United States Patent [19]

Gregory et al.

[11] **3,827,471**

[45] **Aug. 6, 1974**

[54] **FLEXIBLE TRANSPORTING CONTAINERS**

[75] Inventors: **Gerald H. Gregory,** Surrey, British Columbia; **Donald W. Benedict,** Beach Grove, British Columbia, both of Canada

[73] Assignee: **False Creek Industries Ltd.,** Vancouver, British Columbia, Canada

[22] Filed: **Sept. 18, 1972**

[21] Appl. No.: **290,108**

[30] **Foreign Application Priority Data**

Oct. 18, 1971 Great Britain 48450/71

[52] **U.S. Cl.** **150/2**

[51] **Int. Cl.** **A01g 19/06**

[58] **Field of Search** ..... 150/52.7, 25, 2.2, 48, 150/2; 292/283, 284; 24/73 PA

[56] **References Cited**

UNITED STATES PATENTS

293,083	2/1884	Rhule	292/283
535,636	3/1895	Strader et al.	150/25
663,253	12/1900	Bowman	150/2
681,169	8/1901	Hamilton	150/2
719,810	2/1903	Jones	150/2
824,514	6/1906	Stine	150/2
833,383	10/1906	Guinther	150/2
953,009	3/1910	Ogburn	150/2 X
1,087,702	2/1914	Van Patten	150/48
1,337,859	4/1920	Tipton	150/2
1,355,740	10/1920	Friend	150/2
1,383,955	7/1921	Kiley	150/2
1,952,900	3/1934	White	150/2 X
2,071,745	2/1937	Higginbottom	229/60 X
2,384,974	9/1945	Smith	150/2

Primary Examiner—Herbert F. Ross

Attorney, Agent, or Firm—Fetherstonhaugh & Co.; Kellard A. Carter

[57] **ABSTRACT**

A container in the form of a tube-like bag open at the top and bottom and having a bottom section that can be folded over the lower end of the bag and up the side of the latter. Securing means releasably connects the folded-over bottom section to the side of the bag. The container can be rolled or folded up for storage and shipment, and it can be opened into tubular form and filled with particulate material through the upper end thereof. Release of the securing means when the bag is lifted up or suspended allows the bottom section to straighten out and the material to discharge from the container.

8 Claims, 12 Drawing Figures

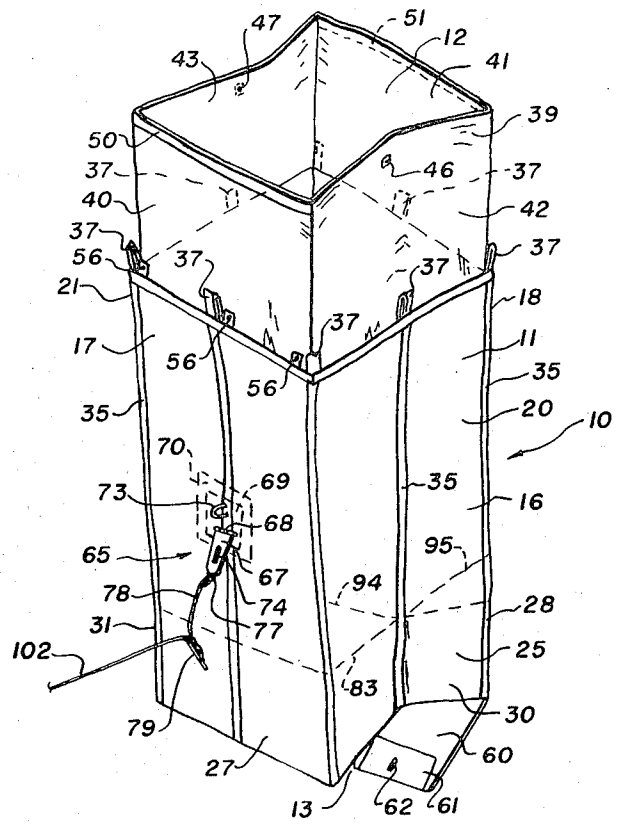

Fig. 1.

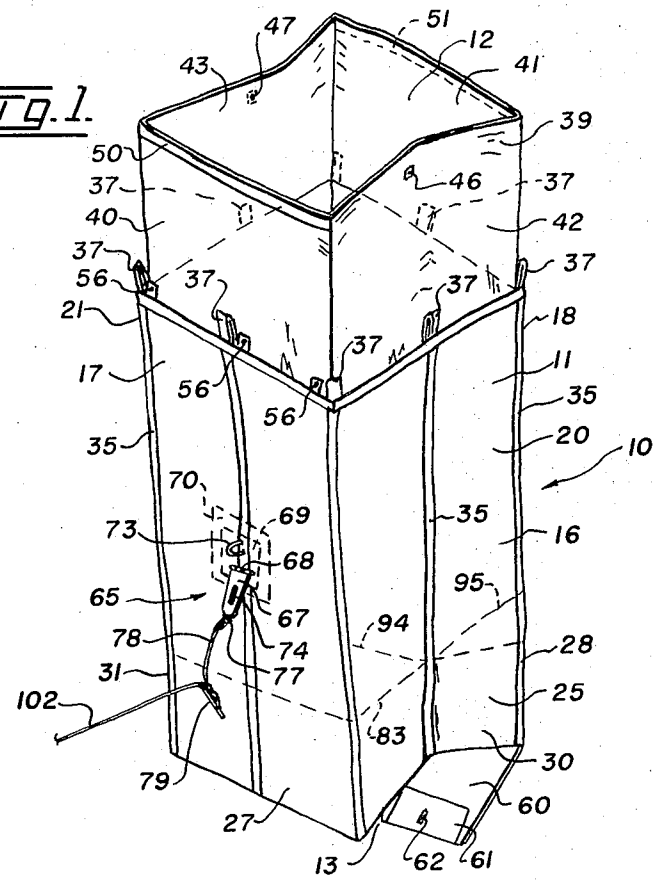
47
51
12
43
41
39
50
46
37
37
40
42
37
37
56
37
37
21
18
37
17
11
56
56
35
35
20
10
70
69
35
73
16
68
65
95
67
94
78
74
28
31
77
25
102
83
30
79
60
27
13
62
61

Fig. 2.

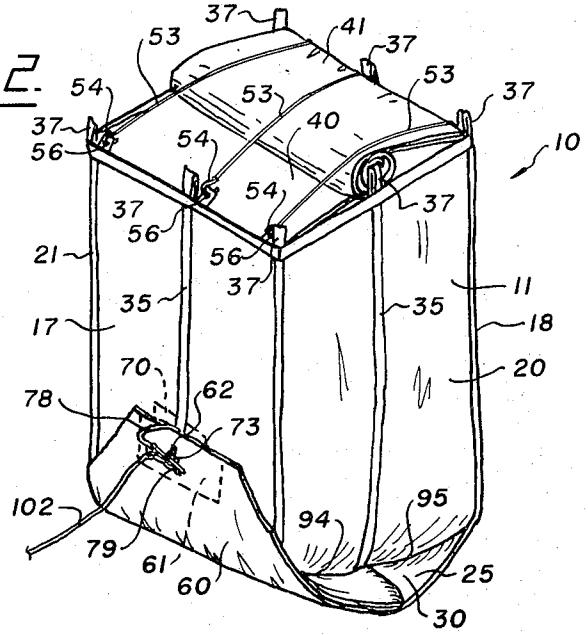
37
53
41
37
53
54
53
37
37
40
10
56
54
54
37
37
56
56
21
37
11
35
35
17
18
70
20
62
78
73
102
94
95
79
61
25
60
30

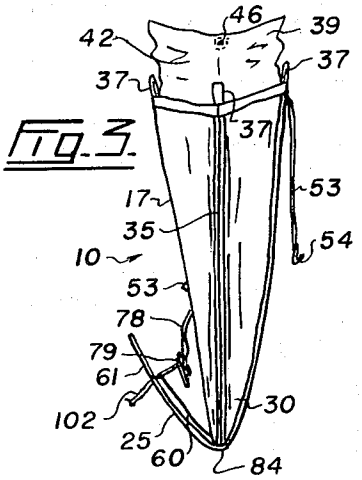

Fig. 3.

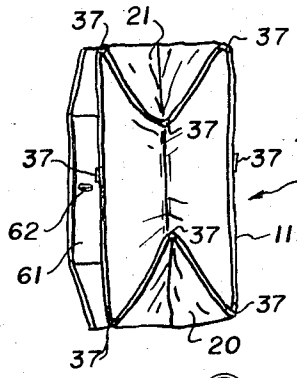

Fig. 4.

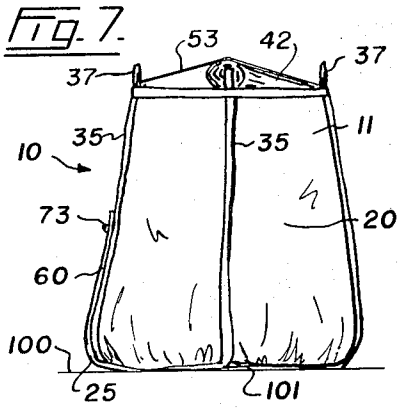

Fig. 7.

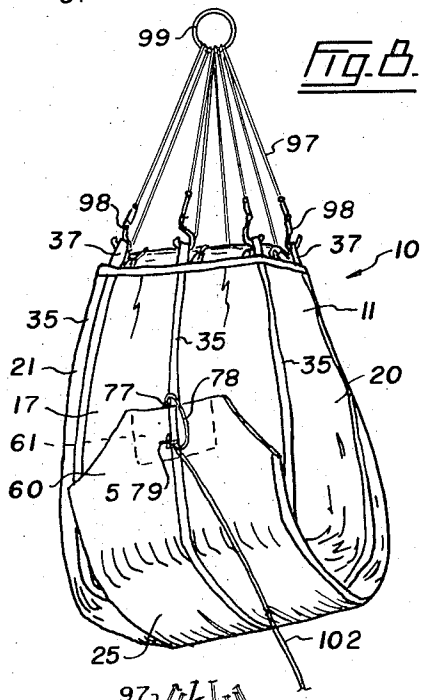

Fig. 8.

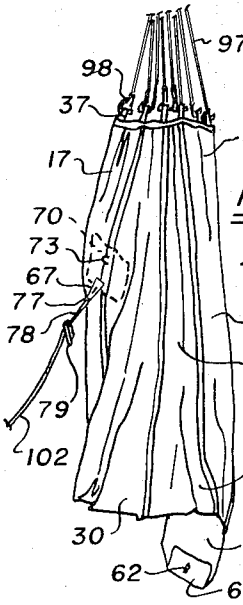

Fig. 10.

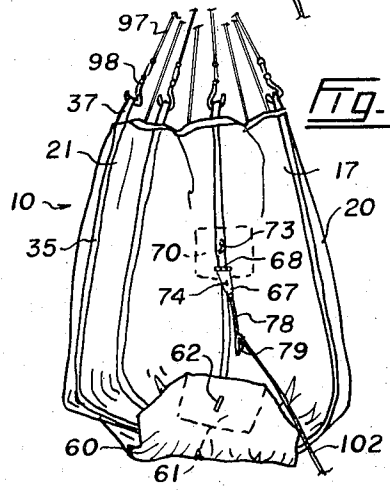

Fig. 9.

FIG. 5.

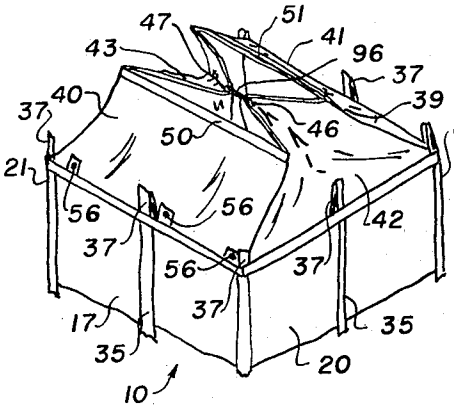

FIG. 6.

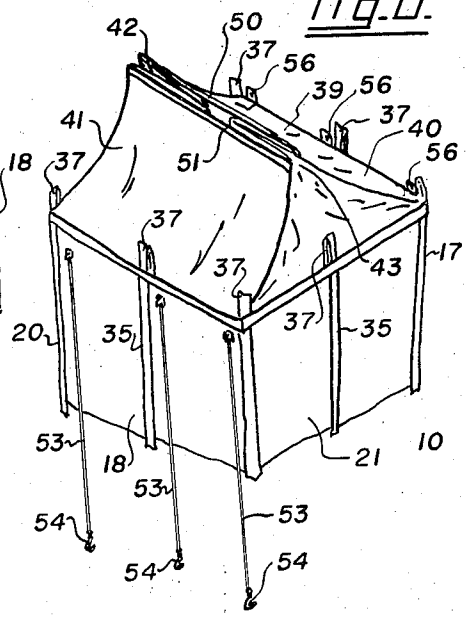

FIG. 11.

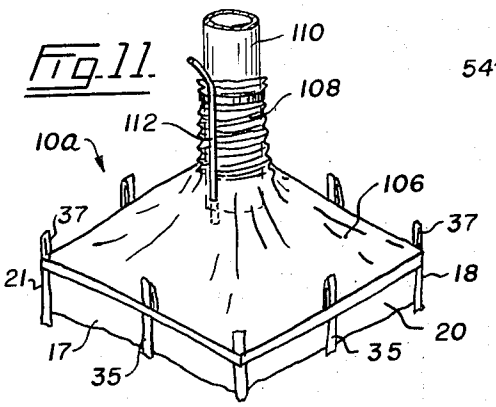

FIG. 12.

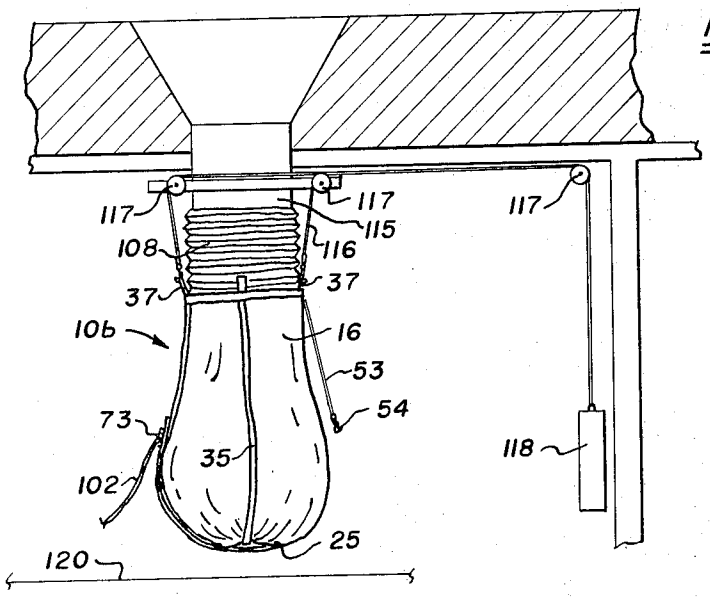

FLEXIBLE TRANSPORTING CONTAINERS

This invention relates to flexible containers for transporting material in particulate form, and particularly materials such as ore concentrates, cement, fertilizer, bentonite, iron pellets, and other materials that are shipped in bulk form.

This transporting container is particularly designed for heavy particulate material, for example, ore concentrates, and for the sake of convenience will be described herein relative to ore concentrates. However, it is to be understood that the transporting containers can be used for any particulate, granular, or bulk transportable material.

At the present time, a great amount of ore concentrate is transported by truck, rail, vessel and aircraft around the world. The methods by which these materials are handled and shipped have not changed substantially over the years despite the many known disadvantages of these methods.

Ore concentrates are shipped from the mine to the smelter. The ore may be transported directly to the smelter by one conveyance, but more often there are numerous changes of conveying vehicles. For example, the ore is often transported by truck to a rail head, by rail either to the smelter or to a tide water port from which it is transported to an overseas smelter. There are numerous problems involved in handling the heavy ore concentrates, abd losses due to spillage and dusting are great.

For example, a concentrate, such as copper concentrate, when transported from the mine to the smelter, rail head or port must be transported in specially constructed semi-trailer trucks. This is due to the fact that the concentrate is a very heavy material, and in order to achieve acceptable axle loadings, special trucks are used and the bodies thereof are usually constructed of aluminum in order to reduce the overall weight. A serious drawback with such vehicles is that they cannot be used to transport many materials which must be hauled back to the mine and, therefore, additional trucks must be used to transport mill equipment and supplies. As these second transports are not acceptable for the transport of concentrates, many of the trucks used carry payloads in one direction only.

When the trucked ore concentrate reaches its destination, it is dumped from the semi-trailer into a suitable receiver. This dumping process results in some additional loss. When the material is transported in a gondola or open rail car, there are additional losses. Losses in the total transportation systems have been reported as high as 1.5 percent. As the value of copper concentrate is something of the order of $250.00 per ton, the losses which occur between the mine head and the smelter can be serious. Furthermore, materials such as copper concentrate must be kept dry. When copper concentrate is rained upon the material can very quickly approach a slurry state which can leak out of the truck or railroad car, thereby increasing losses. More important, however, it becomes an extremely difficult material to handle. Concentrate with excessive moisture content should not be loaded in a cargo vessel because of its thixotropic characteristics which make it dangerous in the vessel hold.

There are numerous prior shipping containers in existence, but these are not completely satisfactory for use with heavy particulate material such as ore concentrates. Some of the difficulties are cost of the containers themselves, problems in rapid loading and unloading, strength of the containers and their ability to stand up under the prevailing conditions, and the problem and cost of returning empty containers to the source of the material to be transported.

The purpose of the present invention is to eliminate or greatly reduce the numerous problems set out above. A transporting container in accordance with this invention comprises a tube-like bag having a peripheral wall forming a main holding section, a tube-like bottom section aligned with and connected to a lower end of the bag wall, said bottom section being foldable over and across the adjacent end of the holding section and upwardly along the outer surface of the peripheral wall to close the end of the holding section, and releasable securing means co-acting between the bottom section and the adjacent peripheral wall of the holding section releasably to secure said bottom section and said wall together, whereby when there is particulate material in the holding section of the bag, the weight of said material pressing against the folded-over bottom section helps to seal the lower end of the bag and yet release of said securing means results in the bottom section straightening out and instant discharge of the particulate material when the bag is supported near the top thereof.

Although this container is in the form of a bag, it can be placed on a supporting surface, such as a pallet, the bed of a truck or rail car, a dock or a deck of a vessel, and it will remain upright. The particulate material within the container bag tends to shift downwardly and outwardly when the container is deposited on a surface so that it shapes the flexible bag into a relatively large substantially flat bottom. The weight of the particulate material tends to seal the lower end of the bag against any possible leakage, and also keeps undue strain off the securing means which is up the side of the bag.

The transporting container is usually loaded when it is supported at the top of the bag which is held open while the particulate material is poured into the bag. As the pouring continues, the bag swells out to its fullest extent while the weight of the material presses against the folded-over bottom section of the bag. The folded-over arrangement of the bottom section is such that much of the strain against the bottom section is taken by the peripheral wall of the bag. In order to unload the container, it is only necessary to release the securing means and, if necessary, to start the folded-over portion of the bottom section to swing downwardly, at which time the weight of the material in the bag tends to open up the folded bottom section so that the particulate material will flow freely through the open end of the bag. The securing means can be released while the bag is suspended in the air, or while the bag is resting on a support. In the latter case, the bag is raised to cause the bottom section to straighten out under the weight of the material. This in effect is lifting the bag off the material which stays on the support.

After the discharge of the particulate material, the bottom section can be folded over and secured to the peripheral wall of the bag, and the the container can be rolled or folded into a small bundle for return shipment and storage.

A very substantial advantage of this invention is the fact that ordinary vehicles can be used for transporting these containers, and these vehicles can be used to

transport supplies back to the mine so that they are not running with a payload in one direction only.

The use of these flexible containers greatly reduces the losses associated with the normal transportation system, and this is a substantial benefit to the industry and offsets the cost of the containers, and helps to reduce air pollution caused by dust at numerous intermediate loading and unloading points and during transit. In addition, these flexible containers enclose and protect the product, thereby eliminating the necessity for large warehouses for storage purposes. At the present time, small lots of concentrates are not normally shipped, and the material must be stocked piled in a warehouse prior to being loaded in bulk. The use of these flexible containers makes it possible to load the particulate material as ordinary general cargo or as a partial load and, therefore, the large warehouse is not required.

Preferred forms of the invention are illustrated in the accompanying drawings, in which

FIG. 1 is an isometric view of a transporting container in fully open condition,

FIG. 2 is a view similar to FIG. 1 with the bottom and top of the container closed, this being for illustrative purposes,

FIG. 3 is a side elevation of the empty container in partially collapsed condition and with the bottom section folded over almost to its final latched position,

FIG. 4 is a plan view of the container as shown in FIG. 3,

FIGS. 5 and 6 successively illustrate two stages of the closing of the top of the loaded container,

FIG. 6 being turned around relative to FIG. 5,

FIG. 7 is a diagrammatic view showing the loaded container resting on a flat surface,

FIG. 8 is a diagrammatic isometric view of the loaded container suspended from a crane or the like,

FIG. 9 is a view similar to FIG. 8 but showing the bottom section unlatched and moving towards the open position,

FIG. 10 is another view of the suspended container after the contents thereof have been discharged,

FIG. 11 is an isometric view of the upper end of a container having an alternative cover or closure arrangement, and

FIG. 12 is an alternative way of supporting the container during loading thereof.

Referring to FIGS. 1 to 10 of the drawings, **10** is a transporting container in accordance with this invention which consists mainly of a tube-like flexible bag **11** which has an open top **12** and an open bottom **13**. Although bag **11** may have any desired cross-sectional shape, such as circular or oval, it is preferably substantially rectangular in cross-section when empty, as clearly shown in FIGS. **1** and **2**. Bag **11** has a peripheral wall **16** which is made up of opposed plain front and back panels **17** and **18**, and opposed inwardly foldable side panels **20** and **21**. Container or bag **11** has a tube-like bottom section **25** aligned with and connected to the lower end of peripheral wall **16**. Bottom section **25** is formed with front and back plain panels **27** and **28**, and inwardly foldable side panels **30** and **31**. It is preferable to make bag **11** and bottom section **25** of a single piece of suitable flexible material so that panels **27, 28, 30** and **31** are integrally connected to panel **17, 18, 20** and **21**, respectively. Although not absolutely necessary, it usually is desirable to provide container **10** with a plurality of circumferentially spaced flexible reinforcing strips **35** extending the length of peripheral wall **16** and extending into the bottom section **25**, as shown. In this example, a reinforcing strip is provided at each corner of the bag, and another strip is provided centrally of each of the front, back and side panels. Each strip **35** has a loop **37** formed at its upper end adjacent the upper end at **12** of bag **11**.

Suitable cover means and fastening means are provided for the bag. In this example, the bag is formed with a tubular cover section **39** which is an extension of the bag itself. This cover section has front and back panels **40** and **41**, and side panels **42** and **43**. Grommets **46** and **47** are formed in side panels **42** and **43** near the outer or free edges thereof. Stiffening strips **50** and **51** extend along and are secured to the free edges of front and back panels **40** and **41**. The illustrated container bag has a plurality of resilient straps **53** secured at one end thereof to the back panel **18** of the bag near the back cover panel **41**, see FIG. **6**, each strap having a hook **54** connected to its opposite end. A grommet **56**, see FIG. **5**, is provided on front panel **17** for each hook **54**.

Back panel **28** of bottom section **25** is produced downwardly beyond the other panels of the bottom section to form a flap **60** which actually constitutes part of the bottom part of the container. This flap has a reinforcing piece **61** secured thereto near its free end, and a slot **62** extends through this reinforcing piece and the adjacent portion of the flap.

Suitable securing is provided for container **10**, and in this example the securing means is in the form of a latch **65**. This latch consists of a trigger plate **67** swingably connected by a hinge **68** to a base plate **69** which is secured to front panel **17** of the peripheral wall **16**. It is preferable to provide a reinforcing piece **70** at the point where base plate **69** is secured to the wall panel. A loop **73** is secured to base plate **69** and projects outwardly therefrom, and is positioned to extend through a slot **74** formed in trigger plate **67** near the outer end of the latter when this plate is swung upwardly and inwardly towards the peripheral wall of the bag. A lanyard loop **77** is connected to and projects outwardly from the free end of trigger plate **67**, and a lanyard **78** is secured at one end to this loop and at its opposite end to a locking pin **79**.

When container **10** is not in use, it usually is collapsed so that it can be folded or rolled up for storage or shipment. FIGS. **3** and **4** illustrate bag **11** almost in the completely collapsed state. In order to collapse the bag, side panels **20, 30** and **21, 31** are pressed or folded inwardly and this draws the front and back panels towards each other so that the entire container can be laid flat with flap **60** projecting from one end thereof. Bottom section **25** can now be folded over roughly along the line **83** in FIG. **1** and at **84** in FIG. **3** so that it lies over front panel **17** of the peripheral wall of the bag. At this time, trigger plate **67** is swung upwardly and inwardly to cause loop **73** to project through its slot **74**. Flap **60** is moved towards the bag to cause loop **73** to project through slot **74** of this flap. When pin **79** is inserted through a protruding portion of loop **73**, the bottom section is latched or secured into its bag-closing position. The container may now be folded or rolled up into a compact bundle for shipment or storage.

When it is desired to fill container **10**, the top thereof is supported and held open in any desired manner.

Cover section **39** is held open at this time, and the ore concentrate or other particulate material is directed into bag **11** through the open top thereof. This completely fills out the bag. As the bag fills, the front, back and side panels thereof move outwardly, but since the bottom section **25** of the bag is folded over the lower end thereof and extends part way up the outer surface of peripheral wall **16**, the lower portions of each of the side panels **20** and **21** fold downwardly roughly along the lines **94** and **95**, see FIGS. **1** and **2**, which are arranged approximately in a V relative to each other. When the bag is full, the bottom section is flattened as shown in FIG. **7**. After side panels **42** and **43** of cover section **39** are folded inwardly, see FIG. **5**, they are secured together in any suitable manner, such as by means of a hook **96** hooked into grommets **46** and **47**. Following this, stiffening strips **50** and **51** are brought together, FIG. **6**, and then rolled towards the main portion of the bag, as shown in FIG. **2**, at which time the cover section **39** rolls around these strips until the roll is stopped by the material in the bag. Straps **53** are moved over the rolled cover section and hooks **54** are engaged in grommets **56** to retain the cover section in this rolled position. The ore concentrate is now completely enclosed within the container bag.

The filled bag can be lifted in any desired manner. For example, it can be lifted by a plurality of cables **97** having hooks **98** on their lower ends which engage loops **37** at the upper end of the body of bag **11**. These can be connected to a common ring **99** which may be placed over the hook of a crane or the like.

When the loaded container is placed on a flat surface **100**, as diagrammatically illustrated in FIG. **7**, the ore tends to spread the lower portion of the bag outwardly, as shown, so that a flat bottom **101** is created upon which the load rests. The bag is now quite stable and can be left in this position without any support at the top thereof. At the same time, the weight of the material is on the folded-over portion of bottom section **25** so that there is no possibility of any of the material getting out of the bag, and moisture cannot get into it. It will be noted that the free edge of bottom section **25** is positioned well above the supporting surface at this time so that even if the bag is sitting in water, the latter cannot get into the bottom section. The bottom of the bag is sealed by the weight of the material in it.

FIG. **8** diagrammatically illustrates loaded container **10** as it appears when suspended from a crane or the like. When it is desired to unload the container, it is only necessary to withdraw pin **79** from loop **73**. This can be done, when the container is suspended, by means of a rope **102** connected to pin **79**. When the pin is withdrawn, there is a tendency for flap **60** and bottom section **25** to remain in the closed position. A further pull by means of rope **102** will swing trigger plate **67** outwardly on its hinge **68** to shift flap **60** off loop **73**. At this time, the contents of the bag tend to slip down through tubular bottom section **25** and this swings the bottom section and the flap downwardly until the material freely runs out of the bottom of the bag. FIG. **9** shows the bottom section and the flap moved partly to the fully open position, while FIG. **10** shows these in the fully open position and the bag emptied. The bag now can be folded up as described above and shipped back for another load.

The material to be transported may be of a powdery nature, in which case there is danger of pollution of the air and product loss if this container is loaded and unloaded as described above. An alternative form of container **10***a*, see FIG. **11**, is provided for this purpose. The container bag **11** is provided with a cover section in the form of a flexible cover **106** in place of cover section **39**, said cover **106** being connected to the peripheral wall **16** of the bag almost completely closing the top of the bag. A flexible or collapsible tubular sleeve **108** is secured to cover **106** and opens into the bag. This sleeve is adapted to fit over a spout **110**, which discharges the material to be transported into the bag. The sleeve may be large enough to fit loosely over the spout so as to permit air to discharge from the bag during the filling operation, or it can be clamped to the spout, in which case a flexible vent tube **112** may be provided, and this tube can extend back to the hopper containing the material.

When the container bag is full, sleeve **108** and tube **112** may be rolled up in the same manner as cover section **39** of container **10** and secured in place by straps and hooks similar to straps **53** and hooks **54** or by a suitable flap.

FIG. **12** illustrates a way of supporting a container **10***b* while it is being loaded through a spout **115**. A plurality of cables **116** are hooked to some of the loops **37** and extend upwardly and over pulleys **117** to a common counterbalance **118**.

When the container bag is empty, it hangs with its folded-over bottom section **25** spaced a little above a support **120**. As material is poured into the bag, the latter first fills out as described above, and then as the weight in the bag increases, the bag moves downwardly until it rests on support **120**. This allows the folds of the material of the bottom of the bag to shift into their proper positions before the weight of the material seals the bag bottom. In this way it is not necessary to support the total weight of the load during the loading operation.

It is obvious that container **10** can be supported during loading in the manner illustrated in FIG. **12**.

When it is desired to unload the transporting container with a minimum of dust being discharged to the atmosphere, the latch is released while the bag is resting on a support such as illustrated in FIG. **7**. Then the bag is raised by a crane through cables **98**. As the bag moves upwardly, the bottom section thereof unfolds and allows the material to flow out of the bag on to the support, which may be the bottom of a bin. In all unloading operations there is relative movement between the material and the bag, and in the last-described operation, the bag in effect moves relative to the material, whereas when the container is completely suspended at the movement of discharge, the material moves relative to the bag.

Bag **10**, **10***a* or **10***b* and the elements integrally connected thereto may be formed of any suitable strong and waterproof material. For example, up to 5 tons of ore concentrate have been successfully carried in a bag made from polyvinyl chloride-coated woven polyester material weighing 26 ozs. per square yard. Two-inch nylon braided webbing having a breaking point of 6,000 lbs. has been found suitable for reinforcing strips **35**. Alternatively, these strips can be made of a material that can be welded to the bag material rather than being sewn thereto. Although the bag may have any suitable dimensions, the bag used for up to 5 tons of

concentrate was approximately 3 feet on each side and had a height of about 5.5 feet.

We claim:

1. A container for transporting particulate material comprising a flexible tubular bag of substantially rectangular cross section and having a peripheral wall forming a main holding section, a tube-like bottom section of substantially rectangular cross section and aligned with and connected to a lower end of the bag wall, said peripheral wall and said bottom section having opposed side panels that fold inwardly when the bag is collapsed and having opposed plain other panels, said side panels of the bottom section when the bag is collapsed being foldable inwardly relative to the adjacent end of the holding section, said plain panels of the bottom section being foldable inwardly over said infolded side panels and said end of the holding section to close the end of the holding section and one of said plain panels extending upwardly along the outer surface of the peripheral wall, and releasable securing means coacting between the bottom section and the adjacent peripheral wall of the holding section releasably to secure said bottom section and said wall together, said securing means comprising a trigger plate having a slot therein and hingedly secured to a plain panel of the peripheral wall, a loop secured to said wall and positioned to extend through the plate slot when said plate is swung towards the peripheral wall, a slot formed in said upwardly extending plain panel and positioned to fit over the loop when the bottom section is folded into the closing position with said upwardly extending plain panel overlying the trigger plate, and pin means engageable with the portion of the loop extending through the plate slot and the plain panel slot releasably to prevent the trigger plate and the upwardly extending plain panel from being swung away from the peripheral wall, and when the plate is swung away from the peripheral wall after withdrawal of the pin means said upwardly extending plain panel is moved off the loop to free the bottom section, whereby when there is particulate material in the holding section of the bag, the weight of said material pressing against the folded-over bottom section helps to seal the lower end of the bag and yet when said upwardly extending plain panel is moved off the loop the bottom section straightens out and the particulate wall is instantly discharged when the bag is supported near the top thereof.

2. A container for transporting heavy particulate material, comprising a tube-like bag having a peripheral wall forming a main holding section, a tube-like bottom section aligned with and connected to a lower end of the bag wall, said bottom section being foldable over and across the adjacent end of the holding section and upwardly along the outer surface of the peripheral wall to close the end of the holding section, said folded-over portion of the bottom section supporting the load of the heavy particulate material in the bag when the bag is suspended from the top thereof and the load pressing against said folded-over portion helping to seal the lower end of the bag, securing means in the form of interconnectable and releasable securing members on the bottom section and the adjacent peripheral wall of the holding section respectively, said securing means comprising a slot formed in a portion of the bottom section which extends over the outer surface of the peripheral wall of the bag when the bottom section is folded over into the closing position, a loop secured to the peripheral wall and positioned to extend through said slot when the bottom section is folded over, a trigger plate having a slot therein and hingedly secured to the peripheral wall, said plate being positioned so that said loop extends through the plate slot when the plate is swung towards the peripheral wall, and pin means engageable with the portion of the loop extending through the slots in the bottom portion and the plate releasably to prevent the bottom section and the trigger plate from moving away from the peripheral wall, and when the plate is swung away from the peripheral wall after withdrawal of the pin means said portion of the bottom section being moved off the loop to free the bottom section so that said bottom section straightens out under the load and permits instant discharge of the particulate material during suspension of the bag.

3. A container for transporting heavy particulate material as claimed in claim 2 including a flap secured to and forming part of said one plain panel and extending upwardly along the outer surface of the peripheral wall, said slot of said one planed panel being formed in said flap.

4. A transporting container as claimed in claim 2 including flexible reinforcing strips connected to and extending the length of said peripheral wall and extending into said bottom section.

5. A transporting container as claimed in claim 2 including a tube-like cover section connected to an upper end of the bag wall and foldable inwardly to close the main holding section of the bag.

6. A transporting container as claimed in claim 4 including fastening means for releasably retaining said cover section in the inwardly folded position.

7. A transporting container as claimed in claim 2 including a flexible cover connected to an upper end of the bag wall, and a flexible sleeve secured to said cover and opening into the holding section.

8. A transporting container as claimed in claim 3 including loops connected to upper ends of the reinforcing strips by means of which said bag can be lifted.

* * * * *