United States Patent

[11] 3,582,927

[72] Inventors George Primavera
Yorktown Heights;
Klaus Spiegel, Purdys; James Orr,
Brewster; Werner Neuburger, West Nyack,
all of, N.Y.

[21] Appl. No. 837,634
[22] Filed June 30, 1969
[45] Patented June 1, 1971
[73] Assignee Lester Associates, Inc.
Thornwood, N.Y.

[54] POWER NETWORK DISPLAY PANELS AND CONTROLS
16 Claims, 17 Drawing Figs.

[52] U.S. Cl. 340/225, 40/131, 340/381
[51] Int. Cl. G08b 25/00
[50] Field of Search ..... 340/225, 381; 40/131 D

[56] References Cited

UNITED STATES PATENTS

1,740,129	12/1929	Ungerer	340/381X
2,804,607	8/1957	Nalle	340/225
3,056,121	9/1962	Jackson	340/225

Primary Examiner—John W. Caldwell
Assistant Examiner—David L. Trafton
Attorneys—Robert S. Dunham, P. E. Henninger, Lester W. Clark, Gerald W. Griffin, Thomas F. Moran, Howard J. Churchill, R. Bradlee Boal, Christopher C. Dunham and Thomas P. Dowd

ABSTRACT: A diagram or display board for electrical power networks, comprising indicator modules, in the form of boxlike enclosures containing illuminating lamps and having removable indicator plates on the front, which modules are each mounted on the front of a perforated support panel by two bolts, one insulated and conducting electrical power to the lamps, and the other connected to the panel which acts as common or ground. A nonglare surface is produced on the indicator plates which may be fitted with clips for attachment to the boxes or slidably held therein. The plates and the lamps may be of different colors to distinguish between the various components and temporary changes in system conditions are indicated by flashing the lamps at different frequencies in accordance with the urgency of the attention required. The board is controlled both manually and by computer and the intensity of illumination may be varied for color balance or to adjust to ambient lighting.

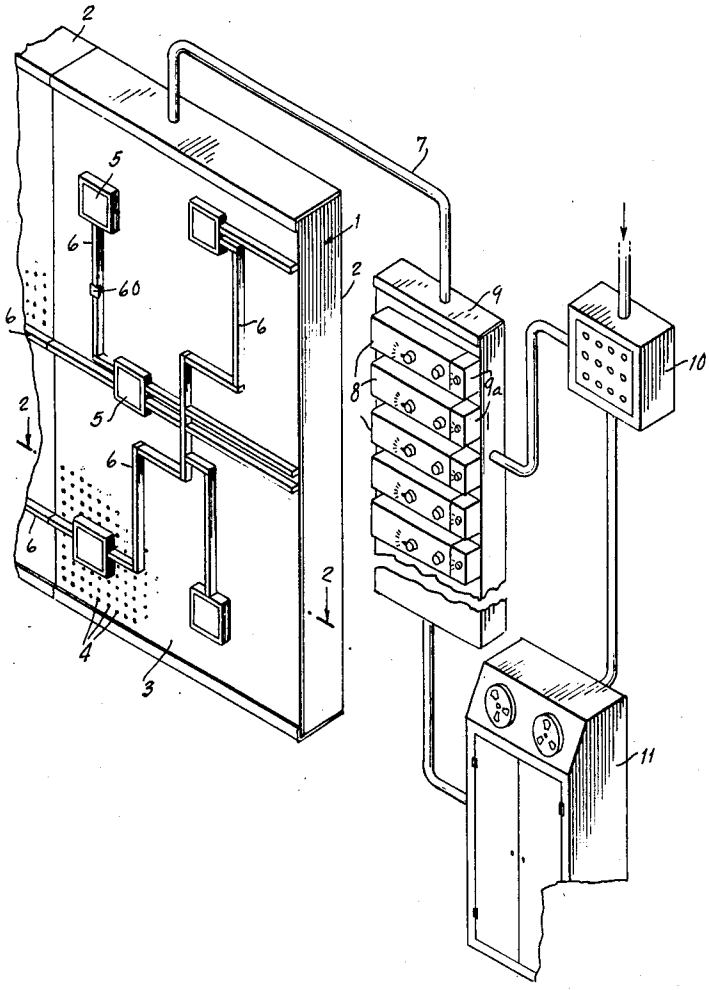

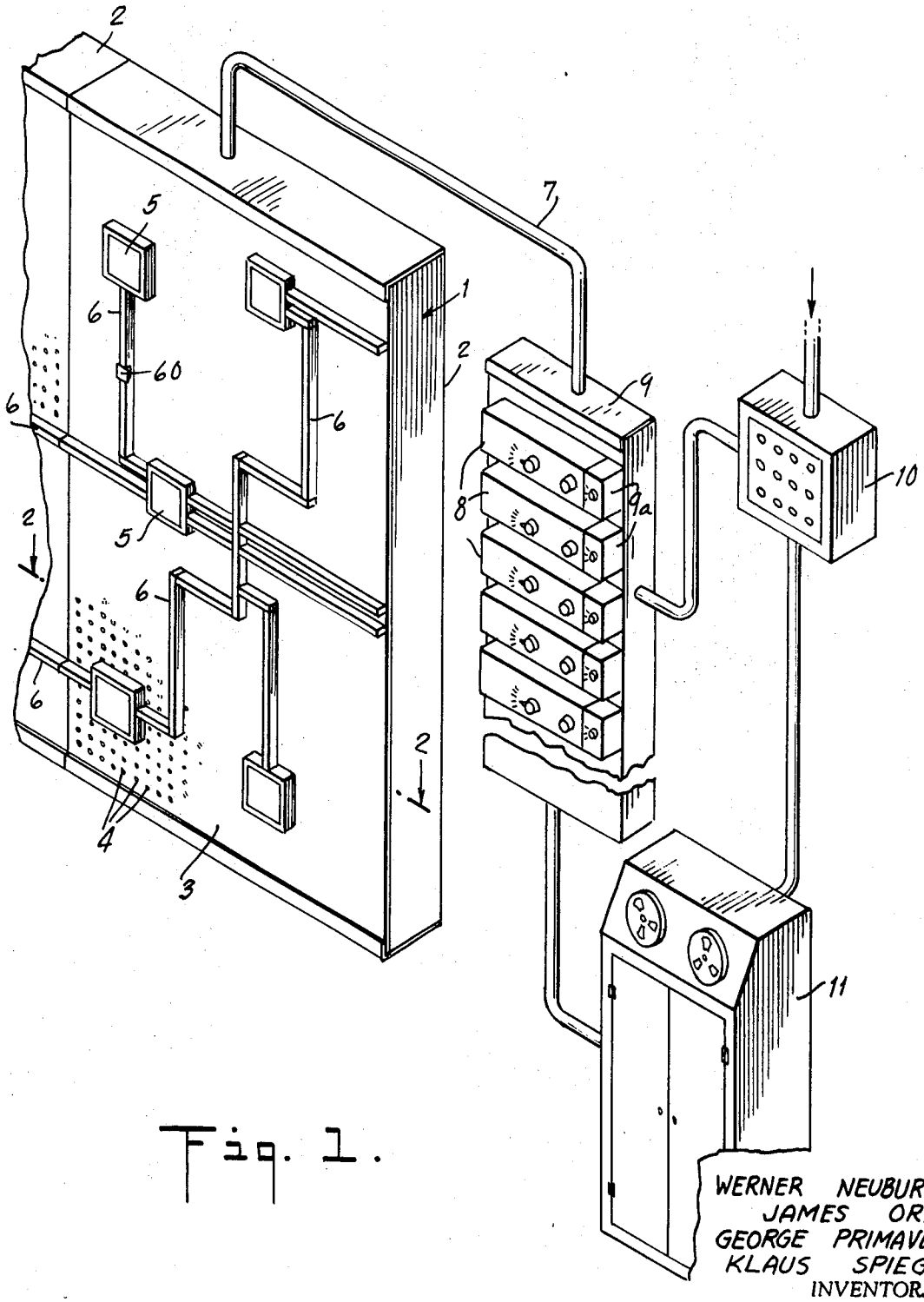

Fig. 1.

WERNER NEUBURGER
JAMES ORR
GEORGE PRIMAVERA
KLAUS SPIEGEL
INVENTORS

BY Lester W Clark

ATTORNEY

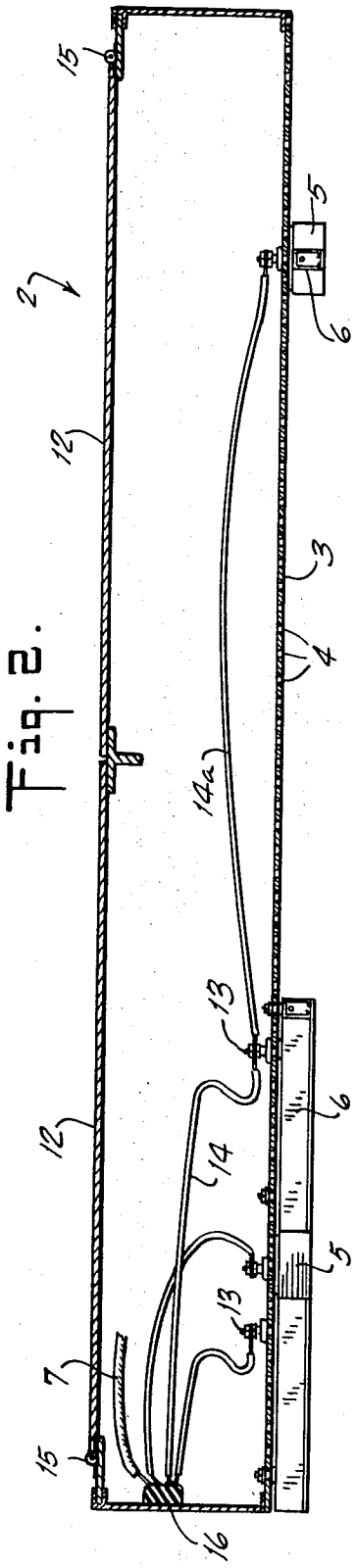

Fig. 2.

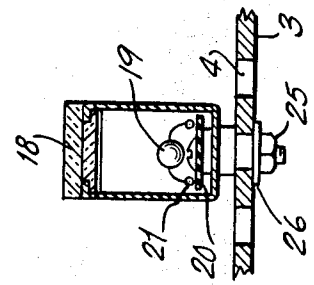

Fig. 4.

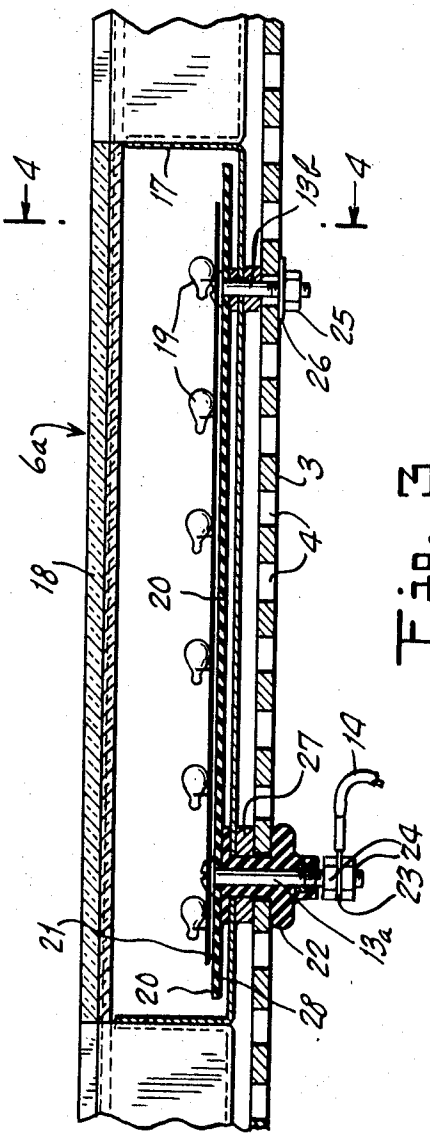

Fig. 3.

Fig. 5.

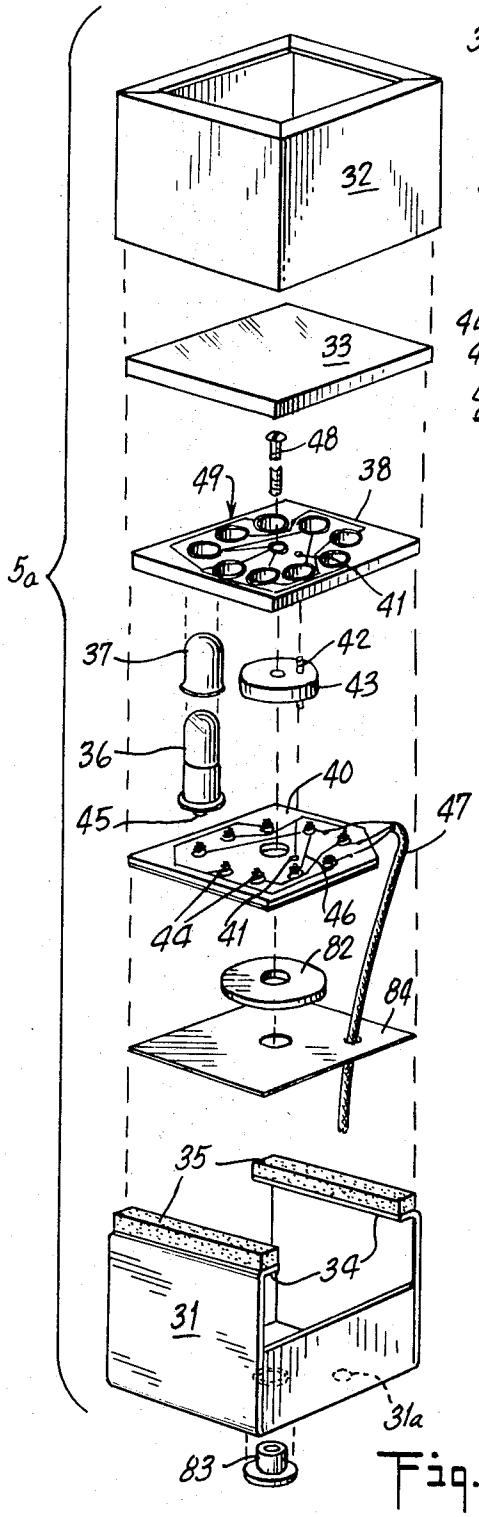

Fig. 6.

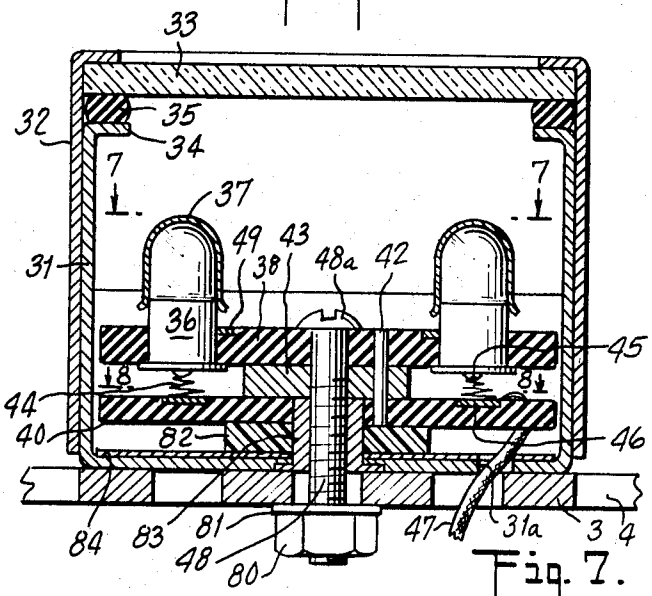

Fig. 7.

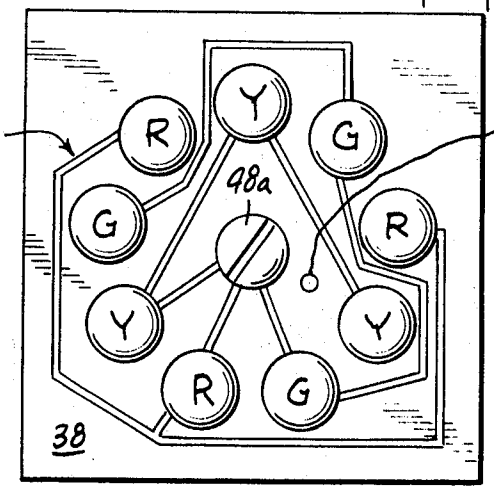

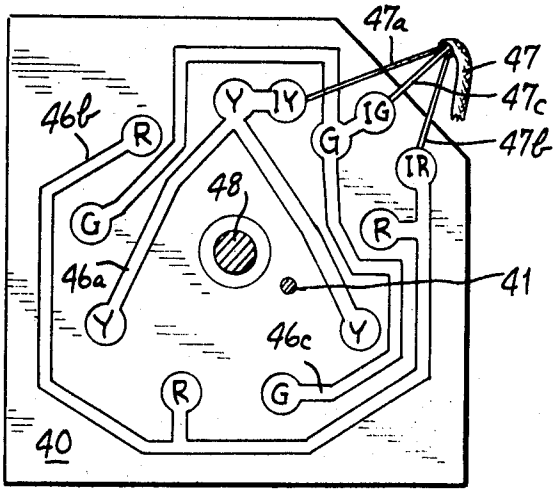

Fig. 8.

Fig. 9.

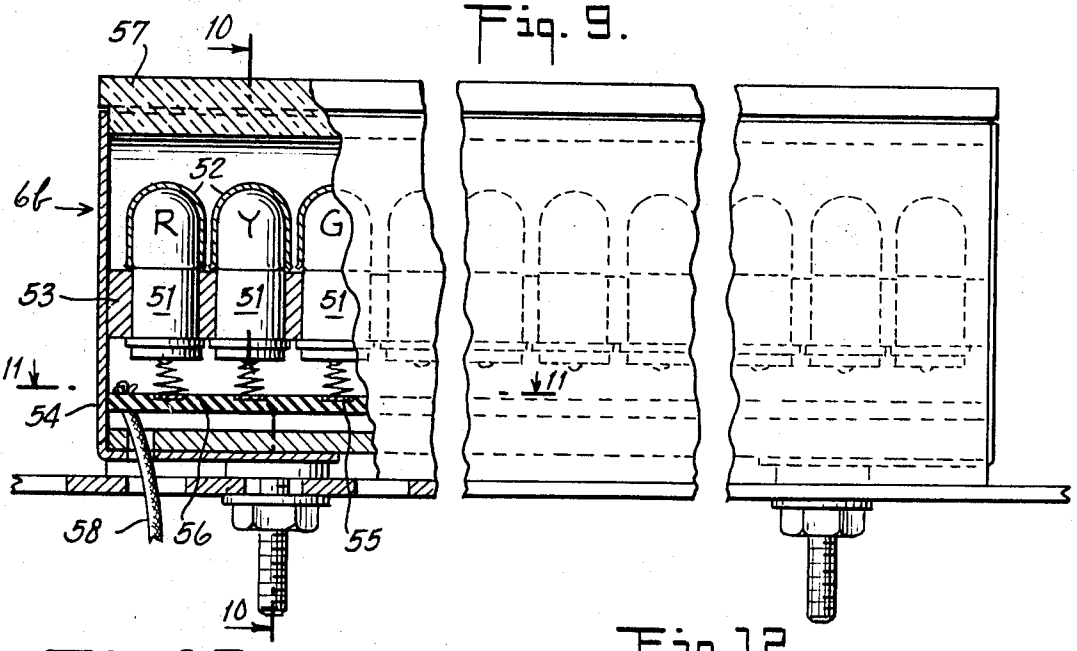

Fig. 10.

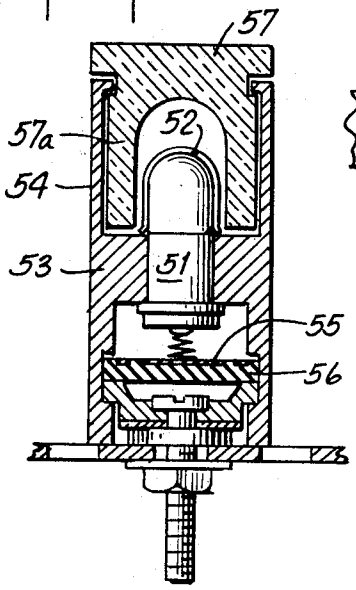

Fig. 12.

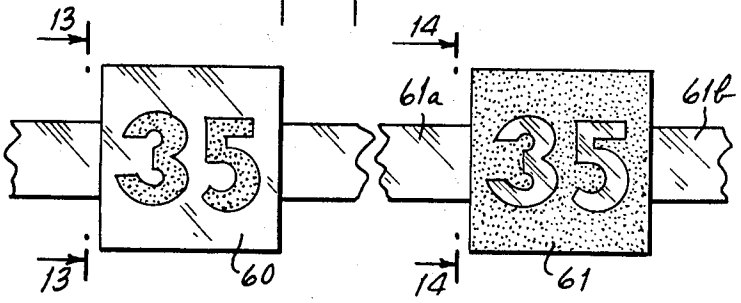

Fig. 13.

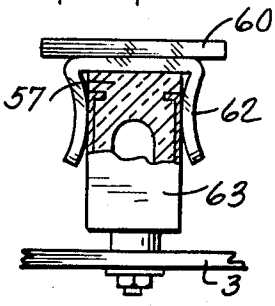

Fig. 14.

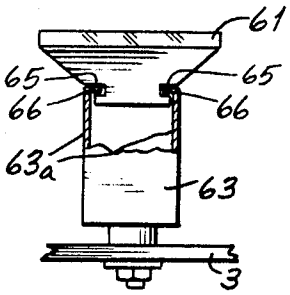

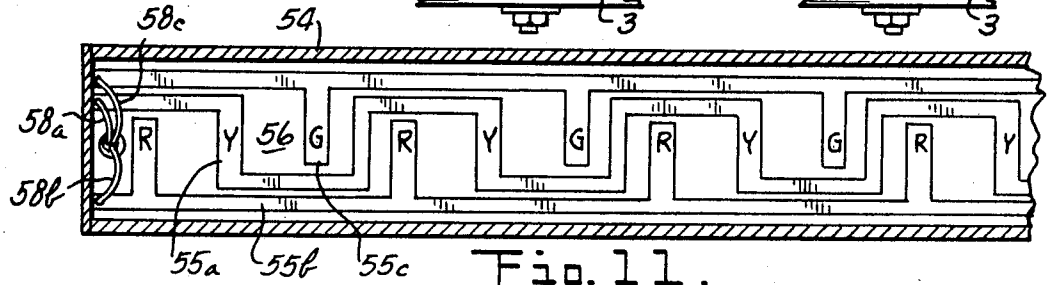

Fig. 11.

Fig. 15.

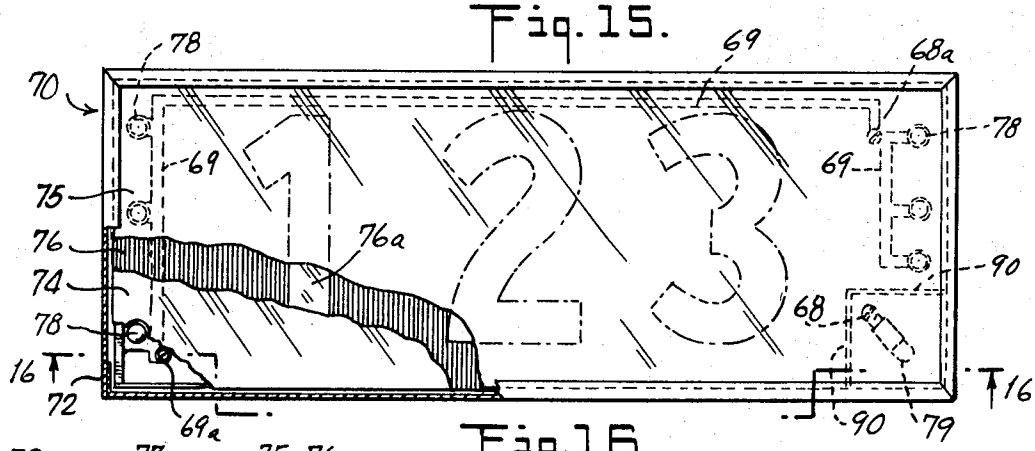

Fig. 16.

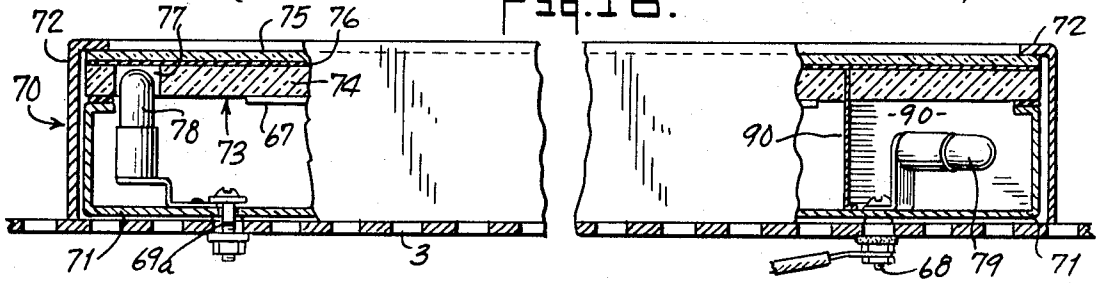

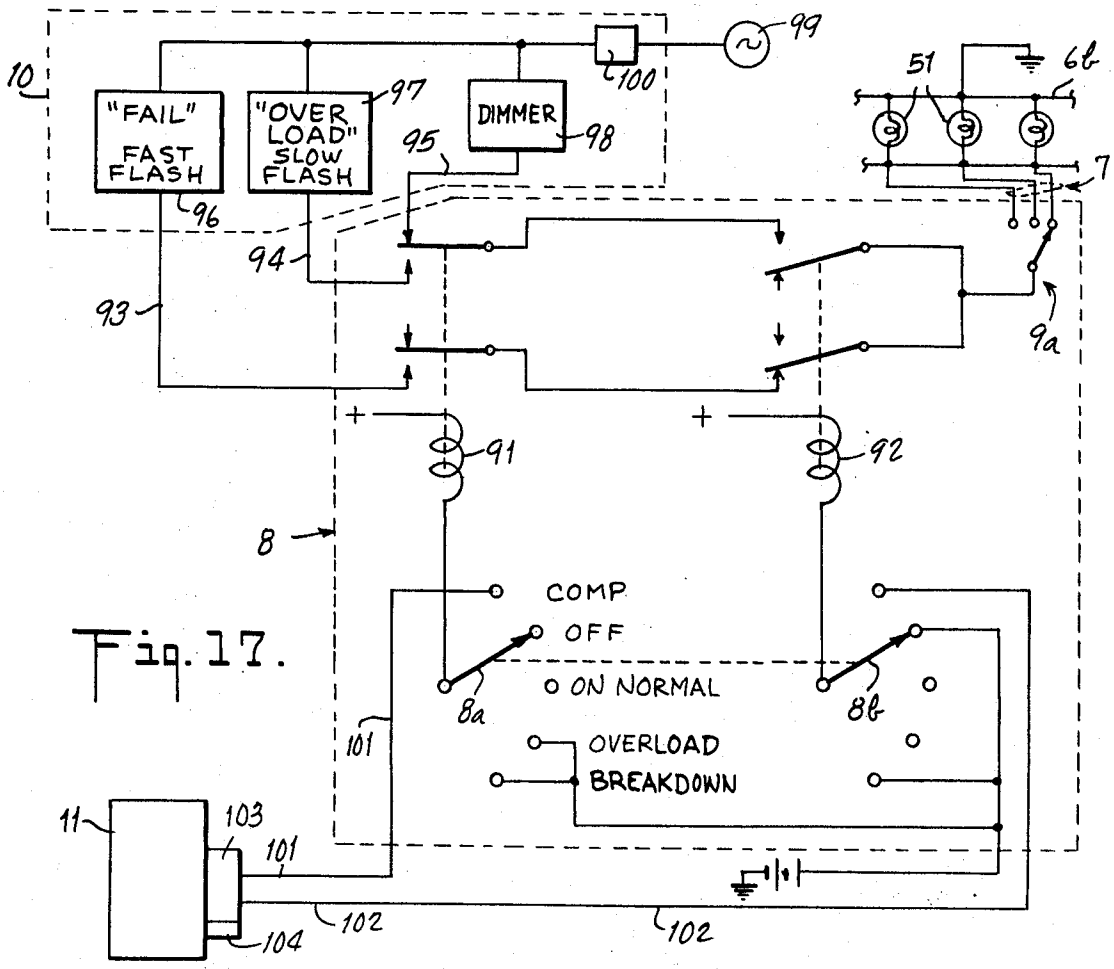

Fig. 17.

POWER NETWORK DISPLAY PANELS AND CONTROLS

BACKGROUND OF THE INVENTION

The present invention relates to system diagram or display boards and more particularly to the construction, mounting and operation of individual indicator modules to be used in combination therewith.

Large display boards are widely used by industry and government to provide a means for representing and monitoring the condition and operation of complicated systems and networks. For example, electric power companies frequently use such boards in a central control room to provide an indication of the location, availability, and the operating interrelationships of the equipment in a large power distribution system.

The individual indicator components which are mounted on the board are generally provided with a legend or symbol corresponding to the system component which they represent and are lighted so that different illuminating effects can be used to distinguish the function or condition of the system component. Thus, a particular color of light may be used to indicate similar system components and the light may be flashed to call attention to an existing condition of the component. Differences in the geometrical shape of the indicator components also may indicate a corresponding system component characteristic.

It is generally desirable that the individual indicator components when mounted on the board be readily variable in both position and character indication; that is, such components should be easy to mount and remove from the board and their indicating symbols or illumination should be capable of rapid variation so that changing conditions can be easily and quickly indicated. In the past, most display boards of this type have been cumbersome and complicated to construct and maintain and have had the illuminating means and the operating equipment mounted behind the display face, causing difficulty in making changes and requiring a large amount of clearance in the space behind the board.

The display board of the present invention is compact and simple in construction and operation, minimizing the space, time and trouble required for maintenance and is extremely versatile and flexible in operation, permitting rapid changes in the indicating symbols and illumination when required.

SUMMARY OF THE INVENTION

The present invention embodies a diagram or display board comprising a perforated facing panel and individual indicator components in the form of boxlike indicator modules containing illuminating means. The modules are fastened on the front of the facing panel by bolts which act as the electrical connections for supplying power to the illuminating means, with the facing panel acting as the common connection or ground. As the electrical input wiring is the only equipment located on the rear of the facing panel, the cabinet portion of the display board may be very shallow, reducing the amount of space required for permanent installation and permitting the entire board to be easily relocated.

Further, the indicator modules are boxlike housings of various shapes and contain one or more lamps or similar illuminating means which may be permanently connected together such as by a printed circuit. Consequently, since the panel acts as common or ground, the amount of rewiring required when a module is changed in position is merely the connecting of an input wire to one of the mounting bolts. Various symbol means, such as translucent indicator plates may be clipped to or slidably received on the front of the module housing to add to the ease of changing the module indications on the board. The faces of the indicator plates are specially treated to prevent soiling during handling and the illumination means are provided with suitable controls for manual or automatic operation. Multicolor light arrangements are also included and flashing techniques are used to provide an additional number of indicating features. In addition, the intensity of illumination may be adjusted for color balance and to accommodate to the ambient lighting.

BRIEF DESCRIPTION OF THE DRAWINGS

FIG. **1** is a perspective view of a display board embodying the present invention with its associated power and control equipment;

FIG. **2** is a sectional view taken along the lines **2–2** in FIG. **1**, showing the interior of the display board;

FIG. **3** is a sectional view of an indicator module constructed and mounted on the display board in accordance with the present invention;

FIG. **4** is a sectional view taken along the lines **4–4** in FIG. **3**;

FIG. **5** is an exploded view of a multicolor indicator module constructed in accordance with the present invention;

FIG. **6** is a sectional view of the assembled indicator module shown in FIG. **5**;

FIG. **7** is a plan view taken along the lines **7–7** in FIG. **6**;

FIG. **8** is a plan view taken along the lines **8–8** in FIG. **6**;

FIG. **9** is a view partly in section, of another multicolor indicator module in accordance with the present invention;

FIG. **10** is a sectional view taken along the lines **10–10** in FIG. **9**;

FIG. **11** is a view taken along the lines **11–11** in FIG. **9**;

FIG. **12** is a showing of two indicator plates for use on the indicator modules constructed in accordance with the present invention;

FIG. **13** is a side view of one of the indicator plates of FIG. **12** taken along the lines **13–13**;

FIG. **14** is a side view of the other indicator plates of FIG. **12** taken along the lines **14–14**;

FIG. **15** is a showing of a further modification of the indicator module with portions broken away to indicate the details of construction;

FIG. **16** is a view of the indicator module of FIG. **15** taken along the lines **16–16**;

FIG. **17** is a schematic diagram of a control system for illuminating the indicator modules in accordance with the present invention.

DETAILED DESCRIPTION OF THE INVENTION

While the display board of the present invention is capable of use in diagramming a number of different systems, such as traffic flow patterns, communication networks, process control and the like, it will be described particularly in connection with an electrical power distribution network comprising power stations and interconnecting power lines.

DISPLAY BOARD

FIG. **1** shows a display board **1** constructed in accordance with the present invention, along with its associated operating controls. MOre particularly, the display board **1** comprises one or more cabinets **2**, each having a facing panel **3** which is provided with a series of perforations **4** to facilitate the mounting of station-indicating modules **5** and line-indicating modules **6** on the front thereof. The cabinets **2** are connected side by side to form the composite board **1**. Electrical power to the board **1** is supplied through a series of lines in cable **7** under the control of individual control modules **8**, which are respectively associated with the individual indicator modules and mounted on a separate control panel **9**. A power panel **10**, containing controls for the entire system, feeds power directly to the control panel **9** for use under manual control, and feeds power through a computer **11** which is used to operate the indicator modules when the board is under automatic control. The control features of the board **1** will be described hereinafter but first, the structural features of the board and indicator modules will be described in greater detail.

FIG. **2** shows the interior of a cabinet **2** with the station-indicating and line-indicating modules **5** and **6**, respectively, mounted on the front. The front of the cabinet **2** comprises the facing panel **3** containing perforations **4** arranged in rows and

columns, although other configurations may be used to adapt to particular applications. The rows and columns of perforations 4 permit vertical, horizontal and inclined mounting of the indicator modules over the entire front of the cabinet 2. The front of the facing panel 3 is generally painted an appropriate color which will blend in with the surrounding equipment and contrast with the indicator modules, as required. The rear of the cabinet 2 is provided with suitable doors 12 which permit access to the interior to secure indicator module mounting bolts 13 and power input wires 14 to the rear of the facing panel 3. The doors 12 may be pivoted on piano hinges 15, as shown, or may be of the sliding type when the operating space behind the cabinet 2 is at a minimum. The interior of the doors 12 is painted black to prevent any light at the rear of the cabinet from appearing through the perforations 4 at the front of the facing panel 3. A terminal strip 16 is provided in the interior of the cabinet 2 through which electrical power from cable 7 is supplied to the power input wires 14 which are connected between the strip 16 and the respective indicator module mounting bolts 13. Wires 14*a* connected between modules may also be used to transmit power through the system.

A particular display board may be constructed of any number of cabinet units of this type, and in varying sizes, as required by merely fastening them together side by side with appropriate electrical interconnections. The indicator modules may be juxtaposed at the edges of adjoining panels to effect continuity in large and complex display systems.

INDICATOR MODULES

With particular regard to the indicator modules, FIGS. 3 and 4 show the structural details of a preferred embodiment of indicator module which, in this instance, is used to represent a section of power line. This line-indicating module 6*a* is elongated in shape and comprises a boxlike housing 17 which may be of any easily fabricated material, such as aluminum. It may be of any appropriate size and painted the same color as the panel 3 so as not to detract from any indicating character or symbol which may appear on the front. The symbol will be contained on a translucent indicator plate 18 which is mounted on the front of the housing 17 in a suitable manner to be explained more fully hereinafter. Illuminating means for the symbol in this case, is a series of small long-life lamps 19 permanently mounted on a circuit board 20 having a printed circuit 21 thereon which connects the lamps 19 in parallel. The circuit board 20 is fastened to the housing 17 and the housing is fastened to the facing panel 3 by means of two mounting bolts 13*a* and 13*b* which are in electrical contact with printed circuit 21. One bolt, 13*a*, is provided with an insulating sleeve, such as a neoprene boot 22, which prevents bolt 13*a* from contacting the facing panel 3 or the housing 17 directly. The electrical input wire 14 has a ring terminal 23 which is connected between two nuts 24 to the interior end of the bolt 13*a* for supplying power to the printed circuit 21 to illuminate the lamps 19. The other bolt 13*b* is fastened to the facing panel 3 by means of a suitable nut 25 and washer 26 and is caused to make electrical contact with the housing 17 and the unpainted rear of the facing panel 3. The facing panel 3 is of metal or other suitable material which will act as a common or ground for the various circuits in the indicating modules mounted thereon.

It will be seen that with such a structural arrangement, the number of mechanical operations which are required to mount and remove the indicator modules from the board is minimized, since only one wire need be connected to each module and the connection can be made simultaneously with the module-fastening operation. In particular cases where only one fastening bolt may be used, only a single operation is required as that bolt may be used to supply the power and a simple contact making an electrical connection between the circuit 21 and the facing panel 3 may be substituted for the other mounting bolt 13*b*.

Further structure may include suitable spacer means 27 provided about the mounting bolts 13*a* and 13*b* between the indicator module 6*a* and the facing panel 3 and a fiberoid insulator 28 disposed on the underside of the printed circuit board 20. The rear of the housing 17 may contact the front of the facing panel 3 directly but since both surfaces are painted an electrical connection will not generally occur. If desired, provision for such connection can be made.

In the event that a shallow installation is required, it will be seen that the present construction of the indicator module lends itself along with that of the cabinet to a considerable reduction in the dimension of the depth which will also lessen the weight of the entire installation.

A further important feature is the dimensioning of the various indicator modules. All the modules have the same dimension in depth, thus providing an indicating space on the board which is flush throughout. The flush arrangement of the front surfaces of all the modules avoids parallax problems so that none of the indicators is hidden from a viewer behind a protruding component. In addition, the line-indicating modules are made in different lengths so that only one module need be connected to the facing panel to represent a long section of line rather than requiring that a number of shorter standard length sections be connected to make up the lines.

MULTICOLOR MODULES

As is is conventional in electrical power system display to use different colors to indicate different voltages in the lines or different equipment conditions or qualities, it is desirable that the indicator symbols or their illuminating means be capable of rapid color alteration to indicate changes in the system. Accordingly, a preferred embodiment of indicator module, representing a power station in this instance, containing multicolor illuminating means, is shown in FIGS. 5 through 7. Multicolor module 5*a* comprises a square boxlike housing 31 which contains the illuminating means and over which a cover member 32 is fitted with the indicator plate 33 disposed between them. The cover member may be press-fitted over the housing 31 or the two may be provided with cooperating dimples to permit positive locking. Suitable flanges 34 are formed on the upper ends of the sidewalls of the housing 31 and have cushioning means 35 thereon for holding the indicator plate 33 in place between the housing 31 and the cover member 32.

The multicolor illuminating means comprises a series of removable lamps 36 arranged in a group, such as shown in FIG. 7 and fitted with appropriate color caps 37 which may be related to each other as indicated, wherein Y represents yellow, R represents red and G represents green. The lamps 36 are fitted through a registration plate 38 having accommodating openings 39 therein and are caused to register properly with a printed circuit board 40 by means of holes 41 in the registration plate 38 and the circuit board 30, into which a pin 42 held on a spacer disc 43 is passed. The circuit board 40 has a number of small springs 44 mounted thereon for receiving the terminals 45 of the lamps 36 and making electrical connection to a suitable printed circuit 46 on the face of the board 40. The printed circuit 46 as shown in FIG. 8 comprises three portions, 46*a*, 46*b* and 46*c* which connect the lamps 36 in parallel according to color, so that when any portion is energized, the three lamps of the same color will light. Three input wires 47*a*, 47*b* and 47*c*, in cable 47, are connected to the three circuit portions to permit individual control and thus three different indications may be rapidly provided with a single indicator plate 33 by means of a simple switch 9*a* (contained in the control panel 9) which selectively energizes any of the three wires. The wires 47*a*, 47*b* and 47*c* may each be connected to individual insulated mounting bolts or be contained in a single cable 47 which passes through a panel perforation 4 and a hole 31*a* in housing 31 as shown in FIG. 6.

A central bolt 48 holds the composite assembly together and fastens it to the facing panel 3. The head 48*a* of the bolt

contacts a printed circuit 49 on the plate 38 completing an electrical connection from the base of the lamps 36 through the bolt 38, its connecting nut 80, and washer 81 to the panel 3 which acts as common or ground. A plastic spacing washer 82, sleeve 83, and an insulating sheet 84 such as fish paper, may be disposed between the printed circuit board 40, the bolt 48 and the housing 31 for mutual insulation.

A modification of the module 6*a* shown in FIG. 3, representing a power line and capable of multicolor operation, is shown in FIGS. 9 through 11. In this elongated module 6*b*, a series of removable lamps 51 are arranged in a line with color caps 52 placed thereon in alternating succession as indicated. A registration plate 53 may be made integral with housing 54 and three portions 55*a*, 55*b*, 55*c* of a printed circuit 55 on printed circuit board 56 are formed as shown in FIG. 11. The indicator plate 57 is in the from of a diffuser having a saddlelike portion 57*a* which fits over the illuminating lamps 51 and three wires 58*a*, 58*b*, 58*c* in cable 58 are connected to the printed circuit portions to give three-color operation under the control of a switch 9*a* in the control panel 9.

INDICATOR PLATES

Turning now more particularly to the construction and mounting of the indicator plates, FIGS. 12 through 14 show two indicator plate embodiments 60 and 61 which are capable of use with indicator modules of the present invention and permit easy and rapid mounting on and removal from the modules for rearrangement on the display board. While the two plates shown, 60 and 61, are intended particularly for marking line-indicating modules and are used in addition to the module indicator plate (such as 57), their features are essentially common to all the indicator plates used.

The indicator plates may be of a translucent material and have opaque portions in the form of the particular symbols to be used, such as in plate 60, or conversely, they may be of opaque material having translucent portions which form the symbols, such as plate 61. In the former case, of course, the translucent plate may be without any symbol, such as when used in a line-indicating module, or suitable masking means may be used for the symbol instead of actually embedding the opaque material in the plate. As shown in FIG. 13 the plate 60 may be fitted on the back with suitable clip means 62 which fit over the face of the module 63 and grip its opposite sides. With this construction, the indicator plate 60 may be easily snapped on and off the various modules on the board without requiring the removal or remounting of the modules. Plate 61, as shown in FIG. 14, may have a backing portion 64 with appropriate grooves 65 therein which receive flanges 66 formed on the upper end of the walls 63*a* of the module 63, so that the plate 61 may be slidably mounted or removed manually from the front of the module 63 without the need for any special tools or other mechanical operations. Plate 61 will ordinarily be inserted between two plain indicator plates 61*a* and 61*b* on the front of the module. As shown in FIG. 13, two types of plates may be used in combination, such that a slidably mounted indicator plate 57 is used under the clipon-type plate 60 to further reduce the number of changing operations necessary. Plates 60 and 61 are of a comparatively thin plastic so as to maintain the flush arrangement of the indicating face. A further modification of an indicator plate and module in accordance with the present invention is shown in FIGS. 15 and 16. This module 70 comprises a boxlike housing 71 which is fastened to the facing panel 3 by an insulated and grounding bolt arrangement and cooperates with a cover member 72 in securing an indicator plate 73 therebetween. The indicator plate 73 in this embodiment is in the form of a laminate comprising a backing plate 74 and a facing plate 75 with a symbol or character sheet 76 disposed between them.

The backing plate 74 is a sheet of clear plastic or glass having upper and lower polished surfaces. Polished clearance holes 77 are provided on the underside to accommodate the illuminating lamps 78 located near the edges of the module 70. The symbol sheet 76 is an opaque film with transparent areas in the form of the desired indicating characters 76*a*. A reflective coating of white paint 67 is provided on the underside of plate 74 in the area beneath the characters 76*a*. The light from the lamps 78 is transmitted through the transparent plate 74 being internally reflected between its polished surfaces until reaching the area with the white reflective coating 67. The coating will reflect the light through the upper surfaces of the plate 74, providing a diffused backlighting for the characters 76*a* on the symbol sheet 76.

The facing plate 76 is of a clear plastic such as an acrylic or a polycarbonate which protects the symbol sheet 76 from being soiled or damaged. While such a plate will ordinarily have a reflective surface which may tend to obscure the character 76*a*, a particular technique in accordance with the present invention is used for modifying the glossy surface of the facing plate 76 to produce a smudge-resistant nonglare satin finish surface. The technique comprise sandblasting the surface of the plate with a grit aluminum oxide, such as NO. 220 and then coating the roughened surface with a cellulose nitrate clear flat lacquer diluted about 50 percent with lacquer thinner. The lacquer is applied by a spray gun at a distance of approximately 9 inches and at a pressure of about 50 p.s.i.g. although a range from 10 to 80 p.s.i.g. may be used, depending on the given situation. One coat is applied horizontally and a second coat is vertically applied, each coat being approximately one-half mil thick. A plate surface so treated resists soiling or smudging which may occur when changing the symbol sheet and during general handling and prevents reflections and glare which might interfere with the viewing of the power indications.

A further feature of the indicator module 70 is the inclusion of a separate indicator lamp 79 in the lower right-hand corner of the module The lamp 79 is located inside baffle plates 90 which penetrate plate 74, to prevent the transmitting of its illumination along plate 74 throughout the front of the module 70. The symbol sheet 76 may be provided with a particular color in the area above the lamp 79, or the lamp may be colored, so that when the lamp 79 is lit to indicate a particular condition, only the corner of the module 70 will be illuminated with the particular color. Thus, a special condition of the system component represented by the entire module 70 can be indicated by merely lighting the lamp 79 requiring no further changing or switching operations.

The lamp 79 can be energized through an insulated bolt such as 68, or a cable connection and the other illuminating lamps 78 are connected in parallel by a printed strip 69 and similarly energized through bolt 68*a* and grounded by bolt 69*a*.

DISPLAY BOARD CONTROL

As previously indicated, the illumination of each of the indicator modules is controlled from a control panel 9 located to the right of the display board 1 as shown in FIG. 1. The panel 9 contains a control module 8 for each indicator module, and each is labeled according to its function and its associated indicator module. The modules 8 are removably mounted and each contains a color-selecting switch 9*a* and two cooperating switches 8*a* and 8*b* which respectively control two plug-in enclosed relays 91 and 92, as shown schematically in FIG. 17. The switches 8*a* and 8*b* can be used to control, for example, a line-indicating module (such as 6*b* in FIG. 9) in two different modes, that is, either manually or automatically in response to signals from a suitable computer 11. In the manual mode, as shown in FIG. 17, the switch settings include off, on-normal, overload, and trip or breakdown. Whether the relays 91 and 92 are under computer operation or manual control, any of the four operating conditions indicated can be achieved, using only a single input signal to each of the relays. Thus, when the switches are in the "off" position, as shown in FIG. 17, relay 92 is energized and relay 91 is open, in which condition the three voltage paths, through lines 93, 94, 95 to the illuminat-

ing lamps **51**, are all open so that the respective module is not illuminated. It should be noted that the "off" setting is used to indicate a system condition rather than cutting off power when not in use.

If the switches are turned to "on-normal" (which is the usual operating position), neither relay **92** or **91** is energized and the voltage path through the line **95** is closed so that the lamps **51** will be lit with a steady light. When the switches are set on "overload," relay **91** is energized and relay **92** is open. In this condition, line **94** is closed, supplying a slow, fluctuating voltage through a modulator component **97** located in power panel **10**. The intensity of illumination of the lamps **51** will then fluctuate at a slow frequency indicating an overload condition. If the switches are set to "breakdown," both relays **91** and **92** are energized, opening the paths **95** and **94** and closing the path through line **93** to the illuminating lamps **51**. The flasher unit **96** (also in power panel **10**) in line **93** will cause a rapid blinking of the illuminating lamps **51**, indicating a trip or breakdown in the represented system power line. The modulator component **97** comprises a very low frequency solid-state oscillator which produces a sinusoidably fluctuating voltage in a range from 20 to 300 cycles per minute while the flasher unit **96** may be a relay which produces a square wave, causing an "on" and "off" blinking of the illuminating lamps **51**.

In addition to the modulating units **96** and **97**, the power panel **10** contains a number of dimmer units, **98**, which permit individual adjustment of the illumination intensities in the various lamps, so that the intensities between the different colors can be balanced and the illumination can be accommodated to ambient lighting conditions. A fluctuation ranging from 20 to 100 cycles per minute can be used for the overload condition and a blink rate of about 300 cycles per minute may indicate the breakdown condition, so that an observer will be immediately alerted to an emergency condition. To acknowledge the lack of operation of the affected system power line, the intensity of illumination may be decreased by means of dimmer **98** or the lights **51** may be put out by turning to the "off" setting. To indicate conditions in a station-indicating module, for example, the lamp **79** shown in FIGS. **15** and **16**, may be operated in the above-described manner.

When the relays **91** and **92** are set on computer operation, a "yes" or "no" energizing signal to each relay can be used to select any of the four conditions automatically. The relays **91** and **92** receive signals from the computer **11** over lines **101** and **102** respectively. The computer **11** is provided with an interface component **103** which decodes the binary output of the computer to properly address the condition instructions to the appropriate indicator modules. The interface **103** may also contain a manual control component **104** which will permit the introduction of manual instructions into the control system when operating on the computer mode by only in the absence of contrary instructions from the computer. The switching circuitry may also include transient suppression circuitry and blocking diodes to protect the computer if necessary. Solid-state circuitry may be used for other control components such as, for example, the relays **91** and **92**, and dimmer **98** as well as the modulator component **97** to minimize the size of the power and control panels. The supply power from source **99** to the panel **10** may be either 240 volt, or 115 volt, or any convenient AC voltage. Transformers **100** in the panel **10**, reduce the input voltages to operating levels of about 24 volts. While the illuminating power may be AC, the relay control voltages should be DC to facilitate operation from a digital computer such as computer **11**.

It will be seen that the display board of the present invention is readily adaptable to diagramming any type of system or network, as the indicator modules may be constructed in any desired shape and are capable of a number of different condition indications using both the indicator plate and the illuminating means in various combinations. The indicator modules, in being mounted on the front of the support panel, are readily accessible for movement, alteration and maintenance. The use of the support panel as the common electrical connection further reduces the time and trouble required for these operations. The flush arrangement of the modules and the nonglare surface on the indicator plates, as well as the shallow cabinet capability, permits the construction of the composite board to be arranged in any desired configuration. As all the important control components can comprise solid-state circuitry, the required space and maintenance are further minimized.

A system display board is thus presented which is simple in construction and operation and yet provides versatility of operation and indication and ease in maintenance and variation.

What we claim is:

1. A display board comprising:

a. a support panel having an electrically conductive surface;

b. a housing mounted on the front face of said support panel and having indicator means thereon;

c. means contained in said housing for electrically illuminating said indicator means; and

d. means for mounting said housing on the front face of said panel, said mounting means and said conductive panel surface being electrically connected with said illuminating means.

2. A display board as in claim **1** wherein said mounting means comprises means for conducting electric power to said illuminating means.

3. A display board as in claim **1** comprising a plurality of said housings containing illuminating means all electrically connected in common with said conductive panel surface.

4. A display board as in claim **1**, wherein said illuminating means comprises a plurality of electric lamps connected to each other by a printed circuit.

5. A display board as in claim **1**, wherein said illuminating means comprises:

e. a plurality of electric lamps of different colors;

f. means for separately connecting lamps of the same color together in circuit; and

g. means for selectively energizing said connecting means to light only lamps of a particular color.

6. A display board as in claim **1**, wherein said indicator means comprises a removable plate on the front of said housing.

7. A display board as in claim **6**, wherein said plate comprises clip means for attachment to said housing.

8. A display board as in claim **6**, wherein said housing comprises means for slidably accepting said plate.

9. A display board as in claim **6**, wherein said plate comprises:

e. a sheet of transparent material having a roughened surface; and

f. a coating of clear cellulose nitrate lacquer on said roughened surface.

10. A display board as in claim **6**, wherein said plate comprises:

e. a facing sheet of transparent material;

f. an intermediate sheet having opaque areas and translucent areas which combine to form indicating characters; and

g. a backing sheet of transparent material having a reflective coating thereon on the side opposite the intermediate sheet and opposite the indicating characters.

11. A display board as in claim **1**, comprising control means for energizing said illuminating means at different frequencies to provide different indications in combination with said indicator means.

12. A display board as in claim **1**, comprising control means for varying the intensity of illumination of said illuminating means.

13. A display board as in claim **1**, comprising: of said

e. a plurality of said housings containing illuminating means;

f. computer means providing binary coded information containing individual control signals for said illuminating means; and

g. an interface for decoding said information to selectively direct said control signals to the individual illuminating means.

14. A display board as in claim **13**, including manually operated means for selectively controlling each of said illuminating means in the absence of a contrary control signal from said computer means.

15. A display board as in claim **1**, comprising a plurality of said housings, all said housings being of approximately the same dimension in depth.

16. An electrical power network display system comprising:

a. a perforated support panel having an electrically conductive surface;

b. a plurality of indicator modules mounted on the front face of said panel;

c. indicator plates removably mounted on the front of said modules, having identifying characters thereon for representing system components;

d. means contained in said modules for illuminating said indicator plates; and

e. a plurality of fastening bolts accommodated in the panel perforations for mounting the modules on the face of said panel, said modules having at least one of said bolts insulated from said conductive surface and conducting electric power to said illuminating means and having at least one of said bolts connecting said illuminating means to said conductive surface, which provides a common connection for all of said illuminating means.

UNITED STATES PATENT OFFICE
CERTIFICATE OF CORRECTION

Patent No. 3,582,927 Dated June 1, 1971

Inventor(s) George Primavera et al.

It is certified that error appears in the above-identified patent and that said Letters Patent are hereby corrected as shown below:

Column 4, line 29, "is", first occurrence, should read -- it --; line 56, "30" should read -- 40 --. Column 5, line 3, "38" should read -- 48 --; line 16, "from" should read -- form --. Column 6, line 11, "76" should read -- 75 --; line 17, "76" should read -- 75 --; line 18, "comprise" should read -- comprises --. Column 8, line 71, cancel "of said".

Signed and sealed this 7th day of March 1972.

(SEAL)
Attest:

EDWARD M. FLETCHER, JR.
Attesting Officer

ROBERT GOTTSCHALK
Commissioner of Patents