Oct. 6, 1964 F. J. SCHULTZ 3,152,236

FUSE CONSTRUCTION

Filed June 16, 1961

Fig. 1

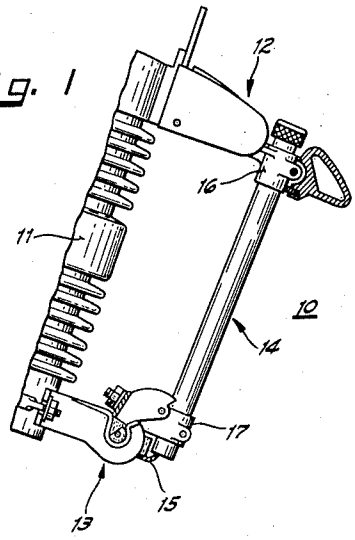

Fig. 2

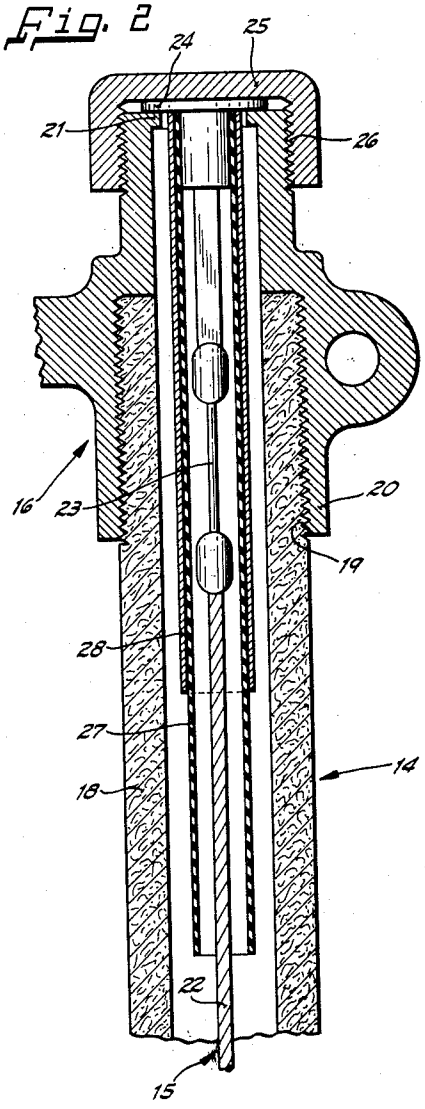

INVENTOR.
Fred J. Schultz
BY
James T. Ryan
Attorney

United States Patent Office 3,152,236 Patented Oct. 6, 1964

3,152,236

FUSE CONSTRUCTION

Fred J. Schultz, Milwaukee, Wis., assignor to McGraw-Edison Company, Milwaukee, Wis., a corporation of Delaware

Filed June 16, 1961, Ser. No. 117,744
3 Claims. (Cl. 200—127)

This invention relates to circuit interrupting devices and more particularly to an improved fuse construction for a fuse cutout of the expulsion type.

Conventional fuse cutouts utilize a fuse construction which includes a fuse link, a gas evolving fusetube and a fuse link tube which is positioned within the fusetube in surrounding relation to a portion of the fuse link. Due to the large ranges of currents (100–4000 amperes) which must be interrupted by present day fuse cutouts a conflict in the design of the fusetube arises. While it is desired to provide a short arc path in a relatively large bore tube for interruption of high currents, it is on the other hand desirable to provide a long arc path in a restricted tube bore for interruption of lower currents. This situation is somewhat resolved thru the use of the fuse link tube, in that low fault currents are interrupted within the confines of the fuse link tube while higher fault currents cause the tube to rupture and are thereby interrupted in the larger fuse tube bore. The success of this scheme is however relatively limited and does not provide for enlarging the bore of the larger tube in order to extend the interrupting rating of the device upward. This then is one of the major disadvantages inherent in contemporary devices.

It is therefore an object of this invention to provide an improved fuse construction for an expulsion type fuse cutout.

Another object of this invention is to provide a fuse construction having improved current interrupting capabilities.

Another object of this invention is to provide a fuse construction wherein the bore of the main fuse tube is partially relieved of low current interruption.

A further object of this invention is to provide a fuse construction in which the length of high current arcs is materially reduced.

A further object of the invention is to provide a fuse construction which is capable of successfully interrupting a wide range of currents.

A still further object of this invention is to provide an improved fuse construction for an expulsion type fuse cutout which is economical to produce, dependable in operation and which at the same time achieves all the foregoing advantages.

Other objects and advantages of my invention will be apparent from the following description of the preferred embodiment of the invention taken in connection with the accompanying drawings in which:

FIGURE 1 is a view in elevation of a fuse cutout incorporating the invention disclosed herein; and

FIGURE 2 is a cutaway portion of a view in elevation of the invention.

Referring to FIG. 1, **10** indicates one form of fuse cutout with which the invention may be utilized. The cutout **10** comprises an insulator **11** which may be made of porcelain or similar insulating material and which is affixed to a supporting member by means of a hanger bracket assembly, neither of which are shown for the sake of convenience. An upper stationary contact assembly **12** and a lower stationary contact and supporting structure **13** are fixedly attached to insulator means **11** at spaced apart locations thereon. A fuseholder assembly comprising a fuseholder **14**, fuse link **15** positioned therewithin and extending out one end of the holder **14**, and

upper and lower fuseholder contacts **16** and **17** respectively, is pivotally mounted in support **13** and adapted to releasably engage the upper stationary contact assembly **12** thru a releasable latch construction which is not shown for the sake of convenience and to shorten the disclosure. The end of the fuse link extending out of the fuseholder **14** is affixed as is customary to the lower contact assembly.

As is conventional, upon a fault within the rating of the cutout, the fuse link will rupture and the fuseholder and its associated contacts will pivot about the support **13** thereby providing visual indication of the condition of the line and cutout as well as insuring a safety air gap. To put the cutout back into service a new fuse is inserted in the fuseholder and the fuseholder is rotated back into circuit bridging position where it is maintained by the latch.

Referring now to FIGURE 2, **14** again designates the fuseholder generally. The fuseholder comprises a gas evolving fuse tube **18** which may be made of melamine impregnated fiber glass or similar materials which are well known in the art.

Affixed to one end of the fuse tube **18** as by screw threads **19** is an apertured ferrule member **20** which may have an inwardly extending upper shoulder portion **21**. A fuse assembly comprising a fuse link leader **22**, fusible element **23** and button head **24** is positioned within the fuse tube **18** so that the underside of the button head **24** contacts the inwardly extending shoulder portion **21** of ferrule member **20**. A cap member **25** which may or may not be pressure responsive is affixed to the ferrule member **20** by means of screw threads **26**. A gas evolving fuse link tube **27** which may be made of fiber or similar material is positioned around the fusible element **23** and a portion of the fuse link leader **22** and contacts the underside of the button head **24**.

Up to this point a conventional fuseholder assembly has been described and as a result the assembly may take a variety of forms. Therefore the particular fuse tubes, ferrule members, fuse links and fuse link tubes utilized should not be construed as a limitation on the invention described herein.

Positioned within the fusetube **18** and surrounding the fuse link tube **27** is a tubular conducting member **28** which may be of metal such as brass or steel or which may take the form of a cylindrical metallic screen. The bore of the conducting member **28** may vary between the outside diameter of the fuse link tube and the inside diameter of the fuse tube. However, to accomplish the desired results the bore of the conducting tube should be such that it fits snugly around the outside of the fuse link tube **27**. By the same token, for best results, the length of the conducting member should be somewhat less than the length of the fuse link tube **27**.

The function of the tubular conducting member will now be explained. On very low fault currents the fusible element **23** is ruptured and an arc is drawn between the ruptured ends of the element within the confines of the fuse link tube. Since the bore of the fuse link tube **27** is exposed to this arc gases are evolved from the tube. The gases so evolved, acting in the small space within the fuse link tube, serve to extinguish the arc. The tubular conducting member **28** serves to reinforce the fuse link tube **27** in the area surrounding the fusible element **23** and thusly increases the current level at which the fuse link tube will rupture. Therefore higher currents may be interrupted prior to rupture of the fuse link tube than have heretofore been possible. Consequently the values of minimum current to be interrupted in the main bore of the fuse tube are increased. As a result the diameter of the main fuse tube bore may be materially increased so as to more efficiently interrupt the higher values of current

without at the same time diminishing the low current clearing ability of the device.

On higher currents the fuse link tube 27 will rupture in that area below the tubular conducting member. Subsequent to rupture, as a result of the heat of the arc, gases will be evolved from the fuse tube to extinguish the arc. To limit the internal pressures due to the high current arc reacting with the gas evolving material of the main fuse tube, the lower terminus of the tubular conducting member serves as a terminus for the arc thus decreasing the overall length of the arc.

It can therefore be seen that the incorporation of the tubular conducting member serves to aid in providing the most optimum conditions for both high and low current interruption. Thru the use of the tubular conducting member on low current operation a relatively long arc is drawn in a relatively confined space; the arc being extinguished by gases evolved from the fuse link tube. On higher current operation the current arc is exposed to the larger bored fuse tube and the arc itself is shortened as a result of current passage thru the conducting member.

Basically then my invention serves to increase the overall current interruption of a conventional fuse cutout thru a simple inexpensive expedient which has none of the drawbacks associated with similar attempts at upgrading the ratings of cutouts.

While one particular embodiment of the invention has been shown and described, it will be obvious to those skilled in the art that various changes and modifications can be made therefrom without departing from the invention and, therefore it is intended for the appended claims to cover all such changes and modifications as fall within the true spirit and scope of the invention.

I claim:

1. In a fuse cutout of the expulsion type, in combination, a gas evolving expulsion fuse tube, upper and lower metallic contacts adjacent the ends of said fuse tube, a fuse link including a fusible element extending axially through said fuse tube, said fuse link including a button head electrically connected to said upper contact and a depending cylindrical shank and being connected adjacent its lower end to said lower contact, an insulating tube of gas evolving material surrounding said fusible element and said depending shank within said fuse tube, a conductive sleeve within said fuse tube closely adjacent said insulating tube along the entire length of said fusible element and having an external diameter substantially smaller than the inner diameter of said fuse tube, said fuse link, said insulating tube, and said conductive sleeve being stationarily mounted relative to said fuse tube, said insulating tube being rupturable as a result of current flow through said fuse link and said conductive sleeve structurally reinforcing said insulating tube and thereby increasing the magnitude of current that can be extinguished in said insulating tube without rupture thereof, the lower end of said insulating tube extending beyond said sleeve and high magnitudes of current flowing through said fuse link rupturing said insulating tube, the gases evolved from said expulsion fuse tube as the result of the arc formed by said higher magnitudes of current extinguishing said arc, said conductive sleeve serving as the terminus for said arc and reducing the length of the arc within said fuse tube, whereby the internal pressure within said fuse tube is decreased.

2. In a fuse cutout of the expulsion type, in combination, a gas evolving expulsion fuse tube, a metallic contact adjacent one end of said fuse tube, a fuse link electrically connected to said contact and including a fusible element extending axially through said fuse tube, an insulating tube of gas evolving material within said fuse tube surrounding said fusible element, a conductive sleeve within said fuse tube circumjacent said insulating tube along the entire length of said fusible element and having an external diameter substantially smaller than the inner diameter of said fuse tube, said fusible element, said insulating tube, and said conductive sleeve being stationarily mounted relative to said fuse tube, said insulating tube being rupturable by current flowing through said fuse link and said conductive sleeve structurally reinforcing the insulating tube and thereby increasing the magnitude of current that can be interrupted in said insulating tube without rupture thereof, one end of said insulating tube extending beyond said sleeve and higher magnitudes of current flowing through said fuse link rupturing said insulating tube, the gases evolved from said expulsion fuse tube as a result of the arc formed by said higher magnitudes of current extinguishing said arc, said conductive sleeve serving as a terminus for said arc and reducing the length of the arc within said fuse tube, whereby the internal pressure within said fuse tube is decreased.

3. In a fuse cutout of the expulsion type, in combination, a gas evolving expulsion fuse tube, a fuse link including a fusible element extending axially through said fuse tube, an insulating tube of gas evolving material within said fuse tube in surrounding relation to said fusible element, and a conductive sleeve within said fuse tube closely circumjacent said insulating tube along the entire length of said fusible element and having an external diameter substantially smaller than the internal diameter of said fuse tube, said insulating tube being rupturable as a result of current flow through said fuse link and one end of said insulating tube extending beyond said conductive sleeve and said conductive sleeve structurally reinforcing said insulating tube and thereby increasing the magnitude of current that can be extinguished in said insulating tube without rupture thereof, said fuse link, said insulating tube, and said conductive sleeve being stationarily mounted relative to said fuse tube, high magnitudes of current flowing through said fuse link rupturing said insulating tube and the gases evolved from said expulsion fuse tube as a result of the arc formed by said high magnitudes of current extinguishing said arc, said sleeve serving as a terminus for said arc and reducing the length of the arc within said fuse tube, whereby the internal pressure within said fuse tube is decreased.

References Cited in the file of this patent

UNITED STATES PATENTS

2,102,882	Boothe	Apr. 12, 1937
2,247,702	Ramsey	Nov. 13, 1939
2,290,733	Boothe	Jan. 27, 1940