Nov. 9, 1937. C. O. ROOSE 2,098,432

SYSTEM AND MEANS FOR AUTOMOBILE IDENTIFICATION

Filed Dec. 30, 1935

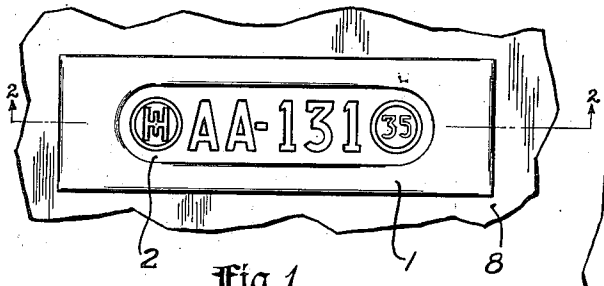

Fig. 1

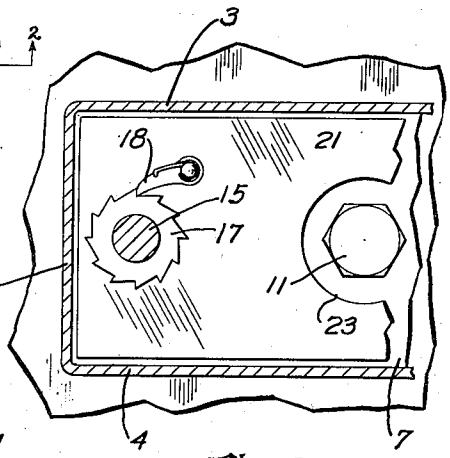

Fig. 3

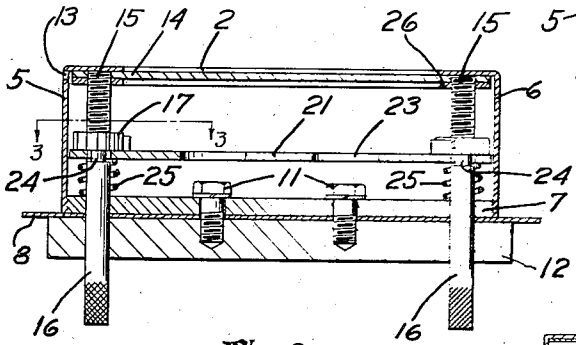

Fig. 2

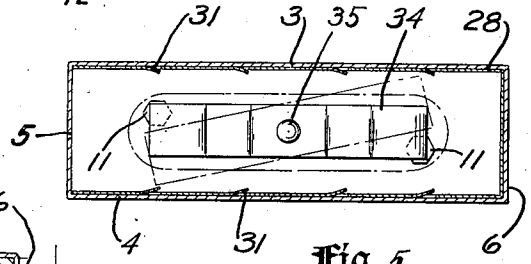

Fig. 5

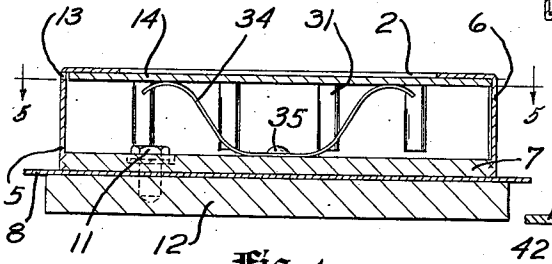

Fig. 4

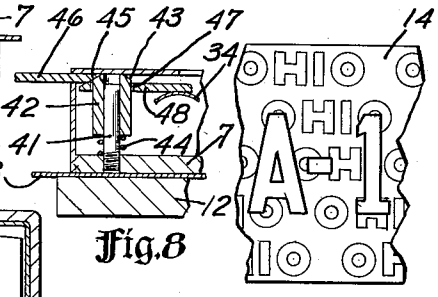

Fig. 8

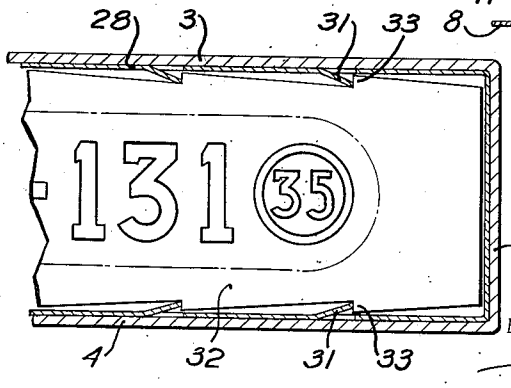

Fig. 6

Fig. 7

INVENTOR,
Clyde O. Roose,
BY Justin W. Macklin,
ATTORNEY.

Patented Nov. 9, 1937 2,098,432

UNITED STATES PATENT OFFICE

2,098,432

SYSTEM AND MEANS FOR AUTOMOBILE IDENTIFICATION

Clyde O. Roose, Elyria, Ohio

Application December 30, 1935, Serial No. 56,666

7 Claims. (Cl. 40—125)

This invention relates to a device for receiving and permanently holding identification tags for automobiles or other periodically licensed vehicles or articles.

One object of the present invention resides in the provision of an inexpensive receptacle for permanently holding identification tags which receptacle may be easily and quickly applied to a dashboard or other prominent interior portion of an automobile and which cannot be removed therefrom after the first identification tag has been placed in the receptacle without destroying or defacing the said receptacle.

Applicant is aware that others have attempted to produce identification tag receptacles but with inconsistently successful results for various evident reasons.

Some devices have been provided with a lock so that only the owner of the car can have access to the receptacles. In many instances the person in possession of the key for the lock will transfer his plates to another car to avoid purchasing more than one set of license plates. Thousands of dollars annually in license fees are withheld from the state by such persons. The present invention however, prevents even the owner from removing or otherwise transferring his plates.

Other devices are permanently welded to the dash or other prominent surfaces which requires the tools and the skill of a mechanic to apply and which usually results in blistering, discoloring or otherwise defacing the finish around the receptacle so that it is difficult or impossible to restore this surface to its original appearance especially on grained panels without entirely refinishing the surface.

The present invention however, may be conveniently and quickly mounted on any machine by any person who is capable of drilling a few small holes in a panel or plate and securing the receptacle thereto by mounting screws. After the receptacle has been mounted and the first identification tag has been inserted, the said receptacle cannot be removed from its mounted position without breaking or otherwise revealing marks of unauthorized tampering.

Another object of the invention is to provide a device for receiving an identification tag which permits the tag to be easily and quickly inserted without the use of tools, but which prohibits subsequent removal thereof.

A further object of the invention is to provide a receptacle for retaining a plurality of identification tags so that only the numerals on the last tag inserted are visible.

Still another object is to provide a receptacle for permanently holding and enclosing a plurality of identification tags and having a resilient means to prevent rattling of the tags within the receptacle.

Another object is to provide a device which will facilitate an accurate check on proper vehicle identification which will discourage automobile thieves and consequently reduce the theft insurance rates.

A still further object is to provide a receptacle for maintaining and preserving an accurate individual history of each car over a period of several years.

The present invention holds each tag in rotation, and the history of the vehicle can be traced by those authorized to open the device and examine the numbers and the States' registration records.

A similarly constructed receptacle may also be used to hold the present types of State license plates to prohibit removal and interchangeability of these plates.

Other objects will be apparent from a consideration of the following description which is taken in conjunction with the accompanying drawing, in which—

Fig. 1 is an elevation of the device as it appears mounted on a panel.

Fig. 2 is a horizontal sectional view at the plane indicated by the line **2—2** of Fig. 1.

Fig. 3 is an enlarged fragmentary sectional view at the plane indicated by the line **3—3** of Fig. 2.

Fig. 4 is a horizontal sectional view through one modification of the device.

Fig. 5 is a sectional view taken substantially on the line **5—5** of Fig. 4.

Fig. 6 is an enlarged fragmentary sectional view showing how an identification tag may be held in place within the receptacle.

Fig. 7 is a fragmentary view of a proposed identification tag.

Fig. 8 is a fragmentary sectional view showing another modification of the tag holding device.

Referring to the Figs. 1, 2 and 3, the receptacle indicated by the numeral **1** is shown comprising a substantially rectangular metallic box having one face thereof provided with a suitable aperture **2** through which the numerals on one of the identification tags are revealed. The sides **3** and **4** and the ends **5** and **6** of the receptacle surround the tags and the mechanism which will hereinafter be described in detail.

An inclosing plate **7** may be welded or otherwise

permanently joined flush with the sides and ends of the box as clearly shown in Fig. 2. Since the plate 7 acts as a mounting medium for the receptacle the said plate may be made of heavier material than the remainder of the box to preclude anyone from removing the receptacle from the panel.

The receptacle may be mounted on a dashboard indicated at 8 in any convenient manner as by screws 11 which project through suitable registering openings drilled in the inclosing plate and the dashboard, and which are secured to a back plate 12 through suitable tapped openings therein.

The back plate 12 is concealed behind the panel or dashboard 8 and is preferably made of heavy steel to provide sufficient reinforcing for the relatively light-gage material of the dashboard, and to make removal of the mounted receptacle an extremely difficult matter even by prying and wedging.

The threaded openings in the plate 12 are preferably blind or concealed from one side of the plate so that the mounting screws 11 cannot be turned or otherwise tampered with even from the rear of the panel.

Through the aperture 2 the heads of the mounting screws are accessible prior to the insertion of an identification tag. After the first tag has been placed within the receptacle, however, the screws are permanently concealed within.

The tags 14 may be inserted in the receptacle through a slot, as at 13, in one of the ends or sides, and may be held in place by suitable threaded openings adapted to engage tag retaining screws 15.

These screws are preferably rotatable by knurled stems 16 which may be attached thereto and which project through the back plate 12. By rotating the stems 16, the tag is urged inwardly along the threads of the screws 15.

The stem is prohibited from being rotated in but one direction by reason of a conventional ratchet, as at 17, and a dog or pawl 18. The ratchet may be secured to the stem 16 or screw portion 15 in any desirable manner, and the dog 18, which normally engages the teeth on the ratchet, is pivotally mounted on a member, such as a floating intermediate plate 21, shown in Fig. 3.

To preclude further tampering of the device in an effort to remove any or all of the tags within the receptacle by attempting to force the stem in the opposite direction against the dog and ratchet arrangement, the retaining screws may be provided with a narrow neck portion, as at 24, preferably located intermediate the ratchet and the stem portion. This neck portion may be designed to yield and break off under an abnormal load leaving the severed end lying at a safe distance within the receptacle.

Access to screws 11, for mounting of the receptacle, is provided through suitable openings 23 in the intermediate plate 21 which register with the heads of the screws, as indicated in Figs. 2 and 3.

The screws 15, together with the identification tag, are urged against the interior surface of the plate having the aperture 2 by means of coiled springs 25 surrounding the stems 16 and located between the intermediate plate 21 and the enclosing plate 7. The distance of travel permitted by the spring 25 is preferably confined to barely permit the insertion of a single tag. Thus, before another tag can be placed within the container, the ends of the retaining screws 15 must have passed through or at least lie flush with the outer surface of the last inserted tag.

Directly behind the identification tag is shown a transfer plate 26 having threaded openings similar to those in the identification plate for engaging threads in the screws 15 and also having an opening similar to the aperture 2. This transfer plate provides a convenient means for properly conducting the first identification tag across the receptacle so that the threaded openings may be more quickly and easily brought into registration with the screws 15. The plate 26 also serves to properly support the inner ends of the screws prior to the insertion of the first identification tag.

To insert a new tag, the innermost end is placed in the slot 13 and the tags already in the receptacle are forced inwardly against the tension of the coil spring 25 to allow sufficient space between the last inserted tag and the aperture 2. The tag is then moved toward the center of the receptacle until it lies wholly within said receptacle. In this position, the threaded openings of the new tag 14 are in register with the retaining screws 15.

The next operation is to rotate the stems 16 a slight amount so that the threads on the screws and on the tag become engaged. This operation locks the tag within the receptacle and prevents anyone from removing it without defacing the tag or the receptacle or both.

In Figs. 4, 5 and 6, the general exterior appearance of the receptacle is essentially identical with that shown in Figs. 1, 2 and 3, and also the method of mounting the receptacle to the dashboard is preferably the same.

The interior of the receptacle, however, is shown provided with a spring steel insert, such as a U-shaped strip 28 which is placed into the receptacle before the enclosing plate 7 is welded in position. The sides of the strip 28 preferably lie adjacent the inner faces of the sides 3 and 4 of the receptacle, and is provided with a plurality of inwardly directed resilient catches as at 31 which may be struck from the strip by means of a forming die. These catches are so directed as to permit insertion of an identification tag, as at 32, but will pevent the removal thereof by interengaging a plurality of teeth 33 suitably spaced to register therewith.

It is apparent from examination of Fig. 6 that after the identification tag 32 has been placed into the receptacle as far as possible, the said tag cannot be removed therefrom without breaking the catches 31 or the teeth 33.

The identification tag is urged against the inner surface of the face plate containing the aperture 2 by means of a leaf spring 34 which may be secured to the enclosing plate 7 by means of a screw or rivet as at 35. This spring may be shifted to the position shown by dotted lines in Fig. 5 to permit accessibility to the screws 11 for the purpose of mounting the receptacle on the automobile.

As each new tag is inserted, the old tags, which lie behind and are concealed by the latest tag, are forced inwardly of the receptacle against the tension of spring 34 a distance equal substantially to the thickness of the tag. Each tag is held and guided within the retainer as it moves inwardly by the catches 31 which may lie throughout the effective depth of the retainer as shown in Fig. 4. The size of the container is preferably such as to

hold a quantity of tags corresponding to the estimated serviceable life of the car.

In Fig. 8 a further modification of a means for permanently holding the identification tags within the receptacle is illustrated in which one or more guide pins as at 41 are secured to the inclosing plate 7 and project toward the opposite face plate of the receptacle. The pins terminate a short distance from the inner surface of the said opposite face plate sufficient to permit the insertion of but one tag therebetween.

Mounted on each of the pins 41 is a sleeve as at 42 which may slide a limited distance on the pin to accommodate the thickness of a tag. The outermost end of the sleeve may be beveled slightly as shown at 43 and may be held tightly against the inner surface of the plate carrying the aperture 2 by means of a spring as at 44.

The entering edge 45 of a tag 46 may be beveled as shown in Fig. 8 to provide a wedge for forcing the sleeve 42 inwardly against the spring and to facilitate inserting the tag. Suitable openings 47 in the tag are adapted to register with the sleeves 42 which snap thereinto when the tag is in the position shown at 48. Since the sleeve is concealed and inaccessible each tag is permanently locked thereby within the receptacle.

The holes 47 and the sleeves 42 are preferably designed and arranged so that the said holes and sleeves will not register and become interengaged until the tag lies wholly within the receptacle. This may be accomplished by methods such as staggering the sleeves 42 and the holes 47 or by making the sleeves and holes of different sizes so that they will register and engage in but one predetermined relative position.

A leaf spring 34, like the one shown in Fig. 4, may be employed to tightly hold the last inserted tag against the outermost plate so that the identification numerals thereon may be clearly visible through the aperture 2.

The method of mounting this receptacle on a dashboard or panel may be similar to the ones disclosed in Figs. 2 and 4, or any other equally inexpensive and effective fastening means.

From the accompanying drawing it will be seen that all of the parts comprising the present invention may be cheaply made in large production quantities by standard automatic machinery.

Although the applicant has shown and described but a few of the possible forms which the device may assume he does not wish to be limited thereto since other modifications may be made without departing from the scope of the present invention as defined in the hereunto annexed claims.

Having thus described my invention, what I claim is:

1. A plurality of identification tags, a retainer for holding said tags, said retainer having an aperture for revealing the characters on one of the tags, means for mounting said retainer on a plate, said means being concealed after the first tag has been inserted, and cooperating locking means on the tags and in the retainer to permanently lock all of said tags within said retainer.

2. A plurality of identification tags, each having a plurality of apertures, a retainer for inclosing said tags, the retainer having a slot in one face and an inspection opening in another face, screws for securing the retainer to a support, said screws being concealed after inserting the first identification tag within the receptacle, locking means in the retainer cooperable with said apertures in the identification tags, said means and said apertures cooperating to permanently lock each tag within the retainer.

3. A plurality of identification tags, a retainer for said tags having an aperture in one face thereof for revealing characters on one of the tags, mounting screws accessible through said aperture, said identification tags serving to close said aperture and conceal said mounting screws, and cooperating locking means on the tags and in the retainer to permanently lock the tags within the retainer.

4. A motor vehicle identification means comprising a plurality of identification tags, each having an aperture therein, a receptacle permanently secured to the vehicle for holding said tags, said receptacle having a slot for permitting the insertion of one tag at a time and an aperture for revealing the last inserted tag, locking means carried by and entirely within the receptacle and cooperable with said apertures in said tags for permanently securing the said tags together and to the said receptacle, means affording movement of the said tags within the receptacle in a path normal to and away from the aperture in the receptacle consequent upon introduction of succeeding tags through the slot, and said succeeding tag being permanently secured in said receptacle by said securing means for rendering the preceding tag inaccessible.

5. A plurality of identification plates, a device for permanently locking and inclosing said identification plates, said device comprising a receptacle capable of being non-removably mounted on a vehicle and having a slot in one face for permitting the insertion of one plate at a time, and an aperture for revealing the numerals on the last inserted plate; a plurality of resilient members mounted within the receptacle, formations on each of said plates adapted to register with and be permanently locked by said resilient members within said receptacle and spring means for holding the said last inserted tag in close proximity to the aperture.

6. A plurality of identification tags, each having a plurality of threaded apertures, a retainer for inclosing said tags, the retainer having a slot in one face and an inspection opening in another face, screws for securing the retainer to a support, said screws being concealed after inserting the first identification tag within the receptacle, rotatable threaded members extending through said support and adapted to engage said threaded apertures, means permitting said threaded members to rotate in but one direction whereby said identification tags may not be removed without destruction thereof.

7. A motor vehicle identification means comprising a plurality of identification tags, each having a threaded aperture therein, a receptacle permanently secured to the vehicle for permanently enclosing said tags, said receptacle having a slot in one face and an inspection opening in another face, a threaded locking screw carried by and entirely within the receptacle and engageable with the threaded apertures of the tags for permanently securing the said tags together and to the said receptacle, said means comprising a ratchet and pawl mechanism operable by movement of said locking screw and constraining the locking screw to rotation in the tag engaging direction only, whereby said identification means may not be removed without noticeable destruction thereof.

CLYDE O. ROOSE.