PCT WORLD INTELLECTUAL PROPERTY ORGANIZATION
International Bureau

INTERNATIONAL APPLICATION PUBLISHED UNDER THE PATENT COOPERATION TREATY (PCT)

(51) International Patent Classification 5 : A61N 1/30	A1	(11) International Publication Number: WO 92/18197
		(43) International Publication Date: 29 October 1992 (29.10.92)

(21) International Application Number: PCT/NL92/00077

(22) International Filing Date: 15 April 1992 (15.04.92)

(30) Priority data:
9100662 17 April 1991 (17.04.91) NL

(71) Applicant *(for all designated States except US)*: B.V. OPTISCHE INDUSTRIE 'DE OUDE DELFT' [NL/NL]; Van Miereveltlaan 9, NL-2612 XE Delft (NL).

(72) Inventor; and
(75) Inventor/Applicant *(for US only)* : VAN GRONINGEN, John [NL/NL]; Tramdijk 7, NL-3256 LK Achthuizen (NL).

(74) Agent: VAN DER BURG, Louis; B.V. Optische Industrie 'De Oude Delft', Van Miereveltlaan 9, NL-2612 XE Delft (NL).

(81) Designated States: AT (European patent), BE (European patent), CA, CH (European patent), DE (European patent), DK (European patent), ES (European patent), FR (European patent), GB (European patent), GR (European patent), IT (European patent), JP, LU (European patent), MC (European patent), NL (European patent), SE (European patent), US.

Published
With international search report.
In English translation (filed in Dutch).

(54) Title: DEVICE FOR CARRYING OUT AN IONTOPHORESIS TREATMENT ON A PATIENT

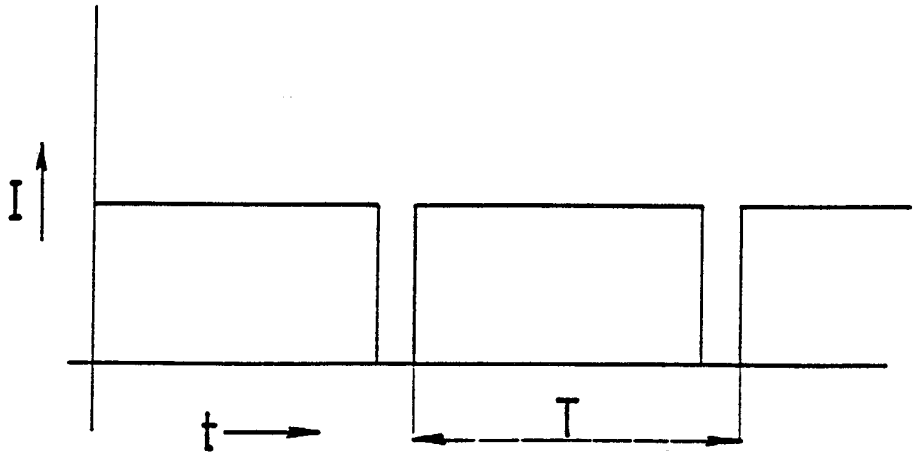

(57) Abstract

A device for carrying out an iontophoresis treatment on a patient is provided with a signal generator for generating a treatment signal and an output stage which can be connected to the patient by means of two electrodes. The signal generator generates as treatment signal a pulsed direct current with a duty cycle of at least 80 %.

FOR THE PURPOSES OF INFORMATION ONLY

Codes used to identify States party to the PCT on the front pages of pamphlets publishing international applications under the PCT.

AT	Austria
AU	Australia
BB	Barbados
BE	Belgium
BF	Burkina Faso
BG	Bulgaria
BJ	Benin
BR	Brazil
CA	Canada
CF	Central African Republic
CG	Congo
CH	Switzerland
CI	Côte d'Ivoire
CM	Cameroon
CS	Czechoslovakia
DE	Germany
DK	Denmark
ES	Spain
FI	Finland
FR	France
GA	Gabon
GB	United Kingdom
GN	Guinea
GR	Greece
HU	Hungary
IT	Italy
JP	Japan
KP	Democratic People's Republic of Korea
KR	Republic of Korea
LI	Liechtenstein
LK	Sri Lanka
LU	Luxembourg
MC	Monaco
MG	Madagascar
ML	Mali
MN	Mongolia
MR	Mauritania
MW	Malawi
NL	Netherlands
NO	Norway
PL	Poland
RO	Romania
RU	Russian Federation
SD	Sudan
SE	Sweden
SN	Senegal
SU	Soviet Union
TD	Chad
TG	Togo
US	United States of America

Title: Device for carrying out an iontophoresis treatment on a patient

The invention relates to a device for carrying out an iontophoresis treatment on a patient, provided with a signal generator for generating a treatment signal and an output stage which can be connected to the patient by means of two electrodes.

Such devices are known in various embodiments. With the aid of an iontophoresis treatment, it is possible to introduce electrically charged particles into a patient's body by means of the treatment signal. In this way it is possible to introduce a drug locally into the body. Under these circumstances, the quantity of substance introduced into the body is essentially proportional to the product of the treatment current and the time. In the standard devices of this type, various kinds of treatment signals are used but they all have disadvantages.

A known treatment signal is formed by an uninterrupted direct current, which has the drawback that a severe burning sensation is induced in the patient by this current form, which can very rapidly result in cauterisation of the patient's skin, either over a large area under the entire electrode or as a local so-called point cauterisation. As a result, the maximum permissible current density of the treatment signal is very low and in practice it is assumed that a maximum value of 0.2 mA/cm^2 is still safe. As a result, only a small amount of substance can be introduced into the patient's body per unit time and the treatment takes a relatively long time. In addition, the treatment signal in this form causes such a high skin stress that a daily repetition of the treatment is virtually ruled out.

Another known treatment signal is formed by a pulse current in the form of a half-wave or full-wave rectified sinusoidal signal, which also has the drawback that a burning sensation can be induced in the patient

and cauterisation of the skin also occurs.

Moreover, the duty cycle of said signal is appreciably less than 100%, as a result of which a relatively small quantity of substance can be introduced into the body per unit time, with the result that a longer treatment time is necessary and, consequently, a high skin stress occurs again. In addition, the treatment signal in this form has the drawback that such current forms are usually also used for other therapies, with the result that a combination effect occurs, the consequences of which are incalculable.

Finally, a device is also known in which a treatment signal is generated which comprises a depolarising alternating current which is made up of a positive pulse and a smaller negative pulse or vice versa. The duty cycle of this treatment signal is appreciably less than 100%, as a result of which long treatment times and high current densities are necessary. In addition, the negative pulse would result in an inverse effect to the positive pulse, thereby reducing the efficiency of the treatment further.

The object of the invention is to provide a device of the type mentioned in the introduction, in which the disadvantages mentioned are eliminated in a simple and expedient manner.

For this purpose, the device according to the invention has the characteristic that the signal generator generates as treatment signal a pulsed direct current with a duty cycle of at least 80%.

In this manner, a device is obtained which makes possible a particularly expedient iontophoresis treatment of the patient, with a high efficiency for the introduction of the substance being achieved by the relatively high duty cycle. Surprisingly, it has been found that the treatment signal generated by the device according to the invention does not induce any burning sensation in the

patient, with the result that a relatively high current density can be used and, consequently, more substance can be introduced in the same treatment time. In practical tests it has been found that no cauterisation of the skin occurs. As a result of the low skin stress, the patient can be treated regularly, if necessary daily.

The invention is explained in greater detail below with reference to the drawing, which shows an exemplary embodiment.

Figure 1 is a highly simplified block diagram of an embodiment of the device according to the invention.

Figure 2 shows the current form of the treatment signal of the device according to Figure 1.

Figure 1 shows a highly simplified block diagram of a device for carrying out an iontophoresis treatment on a patient, which device is provided with a signal generator 1 for generating a treatment signal and an output stage 2 which can be connected to the patient by means of two diagrammatically indicated electrodes 3. As is indicated in Figure 1, the output of the output stage 2 is designed as a current source. The treatment signal generated by the signal generator 1 is a pulsed direct current or rectangular pulse train, the on/off ratio or duty cycle of the signal per cycle being very high, that is to say at least 80%.

The current density, the frequency and the duty cycle of the treatment signal can be set by means of a suitable setting device 4, 5 or 6, respectively. In this connection, the duty cycle can preferably be set between 90 and 98%. Satisfactory treatment results can already be achieved with a duty cycle of at least 80%.

The frequency of the treatment signal can be set by means of the setting device 5 to a value upwards of at least 1 kHz and is preferably set in the region of 4-8 kHz.

Tests have shown that the current density of the

treatment signal can, without difficulty, be set a factor of 5 or more higher than in the known device, that is to say to a value of 1 mA/cm^2 or higher.

An example of the current form of the treatment signal of the device described is shown very diagrammatically in Figure 2, the cycle of the signal being indicated by T. It is pointed out that the current form will in practice differ more or less from the ideal square shape shown.

The treatment signal in this form has important advantages. The duty cycle can be very high, in the region of 90-98%, as a result of which a high efficiency is achieved in the introduction of substances into the body by means of the treatment. No burning sensation occurs in the patient, with the result that high current densities can be used, as a result of which more drug can be introduced into the patient in a certain treatment period than is possible in the case of the known device. Tests have shown that no cauterisation of the skin occurs. As a result, the treatment can be carried out much more frequently, if necessary even daily.

The invention is not restricted to the embodiment described above, which may be varied in various ways within the scope of the invention.

Claims

1. Device for carrying out an iontophoresis treatment on a patient, provided with a signal generator for generating a treatment signal and an output stage which can be connected to the patient by means of two electrodes, characterised in that the signal generator generates as treatment signal a pulsed direct current with a duty cycle of at least 80%.

2. Device according to Claim 1, characterised in that the duty cycle of the treatment signal is 90-98%.

3. Device according to Claim 1 or 2, characterised in that the frequency of the treatment signal is at least 1 kHz.

4. Device according to Claim 2, characterised in that the frequency of the treatment signal is in the region of 4-8 kHz.

5. Device according to one of the preceding claims, characterised in that the output stage has an output which acts as current source.

6. Device according to one of the preceding claims, characterised in that the current density and, preferably, the frequency and the duty cycle of the treatment signal can be set.

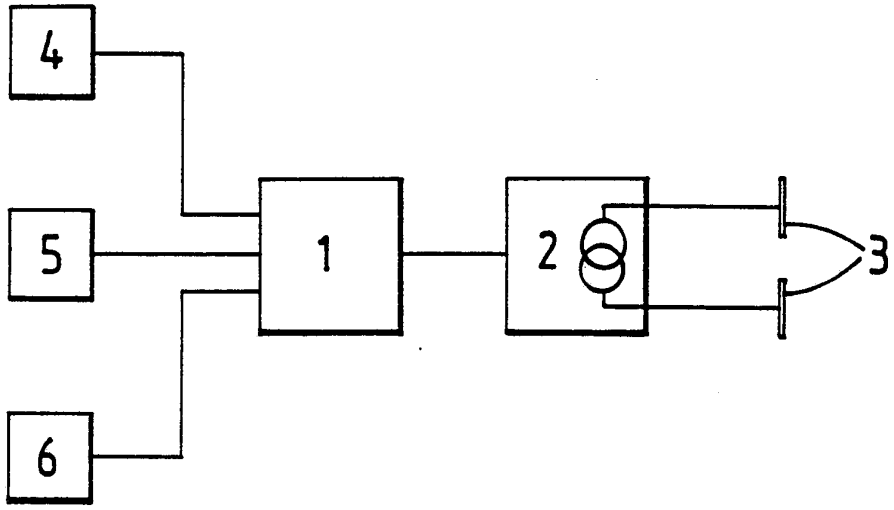

fig.1

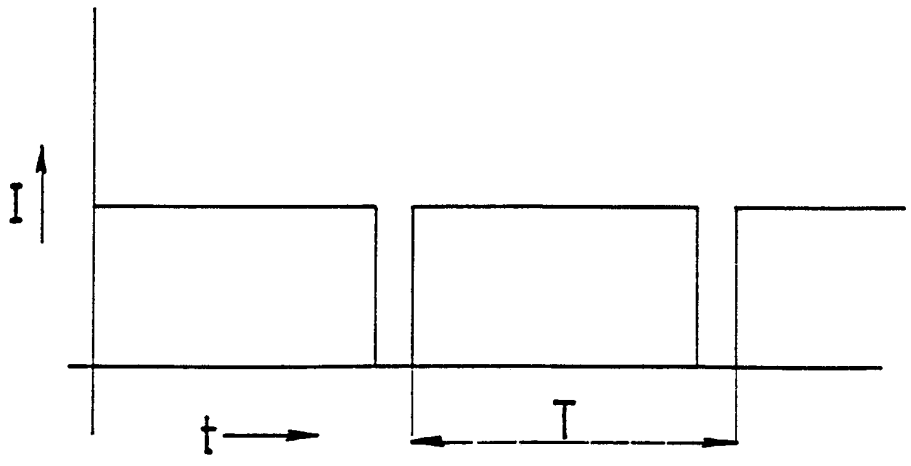

fig.2

INTERNATIONAL SEARCH REPORT

International Application No PCT/NL 92/00077

I. CLASSIFICATION OF SUBJECT MATTER (if several classification symbols apply, indicate all)[6]

According to International Patent Classification (IPC) or to both National Classification and IPC

Int.Cl. 5 A61N1/30

II. FIELDS SEARCHED

Minimum Documentation Searched[7]

Classification System	Classification Symbols
Int.Cl. 5	A61N

Documentation Searched other than Minimum Documentation to the Extent that such Documents are Included in the Fields Searched[8]

III. DOCUMENTS CONSIDERED TO BE RELEVANT[9]

Category °	Citation of Document,[11] with indication, where appropriate, of the relevant passages[12]	Relevant to Claim No.[13]
Y	US,A,4 116 238 (D. PETTIJOHN). 26 September 1978 see the whole document	1,3,5
Y	US,A,4 167 190 (P D SORENSON ET AL.) 11 September 1979 see the whole document	1,3,5
A		6
A	US,A,4 340 047 (R. TAPPER ET AL.) 20 July 1982 see the whole document	1
A	EP,A,0 308 572 (KABUSHIKI KAISYA ADVANCE) 29 March 1989 see page 4, line 11 - line 37; figures	1-6

° Special categories of cited documents :[10]

"A" document defining the general state of the art which is not considered to be of particular relevance

"E" earlier document but published on or after the international filing date

"L" document which may throw doubts on priority claim(s) or which is cited to establish the publication date of another citation or other special reason (as specified)

"O" document referring to an oral disclosure, use, exhibition or other means

"P" document published prior to the international filing date but later than the priority date claimed

"T" later document published after the international filing date or priority date and not in conflict with the application but cited to understand the principle or theory underlying the invention

"X" document of particular relevance; the claimed invention cannot be considered novel or cannot be considered to involve an inventive step

"Y" document of particular relevance; the claimed invention cannot be considered to involve an inventive step when the document is combined with one or more other such documents, such combination being obvious to a person skilled in the art.

"&" document member of the same patent family

IV. CERTIFICATION

Date of the Actual Completion of the International Search	Date of Mailing of this International Search Report
23 JULY 1992	07. 08. 92
International Searching Authority	**Signature of Authorized Officer**
EUROPEAN PATENT OFFICE	FERRIGNO A.

Form PCT/ISA/210 (second sheet) (January 1985)

ANNEX TO THE INTERNATIONAL SEARCH REPORT ON INTERNATIONAL PATENT APPLICATION NO. NL 9200077 SA 59253

This annex lists the patent family members relating to the patent documents cited in the above-mentioned international search report. The members are as contained in the European Patent Office EDP file on 23/07/92
The European Patent Office is in no way liable for these particulars which are merely given for the purpose of information.

Patent document cited in search report	Publication date	Patent family member(s)	Publication date
US-A-4116238	26-09-78	JP-A- 53024550	07-03-78
US-A-4167190	11-09-79	None	
US-A-4340047	20-07-82	US-A- 4301794	24-11-81
		AT-B- 364722	10-11-81
		AU-B- 528476	28-04-83
		AU-A- 4323179	24-04-80
		CA-A- 1161119	24-01-84
		CA-A- 1157528	22-11-83
		CH-A- 638992	31-10-83
		CH-A- 645273	28-09-84
		DE-A- 2900642	08-05-80
		DE-A- 2954506	27-03-86
		FR-A,B 2439024	16-05-80
		FR-A,B 2506165	26-11-82
		GB-A,B 2041752	17-09-80
		GB-A,B 2113097	03-08-83
		JP-C- 1305193	28-02-86
		JP-A- 55054961	22-04-80
		JP-B- 60034396	08-08-85
		JP-C- 1416593	22-12-87
		JP-A- 58112552	05-07-83
		JP-B- 62026789	10-06-87
		NL-A- 7900116	22-04-80
		SE-B- 440315	29-07-85
		SE-A- 7900072	19-04-80
		SE-A- 8404243	27-08-84
EP-A-0308572	29-03-89	JP-A- 60188176	25-09-85
		JP-B- 4001634	13-01-92
		JP-A- 61031169	13-02-86
		JP-C- 1620191	30-09-91
		JP-B- 2045461	09-10-90
		JP-A- 60156475	16-08-85
		AU-B- 599493	19-07-90
		AU-A- 1850688	22-09-88
		AU-B- 575068	21-07-88
		AU-A- 3249284	07-03-85
		CA-A- 1262564	31-10-89

ANNEX TO THE INTERNATIONAL SEARCH REPORT ON INTERNATIONAL PATENT APPLICATION NO. NL 9200077 SA 59253

This annex lists the patent family members relating to the patent documents cited in the above-mentioned international search report. The members are as contained in the European Patent Office EDP file on
The European Patent Office is in no way liable for these particulars which are merely given for the purpose of information. 23/07/92

Patent document cited in search report	Publication date	Patent family member(s)	Publication date
EP-A-0308572		EP-A,B 0138347	24-04-85
		US-A- 4764164	16-08-88