Aug. 9, 1949. L. A. SCARPELLINO 2,478,597

BODY MEMBER REST FOR X-RAYS

Filed June 19, 1944

Fig. 1

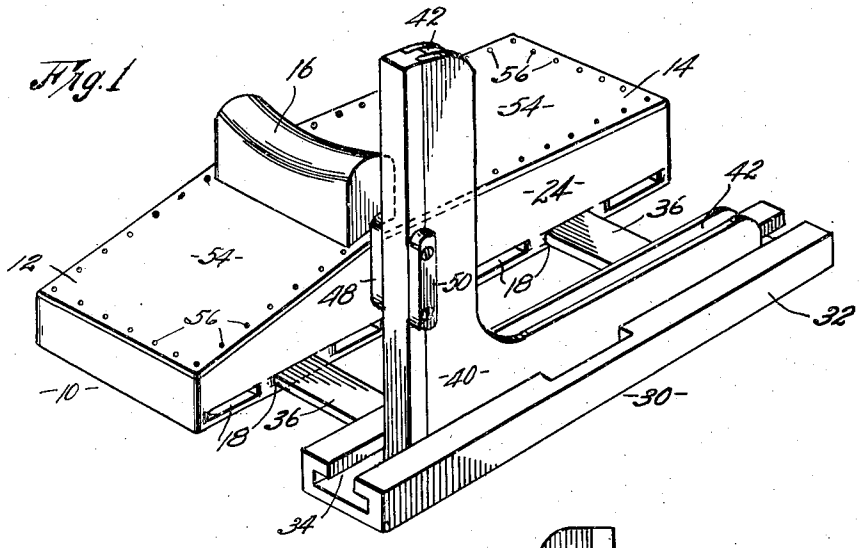

Fig. 2

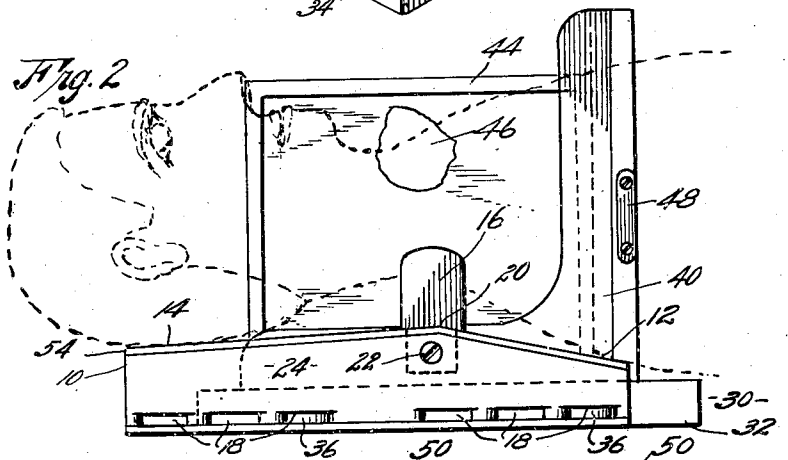

Fig. 3

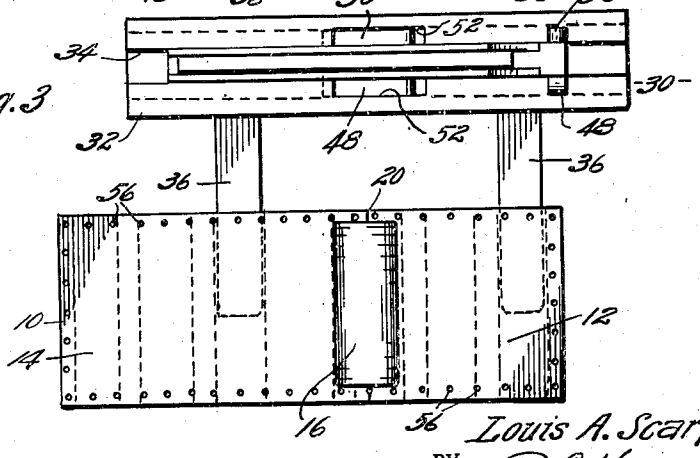

INVENTOR,
Louis A. Scarpellino.
BY
Roy E. Hamilton,
Attorney.

Patented Aug. 9, 1949 2,478,597

UNITED STATES PATENT OFFICE

2,478,597

BODY MEMBER REST FOR X-RAYS

Louis A. Scarpellino, Kansas City, Mo.

Application June 19, 1944, Serial No. 540,956

2 Claims. (Cl. 250—58)

1

This invention relates to improvements in body member rest for roentgenography or X-ray and has particular reference to a head and shoulder rest for patients while making X-ray exposures.

The principal object of the present invention is the provision of a head and shoulder rest having cassette holder transversely and longitudinally adjustable relative thereto.

Another object is the provision of a head and shoulder rest assembly having an intermediate neck rest.

Other objects are efficiency of operation, ease and economy of construction and adaptability for use in supporting the various members of the body while taking roentgenograph or X-ray pictures thereof.

With these objects in view as well as other objects which will appear during the course of the specification, reference will now be had to the drawings wherein

Figure 1 is a perspective view of the body member rest for X-ray work embodying this invention.

Fig. 2 is a side elevation of the body member rest device showing a head and shoulder (in dotted lines) resting thereon and with a cassette operatively positioned therein.

Fig. 3 is a plan view of the body member rest.

Throughout the various views like reference characters refer to similar parts and the numeral 10 designates a table member adapted to serve as a rest for the head and shoulder of a patient for the purpose of steadying them while an X-ray plate or film is being exposed.

In taking an roentgenograph or X-ray picture it is necessary that the body member being taken be maintained in fixed position relative to the X-ray tube and the plate during the period of exposure. Furthermore, it is desirable to support those portions of the body member adjacent the parts being X-rayed.

While the structure shown may be used for steadying the various parts of the body, yet it is specifically designed to support the head and shoulders for the purpose of taking pictures of the cervical vertebrae. For example the table 10 is so constructed that the shoulders of the patient will rest on the forwardly inclined end 12 of the table while the head of the patient rests on the rear inclined portion 14 with a neck rest member 16 disposed therebetween to support the patient's neck so that his head and shoulders are in the normal relative position. This table 10 is relatively low in height and is provided adjacent its lower portion with two series of equally

2

spaced apart transverse slots 18. The meeting of the shoulder section 12 and the head section 14 at 20 is normally at a high point of the table and the shoulder portion and the head portion are inclined in opposite directions outwardly and downwardly therefrom. The neck rest 16 is secured by screws 22 to the side rails 24 of the table, thus making it removable so that should it be found more convenient for supporting certain portions of the body directly on the table top this rest could be quickly and easily removed.

The cassette holder 30 comprises a base member 32 having a longitudinally disposed T-groove 34 and transversely disposed tongues 36 which are adapted to be positioned respectively in corresponding slots 18 of the two series thus making it possible to adjust said base member transversely toward and from said table to accommodate patients of different width of shoulders. By placing the tongues 36 in different sets of slots the base member 32 may be adjusted longitudinally of said table. It will be noted that the bottoms of the table 10 and base 30 are in a common plane thus insuring the proper positioning of the device on any planar surface.

An angled frame 40 slidably mounted in the T-groove 34 of the base 32 is grooved at 42 to receive the cassette 44 carrying the X-ray plate 46. Frame 40 is provided intermediate the extremities of each of its arms with a pair of elongated blocks 48 and 50 respectively which serve to engage the T-groove 34 when the holder is in use. Notches 52 formed in base 32 are slightly longer than blocks 48 so that the frame 40 may be positioned in the base by inserting the blocks through said notches then moving it longitudinally therein to the desired position. Frame 40 also can be inserted in the base member 32 from either end thereof, and furthermore either arm of the frame may be inserted in said groove.

The materials from which the parts of this device are made are those such as wood, aluminum, rubber, etc., which are substantially transparent to X-rays. The cassette or plate holder 46 is usually made of aluminum or hard rubber which are opaque to ordinary light but are transparent to the X-ray.

The top sheet 54 of table 10 is made of a relatively thick material secured at its marginal edges by tacks 56 to the body of the table.

When the X-ray picture is to be taken, for example, of the vertebrae of the neck, the patient is positioned in a reclining position with his shoulders on table top 12 and with his head resting on the portion of the table designated as 14.

The neck rest is now in position to engage and retain the neck in the raised position as indicated in Fig. 2.

The cassette holder is now moved as closely to the parts being pictured as the shoulders will permit and the plate is then adjusted longitudinally in base 30 to properly locate the vertebrae to be pictured relative to the plate. The body parts are now subjected to the X-rays in the usual manner and the resultant shadows are recorded on the plate 46.

This same device may be used to steady other parts of the body such as the knee, arm, etc., during the time of exposure to the X-ray. The plate may also be adjusted relative the body member to be X-rayed, both transversely and longitudinally of the supporting table, to best show the particular parts to be examined.

The term "plate" as used in the specification and claims is understood to include the glass plate, film, or any other sensitized sheet suitable for receiving the projected shadows produced by the X-rays which may be developed to produce a picture of said shadow.

What is claimed as new and desired to be covered by Letters Patent is:

1. A device of the character described comprising a table for supporting body members to be X-rayed, having two like series of horizontally disposed slots formed therethrough, an X-ray plate holder including a longitudinally grooved base member having a pair of transversely disposed tongues adapted for adjustment in corresponding slots of the two series of slots formed in said table whereby said base member is transversely adjustable relative to said table, and including an angled frame having two legs of different lengths, each of which are adapted for slidable adjustment in the groove of said base member and to support an X-ray plate.

2. A device of the character described comprising an elongated table for supporting body members to be X-rayed, having two like series of horizontally disposed slots formed therethrough, a transversely disposed neck rest member carried on top of said table intermediate its ends, an X-ray plate holder including a longitudinally grooved base member having a pair of transversely disposed tongues adapted for adjustment in corresponding slots of the two series of slots formed in said table whereby said base member is transversely adjustable relative to said table, and including an angled plate supporting frame having two legs of different lengths, each of which are slidably adjustable in the groove of said base member.

LOUIS A. SCARPELLINO.

The following references are of record in the file of this patent:

REFERENCES CITED

UNITED STATES PATENTS

Number	Name	Date
1,241,136	Meyer	Sept. 25, 1917
1,576,781	Philips	Mar. 16, 1926
1,907,054	Forst	May 2, 1933
2,115,096	Cleary	Apr. 26, 1938
2,141,857	Gamble	Dec. 27, 1938
2,453,863	Salisbury	Nov. 16, 1948