Aug. 7, 1923. 1,464,359

W. W. HESSON

TOBACCO PIPE

Filed Sept. 14, 1920

Fig. 1.

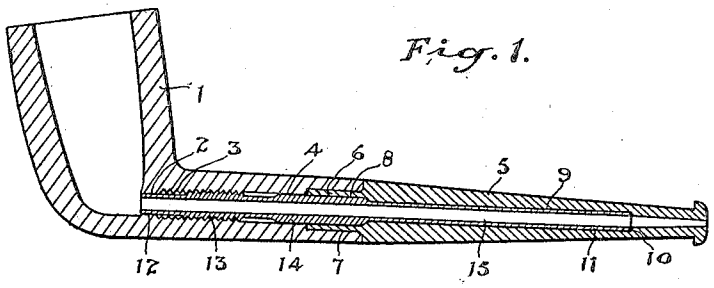

Fig. 2.

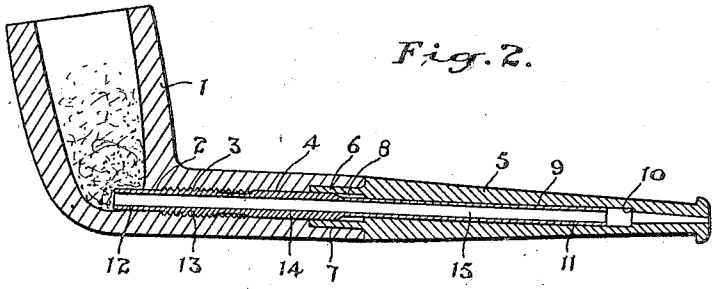

Fig. 5.

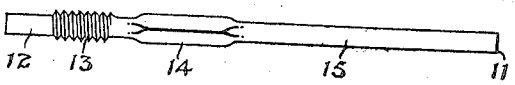

Fig. 3.

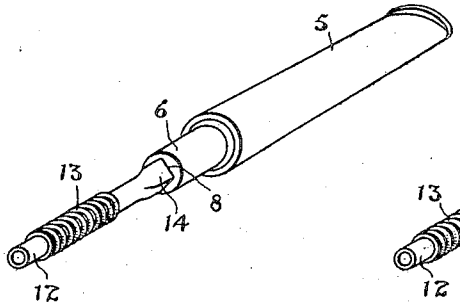

Fig. 4.

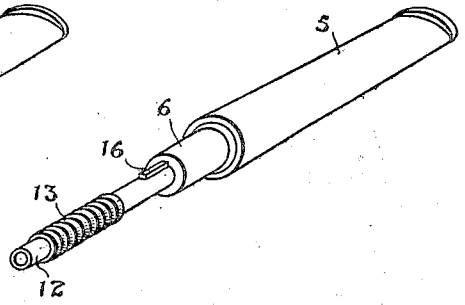

Inventor.

William Wallace Hesson

by H. J. S. Dennison Atty.

Patented Aug. 7, 1923. 1,464,359

UNITED STATES PATENT OFFICE.

WILLIAM WALLACE HESSON, OF TORONTO, ONTARIO, CANADA.

TOBACCO PIPE.

Application filed September 14, 1920. Serial No. 410,302.

To all whom it may concern:

Be it known that I, WILLIAM WALLACE HESSON, a subject of the King of Great Britain, and resident of the city of Toronto, county of York, Province of Ontario, in the Dominion of Canada, have invented certain new and useful Improvements in Tobacco Pipes, described in the following specification and illustrated in the accompanying drawings, that form part of the same.

The principal objects of the present invention are to enhance the pleasures of pipe smoking by eliminating many of the disagreeable features incident thereto and to provide a pipe which may be retained in a clean condition and in which proper draft conditions may be always maintained.

The principal feature of the invention consists in the novel construction of the bowl and mouthpiece whereby an inner tubular stem is threaded in the bowl and is adapted to be projected into the bowl and withdrawn to free the draft opening, the inner stem being longitudinally slidable in the mouthpiece and adapted to rotate therewith and whereby a continuous passage free from moisture pockets is provided from bowl to mouthpiece.

In the accompanying drawings, Figure 1 is a longitudinal sectional view of a pipe constructed in accordance with this invention and arranged ready for smoking.

Figure 2 is a longitudinal sectional view of a pipe showing the manner of freeing the draft opening by projecting the inner stem into the bowl.

Figure 3 is a perspective view of the mouthpiece showing the inner stem attached thereto and illustrating the non-rotative connection between the two.

Figure 4 is a perspective view similar to Fig. 3 showing a slightly modified construction in the inner stem, and Figure 5 is a plan view of the inner stem.

It is well known to pipe smokers that moisture pockets in the stem of a pipe are very undesirable, as moisture, ashes and tobacco collect therein and create a very undesirable condition.

To obviate this condition, several forms of pipes with inner tubular metal stems have been devised but none of these so far as I am aware have provided such an inner stem as will maintain a continuous passage free from moisture pockets and which will prevent leakage of moisture from the bowl around the stem.

According to the present invention, the stem of the pipe bowl 1 is formed with a cylindrical passage 2 extending into the stem from the bottom end of the bowl. A short distance from the bowl this passage is enlarged and screw threaded with a thread 3 and the passage is further slightly enlarged at 4 beyond the outer end of the threaded portion.

The mouthpiece 5 is provided with a cylindrical extension 6 which fits into a counter sink 7 in the bowl stem and the inner end 8 of the hole through the stem is squared. The remaining portion 9 of the hole through the mouthpiece is cylindrical and close to the outer end is formed with a shoulder 10.

The inner tubular stem 11 is made of aluminium or other suitable material and is formed with a cylindrical end portion 12 adapted to fit snugly into the cylindrical passage 2. An enlarged threaded portion 13 fits the thread 3 in the pipe bowl stem, and beyond the threaded portion the tube is formed with a squared portion 14 which fits with a sliding fit in the squared hole 8 in the inner end of the mouthpiece 5. The remaining portion 15 of the inner stem is cylindrical and fits the hole 9. The length of the inner stem is such that when the inner end thereof is flush with the inner surface of the bowl of the pipe, the outer end abuts the shoulder 10 and by reason of the thread in the pipe bowl stem, this inner stem may be drawn snugly up against the shoulder.

It will be seen that by rotating the mouthpiece 5 by reason of the squared hole 8 and the squared portion 4 of the inner stem, the said inner stem will be rotated therewith and through its engagement with the thread in the pipe bowl stem upon rotation the inner stem will be moved longitudinally.

This feature is very important. It is well known to smokers that by reason of packing the tobacco too tight the draft passage frequently becomes clogged. With this pipe when this occurs it is merely necessary to turn the mouthpiece which causes the inner stem to be projected inwardly into the bowl as shown in Figure 2, which pushes the tobacco away from the bottom of the bowl making an opening and by reversing the turning movement of the mouthpiece, the

inner stem is drawn back to its original position and the pipe will be clear.

It will be understood that the inner stem may be provided with a key 16 as shown in Figure 4 or it may be otherwise constructed to have a sliding and non-rotative contact with the mouthpiece.

It will be understood that the cylindrical end portion 12 fitting snugly in the passage 2 will prevent dirt and ashes getting into the thread portion and the thread will prevent the leakage of moisture back along the outer part of the metal stem.

The contact of the shoulder 10 against the outer end of the inner stem will prevent moisture getting around the outer side of the inner stem. If desired, the inner stem may be carried through to the end of the mouthpiece as it is held from displacement by the threaded portion.

What I claim as my invention is:—

1. A tobacco pipe having a tubular inner stem slidably arranged in the mouthpiece, and means within the pipe stem adapted to effect the longitudinal movement of the inner stem without the removal of the mouth piece.

2. A tobacco pipe having a tubular inner stem slidably and non-rotatively arranged in the mouthpiece and threaded into the pipe stem, and being adapted to project its inner end into the bowl.

3. In a tobacco pipe, a bowl having a cylindrical opening at the bottom leading to the stem, a thread in the stem, a mouthpiece rotatably mounted in the stem, a tube having an end adapted to project into the bowl and an external thread to engage the threaded part of the pipe stem, and means for non-rotatively and slidably connecting said inner stem and mouthpiece.

4. In a tobacco pipe, a bowl having a passage through the stem threaded at the inner end, a tubular metal stem having an external thread engaging said threaded stem, said stem having a longitudinal flattened exterior surface beyond the threaded portion, and a mouthpiece rotatably mounted in the outer end of the pipe stem and having a hole with a flattened inner wall to non-rotatively and slidably engage the flattened surface of the metal stem.

WILLIAM WALLACE HESSON.