United States Patent

Busse

[15] **3,643,641**

[45] **Feb. 22, 1972**

[54] GASKET WITH PASSAGEWAY AND VACUUM BLADE FOR INTRODUCING AIR INTO BARREL OF CARBURETOR

[72] Inventor: **Ewald A. Busse**, 3276 Fair Oaks Avenue, Redwood City, Calif. 94063

[22] Filed: **Apr. 9, 1970**

[21] Appl. No.: **27,005**

[52] **U.S. Cl.**.....**123/119 A**, 123/119 D, 123/124, 123/127

[51] **Int. Cl.**.....**F02m 25/06**, F02m 23/00

[58] **Field of Search**.....123/119 A, 119 D, 119, 127, 123/124

[56] **References Cited**

UNITED STATES PATENTS

1,544,801	7/1925	Brown	123/124
2,207,152	7/1940	Huber	123/119 D
3,186,691	6/1965	Manning, Jr.	123/127 X
3,262,437	7/1966	Bradshaw	123/119 A
3,435,810	4/1969	Busse	123/119 A
3,492,980	2/1970	Beck	123/119 A

FOREIGN PATENTS OR APPLICATIONS

454,001	1/1950	Italy	123/119 D

Primary Examiner—Wendell E. Burns
Attorney—Joseph F. Cole

[57] **ABSTRACT**

A gasket body formed with an opening disposed in registration with the bore of a carburetor barrel so that the fuel mixture will pass therethrough on its way to an intake manifold, the gasket body having an air inlet passageway leading from a source of air to the gasket opening and through which additional air may be conveyed to the carburetor for intermixing with the fuel mixture for leaning down the air-fuel ratio, and a vacuum blade projects into the gasket body opening and arranged to create a vacuum in the air inlet passageway for drawing in the additional air.

4 Claims, 7 Drawing Figures

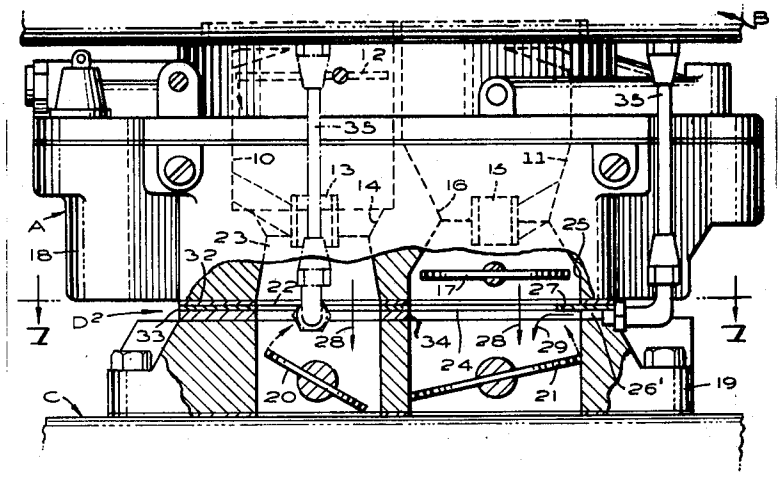

FIG. 1

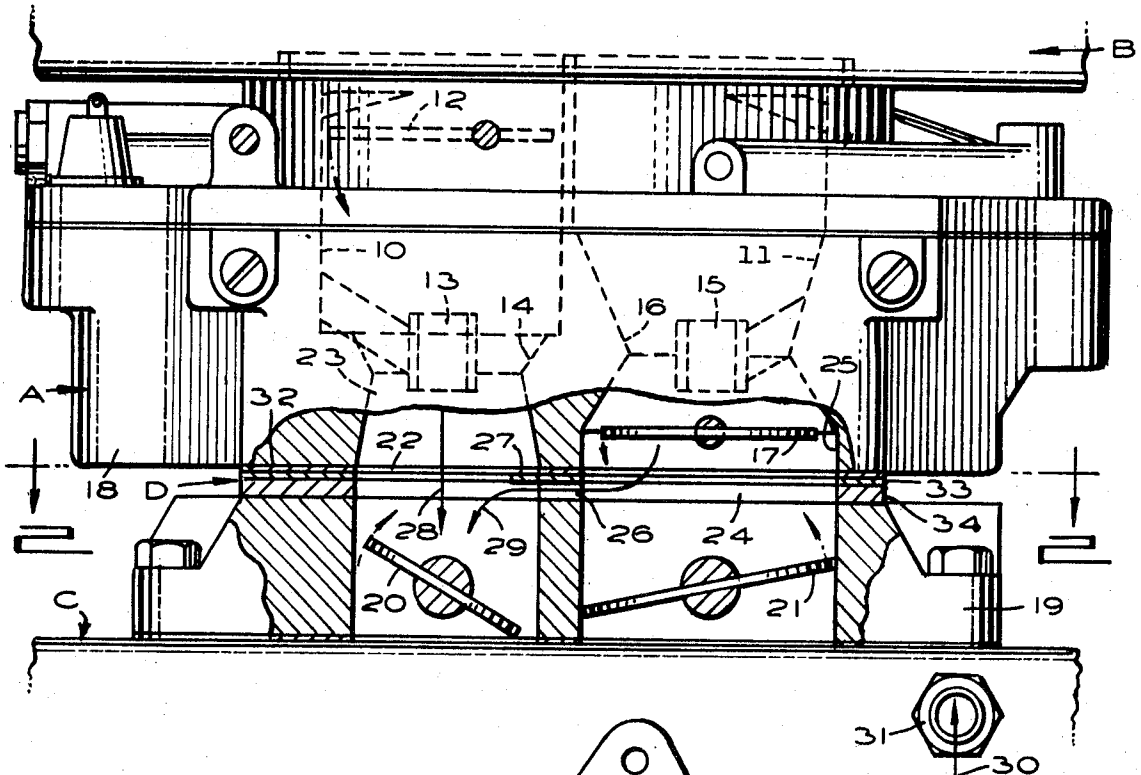

PATENT NO. 3,435,810

FIG. 2

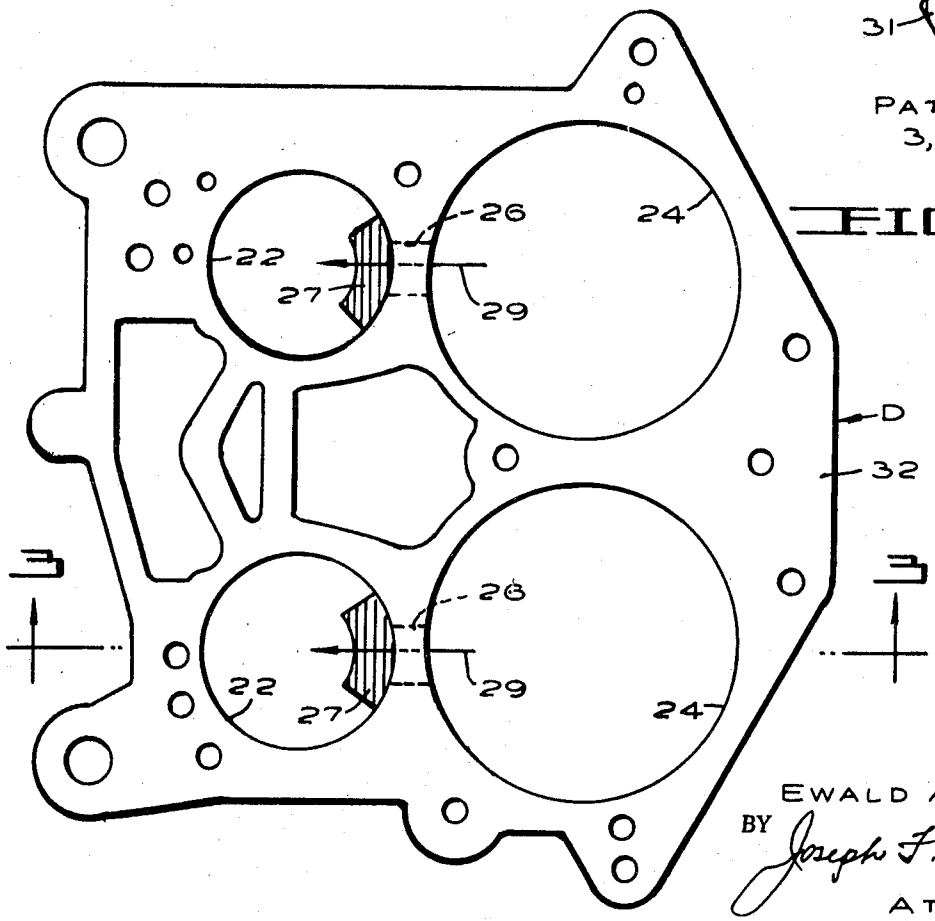

INVENTOR.
EWALD A. BUSSE
BY Joseph F. Cole
ATTORNEY

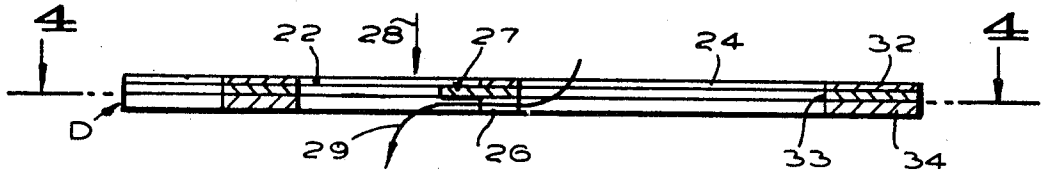

FIG. 3.

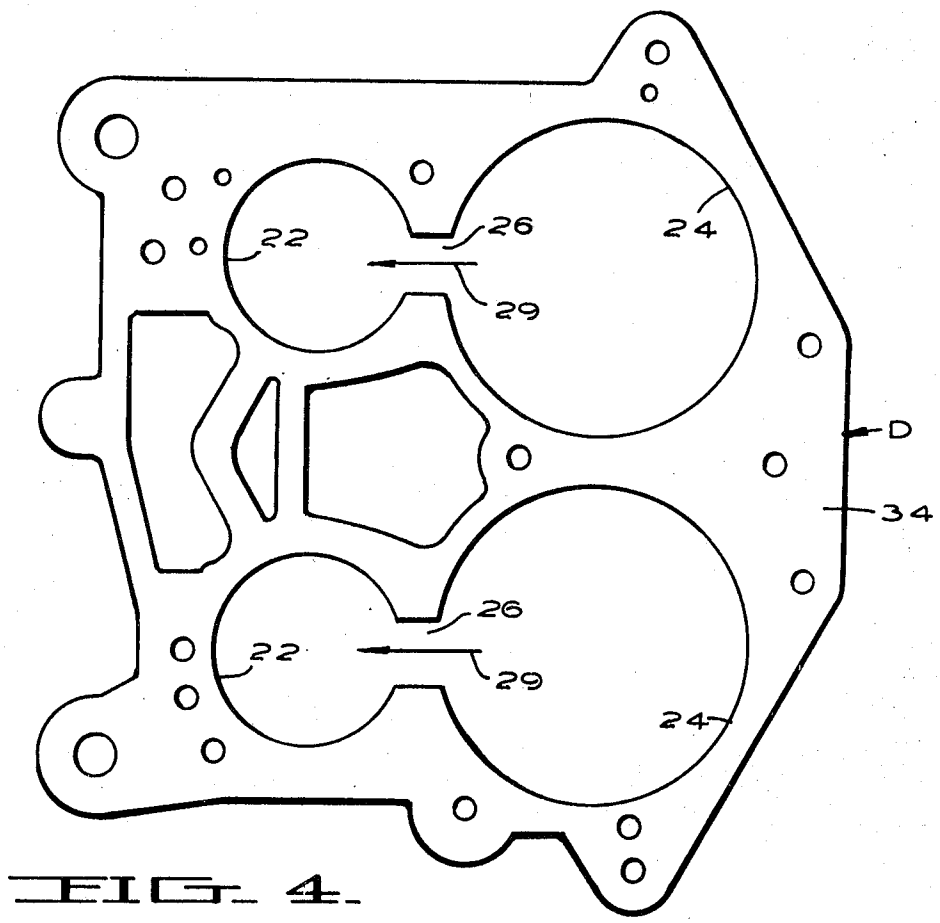

FIG. 4.

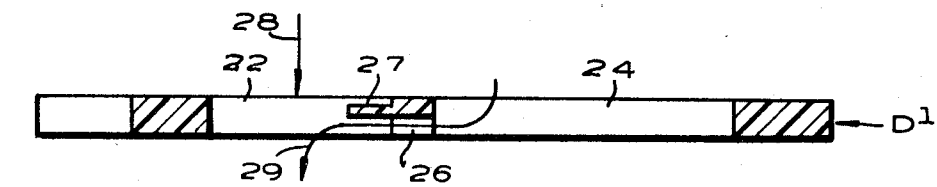

FIG. 5.

INVENTOR.
EWALD A. BUSSE
BY Joseph F. Cole
ATTORNEY

FIG. 6

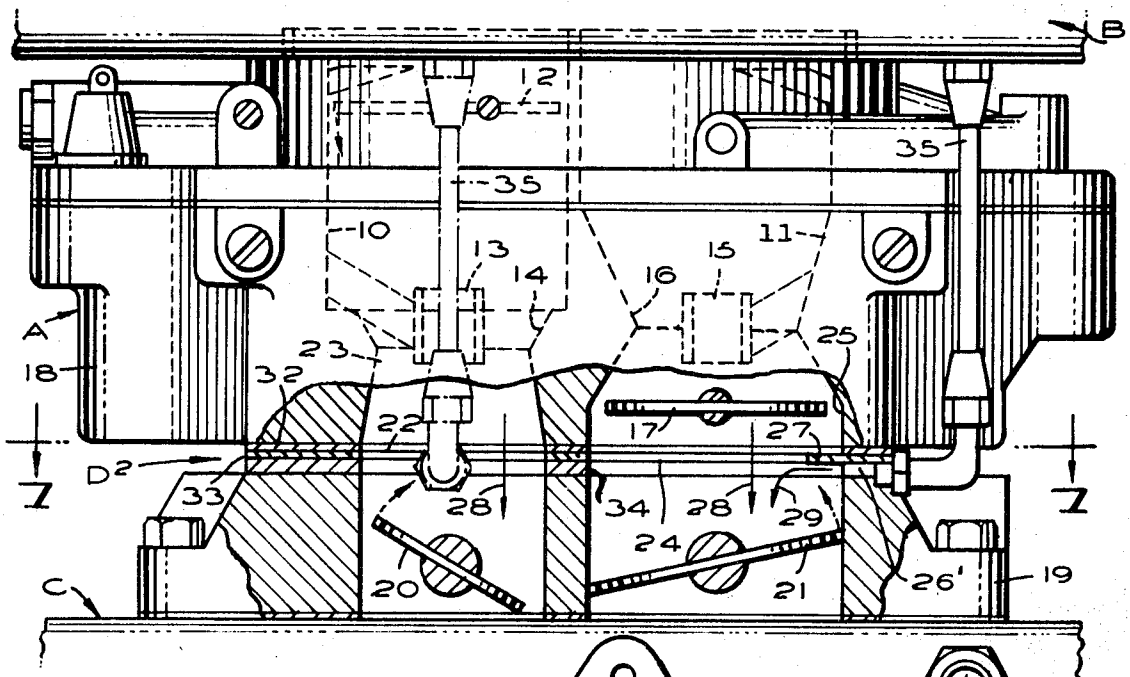

PATENT NO. 3,435,810

FIG. 7

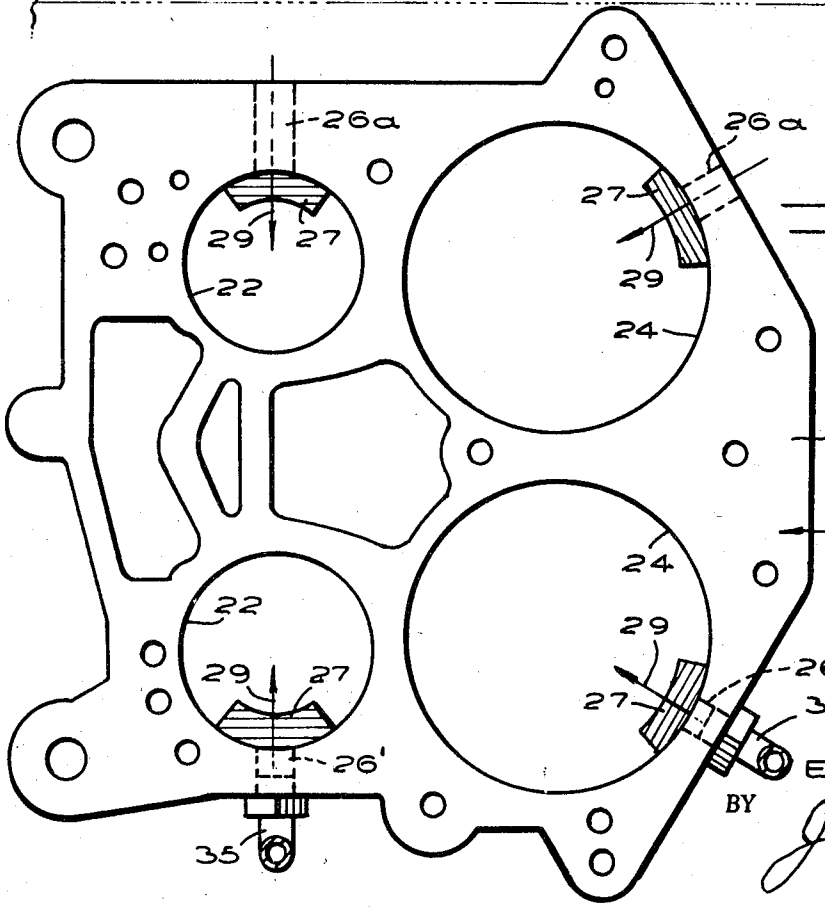

INVENTOR.
EWALD A. BUSSE
BY
Joseph F. Cole
ATTORNEY

GASKET WITH PASSAGEWAY AND VACUUM BLADE FOR INTRODUCING AIR INTO BARREL OF CARBURETOR

In my U.S. Pat. No. 3,435,810 there is disclosed an apparatus for separating the heavier and lighter components of exhaust gases from one another by centrifugal force, and these lighter components are conveyed to the internal combustion to augment the fuel mixture from the carburetor. After the unburned hydrocarbon compounds are returned to the engine, additional air is required to reduce the reading of carbon monoxide to a point where the formation of smog is substantially prevented.

My present invention is designed to perform the duty of leaning down the mixed air-fuel ratio of the carburetor without changing the jet sizes of the carburetor in the primary (low speed) section by providing an air inlet passageway that will supply additional air to the carburetor, and further having a vacuum blade arranged to create a vacuum in this passageway for drawing air from a suitable source into the carburetor, providing the necessary leaning down of the mixed air-fuel ratio. This additional air is required to substantially reduce the carbon monoxide reading at idle speed of the engine, after the unburned hydrocarbon compounds have been returned to the engine and substantially preventing formation of smog.

Other objects and advantages will appear as the specification proceeds, and the novel features of the invention will be set forth in the appended claims.

BRIEF DESCRIPTION OF THE DRAWINGS

For a better understanding of the invention, reference should be made to the accompanying drawings, in which:

FIG. 1 is an elevational view of a carburetor, partly in section, and illustrating my gasket with passageway and vacuum blade for introducing air into the barrel of the carburetor, the additional air being supplied by the high-speed barrel, the operating mechanism for the several valves being omitted;

FIG. 2 is a plan view of the gasket with passageway and vacuum blade for introducing air into the barrel of the carburetor, as seen from the horizontal plane 2—2 in FIG. 1;

FIG. 3 is a sectional view taken along the plane 3—3 of FIG. 2, the gasket being shown as being laminated in three layers;

FIG. 4 is a plan view of the lower layer of the laminated gasket, as seen from the plane 4—4 of FIG. 3;

FIG. 5 is a sectional view similar to FIG. 3, but disclosing the gasket as being formed in a unitary structure;

FIG. 6 is an elevational view, partly in section, and being similar to FIG. 1, but showing the additional air being supplied from an air filter; and

FIG. 7 is a horizontal sectional view taken along the plane 7—7 of FIG. 6.

While I have shown only the preferred embodiments of the invention, it should be understood that various changes, or modifications, may be made within the scope of the appended claims without departing from the spirit thereof.

DETAILED DESCRIPTION OF THE PREFERRED EMBODIMENTS

Referring now to the drawings in detail, it will be noted that FIG. 1 illustrates a carburetor A of the downdraft type having an air filter B mounted on the top thereof, and an intake manifold C arranged under the carburetor. The carburetor A has a pair of low-speed barrels **10** and a pair of high-speed barrels **11**; however, it should be made clear that carburetors of the single barrel or two barrel types may be used as far as this invention is concerned.

As disclosed in FIG. **1**, a choke valve **12** has been shown in the upper portion of the low-speed barrel **10**, and a gas-feed jet **13** is arranged in the venturi throat **14** of this barrel. Likewise, the high-speed barrel **11** has a gas-feed jet **15** disposed in its venturi throat **16**. Moreover, the barrel **11** is provided with a vacuum air valve **17** disposed below the jet **15**, and this valve is opened by a vacuum in the intake manifold C.

The carburetor A defines a main body **18** having a throttle valve assembly body **19** removably secured thereunder, and this body **19** is provided with a low-speed throttle valve **20** and a high-speed throttle valve **21**. It is well known that the throttle valve **20** opens first, and a mixture of gas and air is fed downwardly through the low-speed barrel **10** from idling to about half speed. At this time, the high-speed valve **21** is closed. After the car reaches the higher speeds, the throttle valve **21** opens and additional fuel mixture is drawn into the manifold C. At this time the low-speed throttle valve **20** remains open.

The control mechanisms for opening and closing the valves **12**, **20** and **21** is well known in the art and has been omitted accordingly from the drawings.

In the first embodiment of the invention, as shown in FIGS. **1** to **4**, inclusive, it will be observed that a gasket D is disposed horizontally and interposed between the carburetor body **18** and the throttle valve assembly **19**. This gasket has a gasket body formed with a pair of openings **22** disposed in registration with the bores **23** of the low-speed barrels **10**. Moreover, the gasket body has a pair of larger openings **24** registering with the bores **25** of the high-speed barrels **11**. The fuel mixture will pass through the openings **22** and **25** on its way to the intake manifold C.

The body of the gasket D has a pair of air inlet passageways **26** leading from a source of air to the gasket openings **22** and through which additional air may be conveyed to the carburetor A for intermixing with the fuel mixture for leaning down the mixed air-fuel ratio. Vacuum blades **27** are provided on the gasket body adjacent to and above the air inlet passageways **26**, the blades defining tips projecting into the gasket body openings **22**, as shown in FIGS. **1–3**, the blades being disposed horizontally so that the fuel mixture flowing over the blades as indicated by the arrows **28** will create a vacuum in the air inlet passageways for drawing additional air into the carburetor, as suggested by the arrows **29**. As shown in FIGS. **1** and **2**, the blades **27** are flat and wider than the passageways **26** and the latter are thinner than wide so that the vacuum created will spread the indrawn air across the bore of the carburetor barrel **10**.

It will be apparent from FIG. **1** that this additional air is provided by the high-speed barrels **11**. When the car is operating on the low-speed barrels **10** only, the additional air is drawn into these barrels from the high-speed barrels **11** to further lean down the fuel-air ration of the low-speed barrels **10** to prevent or materially reduce formation of carbon monoxide and excessive hydrocarbons, when the fuel mixture explodes in the cylinders of the engine.

In FIG. **1**, there is shown the legend "Patent No. 3,435,810" **with an arrow 30 leading from the legend to a fitting 31 connected to the manifold C. As shown in detail in this patent as identified above, an apparatus is provided for separating lighter components in exhaust gases from heavier components, and conveying these lighter components back to the engine. It is these returned components that require the additional air to reduce the carbon monoxide readings at idle speed of the engine and prevent the formation of smog.**

As clearly shown in FIG. **3**, the gasket D is laminated in three layers, the upper layer **32** being a sealing gasket, the intermediate layer **33** preferably being made of metal and carrying the vacuum blades **27**, and the lower layer **34** being made of material forming a sealing gasket and being formed with the air inlet passageways **26** therein.

The gasket D^1 illustrated in FIG. **5** is the same as that shown in FIG. **3**, with the exception that it is made in a unitary structure, for instance, made of plastic or relatively soft metal so that it will seal against the carburetor body **18** and the intake manifold C. Like reference numerals have been applied to corresponding parts of FIGS. **3** and **5**.

Turning now to the modification shown in FIGS. **6** and **7**, the carburetor A, air filter B and the intake manifold C are identical with those illustrated in FIG. **1**, and like reference numerals have been used to designate corresponding parts.

However, the gasket D^2 shown in FIGS. 6 and 7 has its air inlet passageways 26' connected by tubes 35 leading to the air filter B, whereby the additional air is supplied by the air filter.

In FIG. 7, only two of the air inlet passageways 26' have tubes 35 connected thereto, while the remaining air inlet passageways 26*a* communicate directly with the atmosphere surrounding the carburetor A. Otherwise, the construction of the gasket D^2 is the same as the gasket D and, of course, may be the same as the gasket D^1.

When a carburetor of the downdraft type is used, as in FIGS. 1 and 6, the air inlet passageways 26, 26', 26*a* in the gasket body are located directly below the vacuum blades 27.

All of the air inlet passageways 26' and 26*a* in FIG. 7 may have tubes 35 connected thereto, or all may open directly to the atmosphere.

What is claimed is:

1. The combination with a carburetor having a barrel defining a bore through which a fuel mixture may be delivered to an intake manifold connected to the carburetor, and means for returning lighter components recovered from exhaust gases to the intake manifold to augment the fuel mixture, of a gasket comprising:

a. a gasket body formed with an opening disposed in registration with the bore of the barrel so that the fuel mixture will pass therethrough on its way to the manifold;

b. the gasket body having an air inlet passageway leading from a source of air to the gasket opening and through which additional air may be conveyed to the carburetor for intermixing with the fuel mixture for leaning down the mixed air-fuel ratio;

c. and a vacuum blade provided on the gasket body adjacent to the air inlet passageway, the blade defining a tip projecting into the gasket body opening, the blade tip being disposed so that the fuel mixture flowing over the blade will create a vacuum in the air inlet passageway for drawing the additional air into the carburetor that is required by the returned components to reduce the carbon monoxide readings at idle speed of an engine and prevent formation of smog.

2. The combination, as set forth in claim 1;

d. and in which the carburetor defines a main body having a throttle valve assembly body disposed therebeneath, both the gasket body and its vacuum blade being arranged horizontally and interposed between the main body of the carburetor and the throttle valve assembly body.

3. In a gasket with passageway and vacuum blade for introducing air into barrel of carburetor;

a. a horizontally disposed gasket body formed with an opening therein made to be disposed in registration with a bore of a downdraft carburetor barrel so that fuel mixture will pass therethrough on its way to an intake manifold;

b. the gasket body having an air inlet passageway formed therein and leading from a source of air to the gasket body opening;

c. a horizontally disposed vacuum blade provided on the gasket body, the blade being disposed adjacent to and above the air inlet passageway and defining a tip projecting into the gasket body opening so that the fuel mixture flowing over the blade will create a vacuum in the air inlet passageway for drawing additional air into the carburetor;

d. and the gasket body being laminated in three layers, the upper and lower layers being made of material forming sealing gaskets, the intermediate layer being made of metal, and the vacuum blade being formed integral with the intermediate layer.

4. The gasket with passageway and vacuum blade for introducing air into barrel of carburetor, as set forth in claim 3;

e. and in which the air inlet passageway is formed in the lower layer of the gasket body.

* * * * *