June 3, 1941. W. F. BROWN 2,243,895

BEVERAGE MACHINE

Filed Sept. 21, 1938 3 Sheets-Sheet 1

Fig. 1

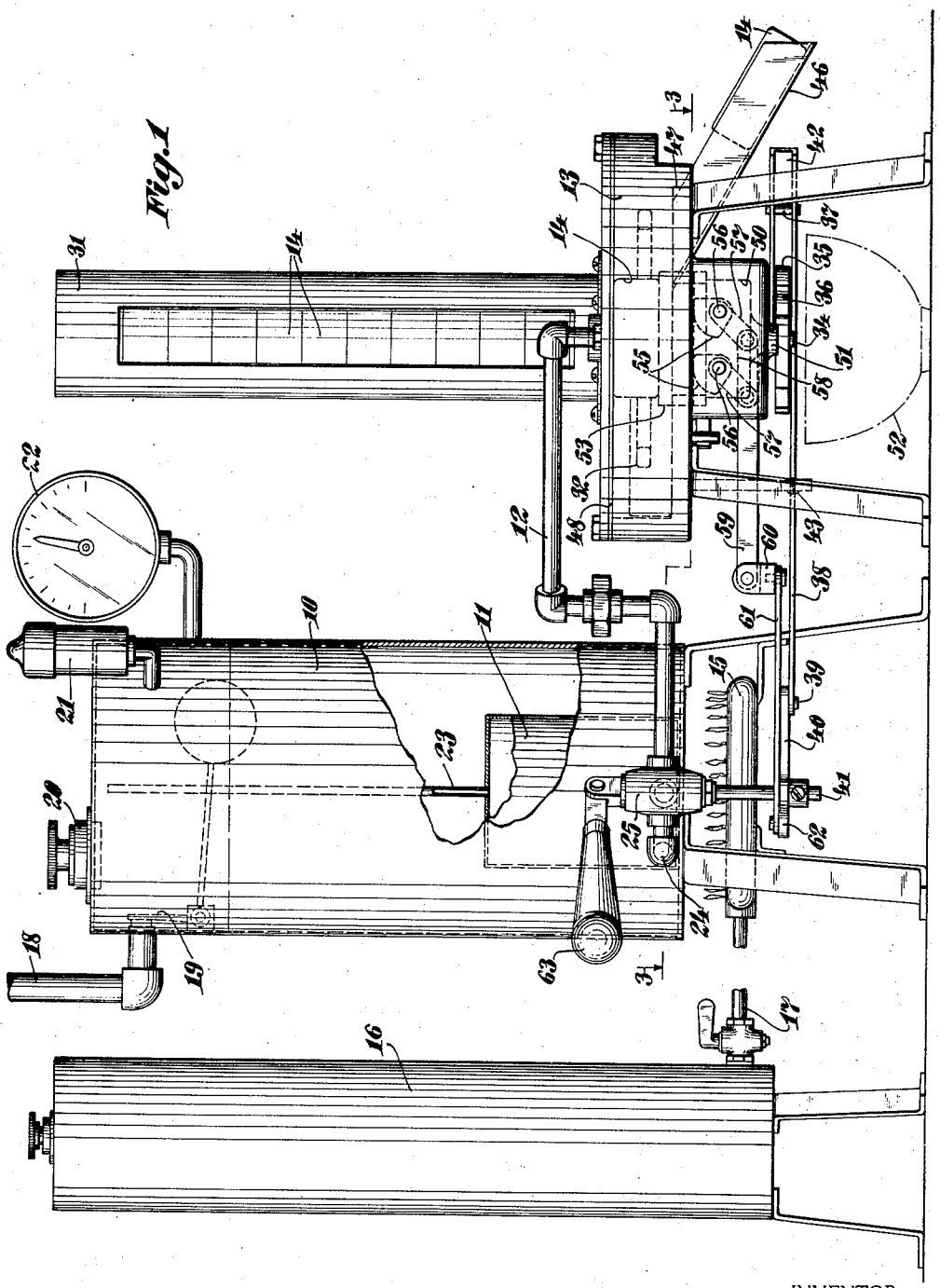

INVENTOR.
William F. Brown,
BY Philip S. Moffett
ATTORNEY.

June 3, 1941. W. F. BROWN 2,243,895

BEVERAGE MACHINE

Filed Sept. 21, 1938 3 Sheets-Sheet 2

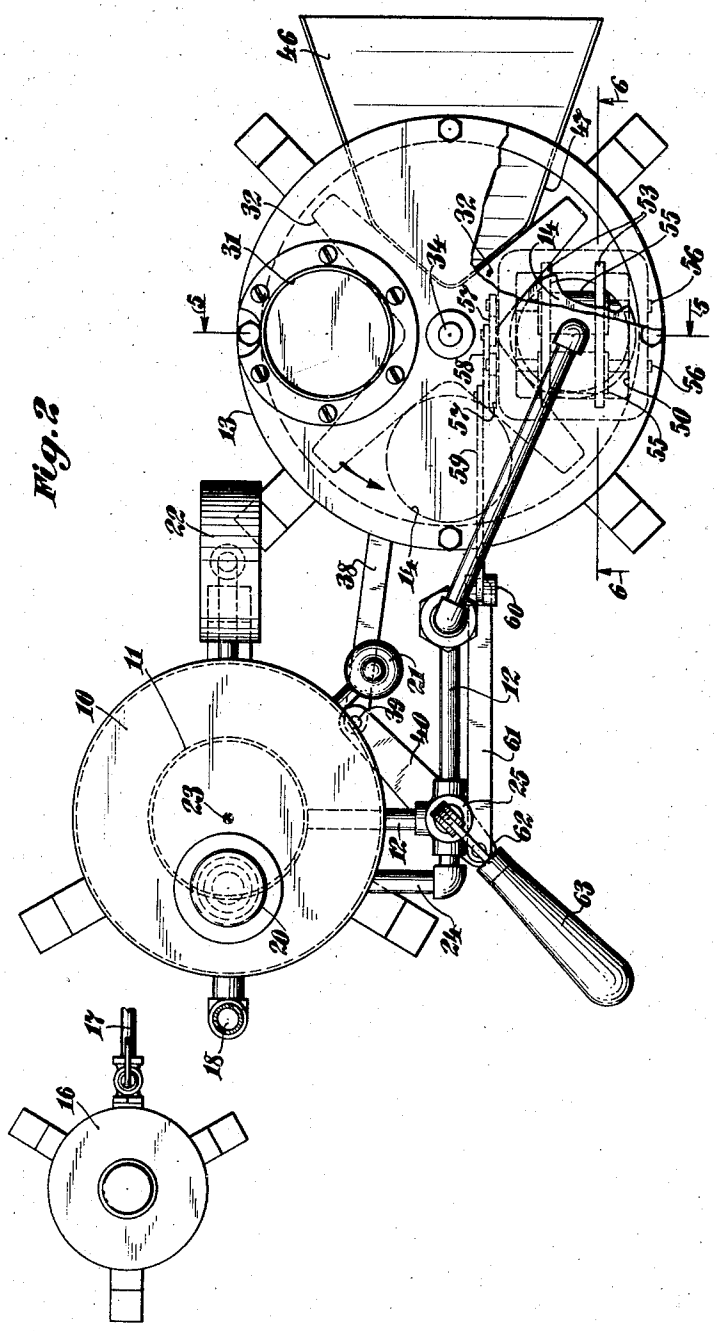

Fig. 2

INVENTOR.
William F. Brown,

BY Philip S. McKean.
ATTORNEY.

June 3, 1941. W. F. BROWN 2,243,895

BEVERAGE MACHINE

Filed Sept. 21, 1938 3 Sheets-Sheet 3

Fig. 3

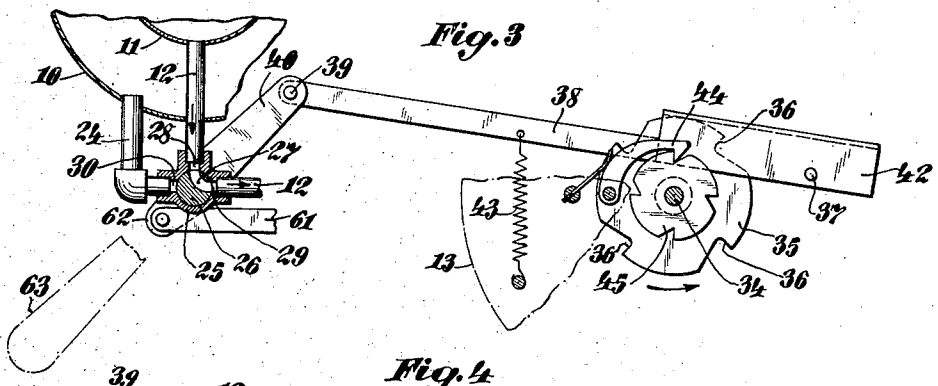

Fig. 4

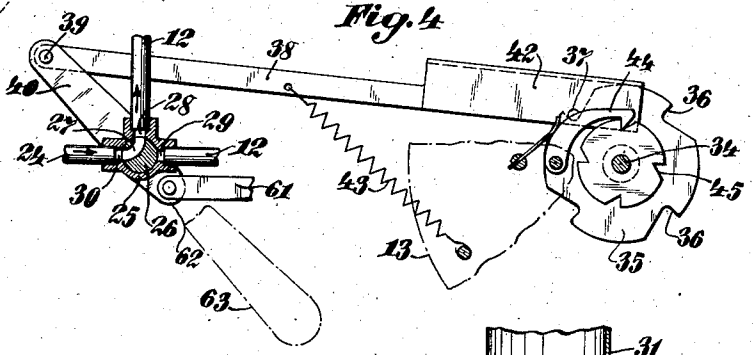

Fig. 5

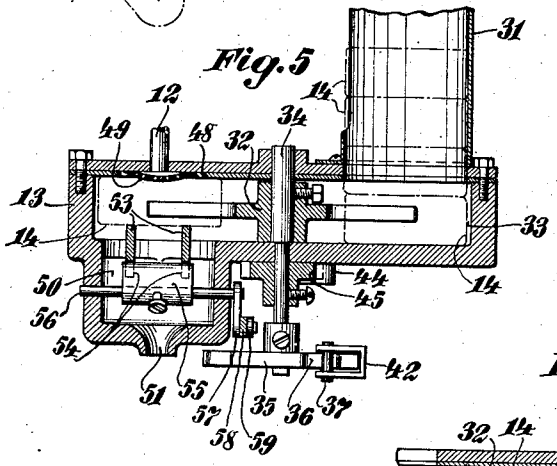

Fig. 6

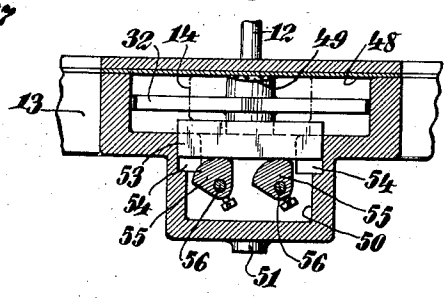

Fig. 7

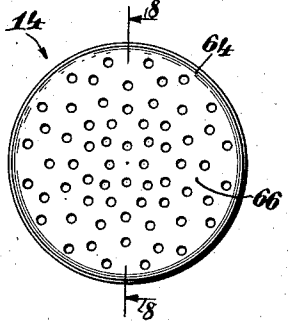

Fig. 8

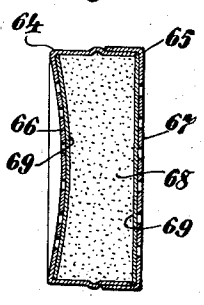

INVENTOR.
William F. Brown,
BY
Philip S. McKean
ATTORNEY.

Patented June 3, 1941

2,243,895

UNITED STATES PATENT OFFICE

2,243,895

BEVERAGE MACHINE

William F. Brown, Flushing, N. Y.

Application September 21, 1938, Serial No. 230,915

3 Claims. (Cl. 53—3)

The invention herein disclosed relates to apparatus for making beverages such as coffee, tea, cocoa and the like.

Objects of the invention are to enable the making of such beverages, a cup at a time, from the fresh material, to provide a simple and practical machine for the purpose and to put up the material in a form for handling in such a machine.

Further objects and the novel features of invention by which the purposes of the invention are attained will appear and are set forth in the following specification.

The drawings accompanying and forming part of the following specification illustrate one of the practical commercial embodiments of the invention. The structure, however, may be modified and changed as regards this disclosure, all within the true intent and broad scope of the invention as hereinafter defined and broadly claimed.

Figure 1 is a broken part sectional front view of the machine.

Figure 2 is a broken plan view of the same.

Figures 3 and 4 are broken part sectional details as on substantially the plane of line 3—4 of Figure 1 illustrating different positions of the parts.

Figures 5 and 6 are broken sectional views as on substantially the planes of lines 5—5 and 6—6 of Figure 2.

Figure 7 is a plan, and

Figure 8 a cross sectional view of one of the individual charges or packages used in the machine, the latter view being a cross section as on line 8—8 of Figure 7.

In the present invention the coffee, tea or other material is packed in unit containers, in the nature of cartridges, and the machine is constructed to take these cartridges one at a time, seal them in position, deliver a measured charge of liquid through the cartridge contents into a cup or other receiver and preferably as a continuation of the automatic operations, discard the used element and locate a fresh one in its place.

The machine illustrated comprises a boiler or hot water holder 10 having a measuring chamber 11 therein connected by piping 12 with a holder 13 for the cartridges 14.

The boiler is shown as heated by a burner 15 operating on fuel supplied from tank 16 through the valved connection 17. Water is supplied to the boiler in the illustration through piping 18 indicated as controlled by a float valve 19. In addition there is shown a filling cap 20, enabling the boiler to be filled by hand, or to be inspected, etc. A pressure relief valve is indicated at 21 and a suitable pressure gage at 22.

The measuring chamber 11 is shown in the form of a receptacle located in the lower portion of the boiler, of a size to hold a cupful or other desired measure of water and having a small vent pipe 23 opening to the vapor space above the normal liquid level in the boiler.

Transfer of liquid from the boiler space into the measuring receptacle is effected in the illustration by piping 24 opening to a combined transfer and delivery valve 25 interposed in the pipe line 12.

The control valve 25 is shown in Figures 3 and 4 as comprising a rotatable valve plug 26 having an angular passage 27 therethrough arranged to register with angularly related ports 28, 29, connected with the discharge piping 12, in one position, Figure 3, and in a second position, Figure 4, to register with port 28, and with a port 30 connected with the filling line 24. With the valve as shown in the Figure 4 position, water will be passed from the boiler into the measuring receptacle, which being vented to the vapor space will fill to its full capacity and the turning of the valve to the Figure 3 position will permit the measuring receptacle to discharge its contents through line 12 to the chamber containing the located charge of material.

To enable quick, successive use of the machine, a supply of the material holders or pellets may be stacked in a vertical guideway 31 and transferred one at a time by a star wheel 32 operating in a generally circular chamber 33, taking in the space beneath the vertical guide and the space beneath the discharge end of pipe 12, as in Figure 5.

The star wheel 32 is shown as mounted on a shaft 34 journaled in the top and bottom walls of the chamber 33. On the lower end of this shaft a ratchet disc 35 is secured, having one-way effective driving notches 36 engageable by a pin 37 carried by a drag link 38 pivoted at 39 to a rock arm 40 on the lower end of the spindle 41 of valve 25. Link 38 is shown as operatively related to the ratchet by having a channeled end portion 42 slidingly engaged over the rim of the ratchet disc and yieldingly retained in such relation by spring 43. The ratchet turning pin 37 is shown as extending across between the sides of the U-shaped or channeled end portion of the link 38, Figure 5.

Backward or retrogressive movement of the

cartridge feed wheel is prevented in the illustration by a spring pressed holding pawl 44 engaged with a retaining ratchet 45 on shaft 34.

In the present disclosure the star wheel has four arms or spokes and is designed to be turned a quarter revolution at each operation. In such movement the cartridge at the bottom of the stack at the loading station will be transferred to the idle or inactive station at the left in Figure 2, the cartridge which previously was at this intermediate station will be transferred to the front station where the infusion is made and a used cartridge at the latter station will be thrown out through a discharge chute 46. In these movements the arms or spokes of the feed wheel slide the cartridges over the bottom of the chamber 33. At the discharge station the bottom is cut away at 47 to drop the cartridges into the inclined discharge chute and at the delivery station special means operate to seal the cartridge in the machine while the infusion is being made.

In the illustration sealing is accomplished by lifting the cartridge up into engagement with a rubber or other suitable packing gasket 48 about the distributing nozzle 49 in the top of the chamber at the end of pipe 12. The bottom of the chamber at this point is formed as a well 50 terminating in a spout 51 for discharging into a cup or other receptacle 52, Figure 1. Bars 53 extending across the well support the cartridge at this station. These bars have vertical movement in guide slots 54 and they are supported on cams 55 on rock shafts 56 which can be turned to lift the cartridges into sealing engagement with the top of the chamber or to lower them to a fully released position ready for travel over into the discharge chute.

The clamping and sealing operation is timed to follow the transfer of the cartridge to the station position and to precede actual delivery of the liquid and the unsealing and releasing movement is timed to take place before the start of the transfer movement of the feed wheel.

This sequential timing is accomplished in the illustration by connecting the lifter cams to be operated from the control valve and by permitting the drag link a certain freedom of movement in one direction, providing in effect, a predetermined degree of lost motion.

In Figures 1 and 2 the rock shafts 56 are shown as having rock arms 57 coupled together in parallel relation by a link 58 and the latter is shown as connected by a link 59, swivel 60 and link 61 to a second rock arm 62 on the valve spindle 41. This second rock arm may in fact, as indicated, be an integral oppositely extending extension of the first rock arm 40.

The lost motion timing feature appears in Figure 3. In this liquid delivery or infusion position of the valve, with the valve operating handle 63 fully to the left, the link 61 is drawn to the left and the cartridge sealing cams 56 are rocked upwardly to seal the cartridge in liquid-tight relation to the liquid delivery nozzle 49, as in Figures 1, 5 and 6. Also at this time the longer rock arm 40 will have thrust the link 38 to the right to carry the pin 37 a distance to the right of the ratchet tooth which it is to engage on the next operation. Consequently, as the valve handle is swung to the right, the pin 37 will have to travel an appreciable distance before it engages the tooth of the ratchet. In this preliminary take-up movement the link 61 operating as a push link and moving to the right rocks the cams 56 to lower the clamp bars 53. Then after the cartridge is fully released the pin 37 engages the ratchet tooth and turns the ratchet disc a quarter turn, from the Figure 3 to the Figure 4 position, thus to cause the star wheel to sweep the used cartridge off into the discharge chute and to carry a fresh cartridge over the then lowered clamp bars 53. In the final position, with the handle fully to the right as in Figure 4, the valve will open up flow from the boiler into the measuring vessel. This is the normal position when not in use, with a cartridge in place ready for instant use at the infusion and delivery station.

To use the machine, therefore, it is simply necessary to swing the handle 63 from the right hand position shown in Figure 4 to the left hand position shown in Figures 1, 2 and 3. In the first part of such motion, the link 61 operating as a pull link will raise the bars 53 to clamp the cartridge in the sealed liquid-tight position, Figure 5, and then when fully sealed, the valve will open up as in Figure 3 to deliver the quantity of liquid measured in the vessel 11 down through the cartridge contents and into the cup or other vessel which has been placed to receive the same. In this operating stroke of the handle the transfer wheel will remain stationary, held so by the spring detent 44 and the drag link 38 will simply slide freely over the edge of the ratchet disc, the pin 37 riding idly over the edge of the disc into position in back of the next ratchet tooth, Figure 3.

The containers for the ground coffee or other material may be made of different materials and in various shapes. At the present time a circular, relatively flat "pill box" type of container is favored since it is inexpensive, easily handled and holds the material in a flat, spread layer, particularly efficient for infusion purposes.

In Figures 7 and 8 a container of this character is illustrated, consisting of telescopically engaged shell-like sections 64, 65, having solid or imperforate side walls, the first section having a dished perforate top wall 66 and the other section having a more or less flat perforate bottom wall 67. The ground coffee or other material is indicated at 68 held in these perforate sections between layers of filter paper 69 or other suitable confining means.

While practical to make the container shells of non-corrosive metal, other materials may be employed, such as paper, cardboard, fiber or the like, having sufficient strength or rigidity for the temporary holding in the infusion position. If desired, these containers may be sealed, as by a gelatinous agent which will dissolve immediately, without affecting the beverage. In place of the circular flat shape the containers may be square, oblong, diamond, oval or other forms.

The cartridges are placed in the machine with the concaved or dished faces uppermost so that in the delivery position the perforated concave top will act as a receiver and spreader for the hot water under pressure coming from the boiler, thus to effect substantially equal and uniform diffusion throughout the mass of coffee or other material in the can or cartridge. While held in this relation the cartridge shell becomes in effect the terminal portion of the conduit through which the hot water is delivered from the pressure vessel, in this case the boiler or supply tank, to the receiving vessel, such as a cup or other holder and so, temporarily at least, constitutes an integral part of the complete ma-

chine. The cartridges may be constructed as open ended shells with the material held in place by a layer or layers of filter paper or the like and these shells have an intermediate or an end flange or flanges by which they can be clamped in place in the machine, so that the water can pass through the open central portions, without contacting the metal or other material of the shells.

What is claimed is:

1. In apparatus of the character disclosed, the combination of a liquid vessel, a measuring chamber in the lower portion of said vessel and having a vent open to space within the upper portion of the vessel, connections between the interior of said vessel and said measuring chamber, a valve interposed in said connections, a delivery line extending from said valve, said valve being ported to effect passage of liquid from the vessel into said measuring chamber in one position and to effect delivery of liquid from the measuring chamber through said delivery line in another position, a holder for a cartridge of infusion material at the end of said delivery line, infusion cartridges to fit said holder, a magazine for retaining a plurality of said cartridges in predetermined order, means operable in timed relation with said valve for effecting transfer of individual cartridges from said mechanism to said cartridge holder and including a cartridge transfer device operable between said magazine and holder and connections from said valve for effecting transfer action of said device in the movement of said valve from the delivery position to the measuring position first described, said holder including a releasable clamp for holding an individual cartridge in liquid receptive relation at the end of the delivery line and cam means operable from said valve for effecting holding action of said clamp after transfer action of said transfer device and prior to delivery of liquid by said valve.

2. In apparatus of the character disclosed, the combination of a liquid vessel, a measuring chamber in the lower portion of said vessel and having a vent open to space within the upper portion of the vessel, connections between the interior of said vessel and said measuring chamber, a valve interposed in said connections, a delivery line extending from said valve, said valve being ported to effect passage of liquid from the vessel into said measuring chamber in one position and to effect delivery of liquid from the measuring chamber through said delivery line in another position, a holder for a cartridge of infusion material at the end of said delivery line, infusion cartridges to fit said holder, a magazine for retaining a plurality of said cartridges in predetermined order, means operable in timed relation with said valve for effecting transfer of individual cartridges from said mechanism to said cartridge holder and including a cartridge transfer device operable between said magazine and holder, connections from said valve for effecting transfer action of said device in the movement of said valve from the delivery position to the measuring position first described, said holder including a releasable clamp for holding an individual cartridge in liquid receptive relation at the end of the delivery line and means operable from the valve for effecting releasing movement of said clamp prior to the transfer action of said transfer device and for effecting holding action of said clamp prior to delivery of liquid by said valve.

3. In apparatus of the character disclosed, the combination of a liquid vessel, a measuring chamber in the lower portion of said vessel and having a vent open to space within the upper portion of the vessel, connections between the interior of said vessel and said measuring chamber, a valve interposed in said connections, a delivery line extending from said valve, said valve being ported to effect passage of liquid from the vessel into said measuring chamber in one position and to effect delivery of liquid from the measuring chamber through said delivery line in another position, a holder for a cartridge of infusion material at the end of said delivery line, infusion cartridges to fit said holder, a magazine for retaining a plurality of said cartridges in predetermined order and means operable in timed relation with said valve for effecting transfer of individual cartridges from said mechanism to said cartridge holder, said delivery line terminating in a nozzle at the cartridge holder and said cartridges being perforate shells shaped to fit about said nozzle and to be held by said holder in such relation.

WILLIAM F. BROWN.