(12) STANDARD PATENT APPLICATION (11) Application No. **AU 2012201872 A1**
(19) AUSTRALIAN PATENT OFFICE

(54) Title
Occlusive device with porous structure and stretch resistant member

(51) International Patent Classification(s)
A61B 17/12 (2006.01) ***A61L 27/04*** (2006.01)
A61F 2/02 (2006.01)

(21) Application No: **2012201872** (22) Date of Filing: **2012.03.30**

(30) Priority Data

(31) Number	(32) Date	(33) Country
13/076,491	**2011.03.31**	**US**

(43) Publication Date: **2012.10.18**
(43) Publication Journal Date: **2012.10.18**

(71) Applicant(s)
Codman & Shurtleff, Inc.

(72) Inventor(s)
Forsythe, Peter;Lorenzo, Juan

(74) Agent / Attorney
Callinans, 1193 Toorak Road, Camberwell, VIC, 3124

2012201872 30 Mar 2012

ABSTRACT

A stretch-resistant occlusive device having an elongated, substantially cylindrical porous elastomeric structure and at least one of an elongated stretch-resistant tube and at least one stretch-resistant filament. The porous structure lies within an elongated outer embolic structure such as a helically wound embolic coil.

2012201872 30 Mar 2012

FIG. 1

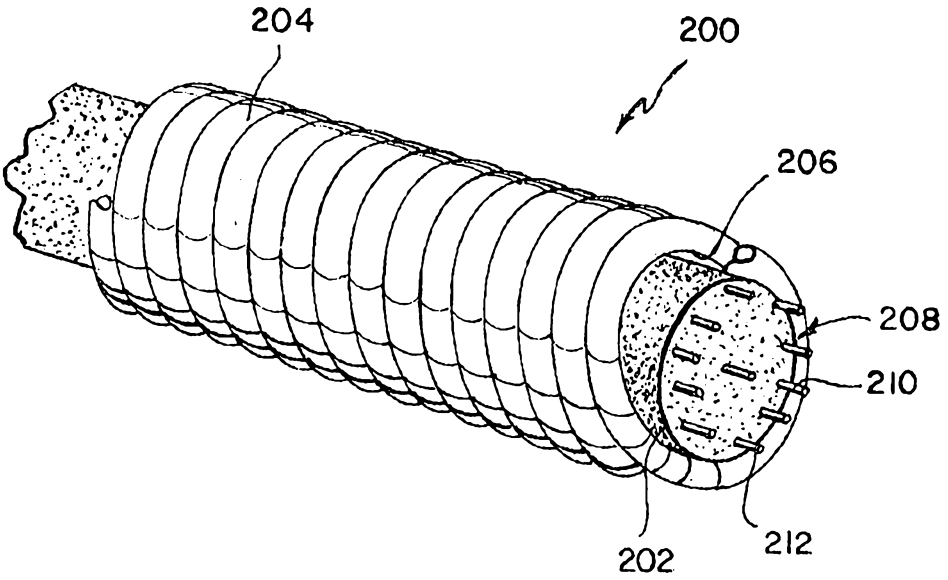

FIG. 2

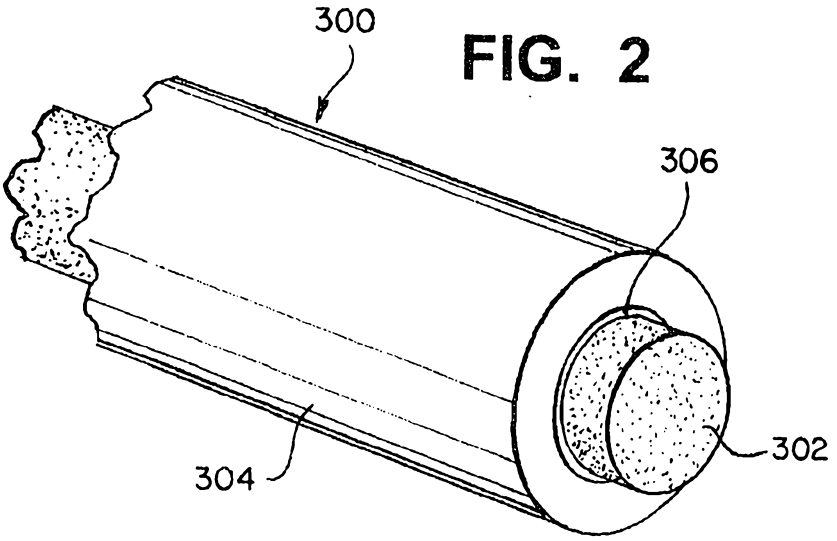

2012201872 30 Mar 2012

AUSTRALIA

Patents Act 1990

ORIGINAL

COMPLETE SPECIFICATION

INVENTION TITLE:

OCCLUSIVE DEVICE WITH POROUS STRUCTURE AND STRETCH RESISTANT MEMBER

The following statement is a full description of this invention, including the best method of performing it known to us:-

2012201872 30 Mar 2012

OCCLUSIVE DEVICE WITH POROUS STRUCTURE AND STRETCH RESISTANT MEMBER

FIELD OF THE INVENTION

[0001] The invention relates to implants within body vessels and more particularly to occlusive devices including embolic coils having resistance to stretching.

BACKGROUND OF THE INVENTION

[0002] Vascular disorders and defects such as aneurysms and other arterio-venous malformations are especially difficult to treat when located near critical tissues or where ready access to a malformation is not available. Both difficulty factors apply especially to cranial aneurysms. Due to the sensitive brain tissue surrounding cranial blood vessels and the restricted access, it is very challenging and often risky to surgically treat defects of the cranial vasculature.

[0003] Alternative treatments include vascular occlusion devices such as embolic coils deployed using catheter delivery systems. In a currently preferred procedure to treat a cranial aneurysm, the distal end of an embolic coil delivery catheter is inserted into non-cranial vasculature of a patient, typically through a femoral artery in the groin, and guided to a predetermined delivery site within the cranium. A number of delivery techniques for vaso-occlusive devices, including use of fluid pressure to release an embolic coil once it is properly positioned, are described by Diaz et al. in U.S. Patent Nos. 6,063,100 and 6,179,857, for example.

[0004] Multiple embolic coils of various lengths, commonly 1 to 30 centimetres, and preselected stiffness often are packed sequentially within a cranial aneurysm to limit blood flow therein and to encourage embolism formation. Typically, physicians first utilize stiffer coils to establish a framework within the aneurysm and then select more flexible coils to fill spaces within the framework. Ideally, each coil conforms both to the aneurysm and to previously implanted coils. Each successive coil is selected individually based on factors including stiffness, length, and preformed shape which the coil will tend to assume after delivery.

2012201872 30 Mar 2012

[0005] During implantation, the physician manipulates each embolic coil until it is in a satisfactory position, as seen by an imaging technique such as fluoroscopic visualization, before detaching the coil from the delivery system. It is highly desired for both ends of each coil to remain positioned within the aneurysm after delivery, because a length of coil protruding into the main lumen of the blood vessel invites undesired clotting external to the aneurysm. After each successive coil is detached, the next coil is at an increasing risk of becoming entangled in the growing mass of coils, thereby restricting the depth of insertion for that coil into the aneurysm.

[0006] Difficulties may arise due to stretching of the embolic coils during repositioning or attempted retrieval of the coils, especially if the coil becomes entangled and complete insertion of the coil into the aneurysm is not accomplished. If pulling forces applied to a coil exceed its elastic limit, the coil will not return to its original shape. A stretched coil exhibits diminished pushability or retractability, and becomes more difficult to manipulate into an optimal position or to be removed. Moreover, a stretched coil occupies less volume than an unstretched coil, which increases the number of coils needed to sufficiently pack the aneurysm to encourage formation of a robust embolus positioned wholly within the aneurysm.

[0007] There have been a number of attempts to address stretch-related problems in embolic coils. Several stretch-resistant devices are disclosed in U.S. Patent No. 5,853,418 to Ken et al., having a primary coil and an elongated stretch-resisting member fixedly attached to the primary coil in at least two locations. While Ken et al. mention possible hydraulic delivery of their coils through a lumen of a catheter, they teach that it is desirable to controllably release each coil using a severable or mechanical joint such as an electrolytically detachable joint. Such joints are not compatible with certain delivery systems, and some physicians prefer not to use electrical currents to detach embolic coils from a delivery catheter.

[0008] Another embolic device, described in U.S. Patent No. 6,183,491 by Lulo, has a support wire attached at one end to a proximal end of the coil and attached at its other end to an attachment point located in an intermediate portion of the coil. The embolic device has a closed proximal end and is suitable for hydraulic release from a delivery system after the device is properly positioned. However, only the proximal portion of the coil resists stretching; any length

2012201872 30 Mar 2012

of coil distal to the intermediate attachment point is unprotected from excessive elongation forces.

[0009] A vaso-occlusive device described by Schaefer et al. in U.S. Patent Publication No. 2004/0006362 has a number of elongate filars conjointly wound into respective helical coils having respective windings arranged in an alternating fashion to define a hollow axial lumen. It is mentioned that a flexible hollow tube or porous sponge may be inserted within the axial lumen to serve a reservoir to deliver therapeutic agents. Schaefer et al. note that the bending resistance of the occlusive device may be increased by the inserted tube or sponge.

[0010] There are several patents by Greene, Jr. et al., including U.S. Patent No. 7,491,214, disclosing one or more expansile embolizing elements to assist occlusion. These elements may be made of a hydrophilic, macroporous hydrogel foam material. Several types of occlusive devices having a coating material such as a porous, non-absorbable foam, preferably made of polyvinylidene fluoride-co-hexafluropropylene (PVDF/HFP), are disclosed by Yang et al. in U.S. Patent Publication No. 2007/0239205.

[0011] It is therefore desirable to have an improved stretch-resistant occlusive device which retains flexibility and conformability during insertion into a vascular malformation yet resists stretching along its entire length when pulling forces are applied to it. It is also desirable to have such a device which enhances thrombus formation and cellular proliferation, especially to treat cerebral aneurysms.

SUMMARY OF THE INVENTION

[0012] An object of the present invention is to maintain high flexibility and conformability in an occlusive device while providing resistance to stretching.

[0013] Another object of the present invention is to provide stretch resistance without impairing the ability of an embolic coil to assume a pre-formed shape after delivery to an arterio-venous malformation.

2012201872 30 Mar 2012

[0014] It is yet another object of the invention to provide novel stretch-resistant embolic devices which promote thrombus formation and encourage cellular proliferation to accelerate vessel remodelling within an aneurysm.

[0015] This invention results from the realization that stretch resistance can be added to occlusive devices such as embolic coils by utilizing at least one of a stretch-resistant tube and/or one or more filaments together with an elongated porous elastomeric structure which enhances thrombus formation and cellular proliferation.

[0016] This invention features an occlusive device having an elongated, substantially cylindrical porous elastomeric structure and at least one of an elongated stretch-resistant tube and at least one stretch-resistant filament. The elongated porous structure lies within an elongated outer embolic structure such as a helically-wound embolic coil.

[0017] In some embodiments, the elongated porous structure includes open-cell foam material, having an average pore diameter of one micron to 100 microns, and a plurality of stretch resistant filaments are embedded within the elongated porous structure. In certain embodiments, the elongated porous structure includes a biodegradable material. In one embodiment, a gap separates the elongated porous structure from the outer embolic structure and, in another embodiment, the elongated porous structure includes a low-friction layer separating it from the outer embolic structure. In yet another embodiment, the elongated porous structure includes a layer of dissolvable material separating it from the outer embolic structure.

[0018] In certain embodiments, the outer embolic structure is a helically wound coil and, in some embodiments, the helically wound coil is substantially cylindrical and defines the coil lumen to have a lumen diameter at its proximal end. In one embodiment, the porous elastomeric structure is decoupled from the helically wound coil to enhance flexibility.

BRIEF DESCRIPTION OF THE DRAWINGS

[0019] In what follows, preferred embodiments of the invention are explained in more detail with reference to the drawings, in which:

2012201872 30 Mar 2012

[0020] FIG. 1 is a schematic perspective view of a portion of an occlusive device according to the present invention having an elongated porous structure within a helically wound coil;

[0021] FIG. 2 is a schematic view of another occlusive device according to the present invention having an elongated porous structure within a stretch-resistant tube;

[0022] FIG. 3 is a partially sectioned top view of a vascular occlusive coil hydraulic deployment system with an improved occlusive device according to the present invention;

[0023] FIG. 4 is an enlarged partially sectioned view showing the distal gripper portion of the deployment system releasably holding the headpiece of the occlusive device;

[0024] FIG. 5 is a schematic rendering of the occlusive device of FIG. 4 being delivered into an aneurysm of a patient;

[0025] FIG. 6 is a side sectioned view of the occlusive device shown in FIG. 4;

[0026] FIG. 7 is a cross-sectional view of FIG. 6;

[0027] FIG. 8 is a side view of another headpiece utilized according to the present invention; and

[0028] FIG. 9 is a side view of an anchor filament utilized according to the present invention.

DETAILED DESCRIPTION OF THE PRESENTLY PREFERRED EMBODIMENTS

[0029] Stretch resistance and the ability to enhance thrombus formation is provided to occlusive devices such as embolic coils according to the present invention by utilizing an elongated, substantially cylindrical porous elastomeric structure and a stretch resistant member comprising at least one of an elongated stretch-resistant tube and/or at least one stretch-resistant

2012201872 30 Mar 2012

filament. The elongated porous structure lies within an elongated outer embolic structure, which in some constructions is a helically wound embolic coil.

[0030] Occlusive device 200, FIG. 1, includes an elongated porous structure 202 within a helically wound coil 204. In this construction, the outer diameter of porous structure 202 is less than the inner diameter of coil 204 such that a gap 206 separates the two components. In this construction, gap 206 decouples porous structure 202 from coil 204 to maintain the flexibility of coil 204. Device 200 further includes stretch resistant member 208 having a plurality of stretch resistant filaments such as filaments 210 and 212.

[0031] Preferably, porous structure 202 serves as a three-dimensional elastomeric scaffold for cellular proliferation to accelerate vessel remodelling at the site of an aneurysm into which device 200 is implanted. The average pore size and number of pores affects the overall porosity of structure 202. In some constructions, acceptable parameters include average pore diameters ranging between one micron to 100 microns, more preferably three microns to 50 microns, as measured from scanning electron microscope images along a plane substantially parallel to the surface of the porous structure. In some constructions, the pore sizes are distributed over a wide size range. It is preferred to have a number of pores larger than three microns to easily accommodate platelets to enhance thrombus formation. Suitable biodegradable materials for structure 202 include polycaprolactone-co-glycolyde (Cap-Gly), polyvinylidene fluoride-co-hexafluoropropylene (PVDF-HFP), polyglycolic acid (PGA), and polyglycolic lactic acid (PGLA), also known as poly(lactic-co-glycolic acid)(PLGA). Suitable biocompatible but non-biodegradable materials include urethane, nylon and other polyamides, and expanded polytetrafluoroethylene (EPTFE).

[0032] Stretch resistant member 208 has filaments mechanically attached at the terminal ends of embolic coil 204. The cumulative cross-sections of all of the filaments comprising stretch resistant member 208 is sufficient to sustain a desired tensile load, while maintaining overall desired flexibility of device 200. Stretch resistant member 208 can be formed from biocompatible metallic or polymeric materials capable of being manufactured to sustain the desired tensile load. Suitable materials include platinum-tungsten (PtW), stainless steel, gold (Au), platinum-iridium (PtIr), nylon, Cap-Gly, PGLA, polylactic acid (PLA), EPTFE,

2012201872 30 Mar 2012

polytetrafluoroethylene (PTFE), ethylene tetrafluoroethylene (ETFE), polypropylene, polyester, and nitinol (NiTi). In some constructions, the diameters of stretch-resistant filaments formed from these materials range from 0.0005 inch to 0.003 inch.

[0033] One technique for forming device 200 includes selecting five filaments more than twice as long as the desired final length of device 200 and folding them in half to form proximal bights with ten filament segments running the desired length of device 200. The proximal bights may be slidably engaged with an anchor filament or other proximal retaining element as described below in more detail. Foam is cast about the filaments to form a three-dimensional, open-cell scaffold structure. The distal ends of the filament segments can be melted to form a distal bead as described in more detail below.

[0034] In another manufacturing technique, the porous structure is formed as a solidified foam, with internal stretch resistant filaments distributed therein, in an extended length which is then cut to multiple desired lengths, one length for each device according to the present invention. The ends of each foam length is then dissolved to expose the filaments for attachment at one or both ends of a device 200.

[0035] In yet another technique, foam material is injected in liquid form into the lumen of a coil containing one or more stretch resistant members, such as coils disclosed by Wilson et al. in U.S. Patent No. 7,572,246, which is incorporated herein in its entirety. The proximal bight of the stretch resistant member is held by a connector fiber which detachably mounts the stretch resistant member to a pusher member during implantation. Alternatively, foam material is cast around one or more stretch resistant members before the assembly is inserted into the coil lumen.

[0036] An alternative occlusive device 300, FIG. 2, includes an elongated porous structure 302 and a stretch resistant tube 304. Porous structure 302 further includes an optional layer 306 which in some constructions is a lubricant and in other constructions is a coating or tube formed of a lubricious or dissolvable material. Preferably, tube 304 is formed of a biodegradable material such as Cap-Gly which degrades relatively quickly to expose structure 302 to blood to enhance thrombus formation. In other constructions, one or more stretch

2012201872 30 Mar 2012

resistant filaments are laid through layer 306 to assist or replace stretch resistance provided by tube 304.

[0037] In some constructions, helically wound wire or other materials are wrapped or otherwise placed around tube 304. Although no stretch resistant filaments are illustrated in FIG. 2, one or more filaments can be added within porous structure 302 to enhance the stretch resistance provided by tube 304.

[0038] In certain constructions, the occlusive device utilizes a novel proximal headpiece portion as described by Lorenzo et al. in U.S. Patent Application No. 12/816,694 filed June 16, 2010, entitled "Occlusive Device with Stretch Resistant Member and Anchor Filament" and incorporated herein by reference. The headpiece defines a headpiece lumen, and a novel proximal anchor filament is passed distally through the headpiece lumen and joined with a flexible distal stretch resistant member. Together, the anchor filament and the stretch resistant member may be referred to as a stretch-resistant assembly which extends along the entire axial interior of the helically wound coil to minimize undue coil elongation without impairing coil flexibility and conformability during and after implantation.

[0039] FIG. 3 illustrates an occlusive device 100 according to the present invention releasably held at the distal end 12 of a vascular occlusive coil hydraulic deployment system 10. System 10 includes a hydraulic injector or syringe 14 coupled to the proximal end of a catheter 16. Syringe 14 includes a threaded piston 18 which is controlled by a handle 20 to infuse fluid under high pressure into the interior of catheter 16 when it is appropriate to hydraulically release device 100. Winged hub 22 aids in the insertion of the catheter 104 into the vasculature of a patient.

[0040] The occlusive device 100, which is an embolic coil in this construction, and the distal end 12 of catheter 16 are shown in more detail in FIG. 4. For ease of illustration, no foam or other porous structure is shown in FIGS. 4-7. Distal end 12 includes a gripper portion 30, shown in sectional view, tightly holding proximal portion 102 of headpiece 104. Enlarged ring 106 of headpiece 104 limits insertion of headpiece 104 into gripper portion 30, serving as a distal stop as device 100 is releasably connected to catheter 16 prior to insertion into a patient.

2012201872 30 Mar 2012

Another surface of ring 106 serves as a proximal stop during insertion of headpiece distal end 107 into proximal portion 108 of helically wound coil 110, defining proximal coil lumen 109, as described in more detail below. In this construction, proximal-most coil turn 112 of coil 110 abuts ring 106.

[0041] As shown in FIG. 5, distal end 12 of catheter 16 may be retracted in the direction of arrow 40 to reposition embolic coil 100 relative to aneurysm A. When the physician is satisfied with the placement of the entire length of device 100 including its proximal and distal ends, hydraulic pressure is applied, typically at least 150 psi to about 700 psi, more typically between 500 psi to 650 psi, through catheter 16 to forcibly release headpiece 104 and thus relinquish control over device 100. After the headpiece 104 is released, catheter 16 of the delivery system is withdrawn, such as in the direction of arrow 40.

[0042] Referring particularly to FIGS. 4 and 6, hydraulic integrity of headpiece 104, which would otherwise be compromised by headpiece lumen 122, necessary to withstand high fluid release pressures is provided in this construction by proximal bead 114 which also structurally secures proximal legs 116 and 118 of anchor filament 120 extending distally through headpiece lumen 122. A distal portion of anchor filament 120 forms bight 124 which defines eye 126. Legs 116 and 118 in this construction are portions of a continuous wire which is folded to form bight 124; in other constructions, anchor filament 120 is a unitary element defining eye 126 similar to a sewing needle having an eye through which thread is passed.

[0043] A stretch resistant member 130 passes through eye 126 and extends distally as a loop with two legs 132 and 134 that terminate in distal bead 136 having atraumatic distal surface 138. A cross-sectional view through proximal coil portion 108 showing headpiece distal end 107, and anchor bight 124 distal to headpiece lumen 122, as seen within coil lumen 109 is illustrated in FIG. 7, as if stretch member legs 132 and 134 and coil 110 are extending out of the drawing toward the viewer. Distal bead 136, FIG. 6, is secured to distal portion 140 of coil 110 at least by having an enlarged head 139 which is greater in diameter than distal coil lumen 142 of distal coil portion 140.

2012201872 30 Mar 2012

[0044] A procedure for manufacturing stretch-resistant occlusive devices such as embolic coils according to one embodiment of the present invention includes some or all of the following steps. A distal end of a headpiece is attached to a proximal end portion of a helically wound coil defining a coil lumen extending along the entire axial length of the coil and having a coil distal end portion. The headpiece also has a proximal end and defines a headpiece lumen extending between the proximal and distal ends of the headpiece. Next, a distal portion of an anchor filament, defining an eye, is advanced distally through the headpiece lumen and through the coil lumen to expose the eye beyond the coil distal end portion. A stretch resistant member is passed through the eye to join the member with the filament to create a stretch-resistant assembly extending through the coil lumen and the headpiece lumen, and the anchor filament is retracted to bring the eye in proximity to the distal end of the headpiece. The anchor filament is secured to the proximal end of the headpiece so that the eye is positioned distal to the distal end of the headpiece, and the stretch resistant member is secured to the distal end of the coil, with an atraumatic distal surface, so that proximal and distal ends of the stretch-resistant assembly are secured to resist pulling forces which may be applied to the helically wound coil during implantation in a patient.

[0045] Helically wound coil stock is formed initially by winding a platinum-tungsten alloy wire about an elongated, non-curved mandrel to generate tight uniform helical turns defining a central lumen occupied by the mandrel. It is currently preferred for tungsten to comprise approximately six percent to ten percent of the alloy wire. Stiffer framing coils are formed by using round wire having a diameter of approximately 0.003 inch. More flexible fill coils utilize round alloy wire having a diameter of approximately 0.002 inch while even softer coil wire is approximately 0.0015 inch in diameter. The softer wire typically is wound over a slightly larger mandrel to generate a slightly larger wound coil diameter defining a correspondingly larger coil lumen. In other constructions, different alloys or material, or a tapered mandrel geometry, could be utilized to alter flexibility of the resulting helically wound coil.

[0046] After the mandrel is removed, the initial linear coil stock is cut to desired lengths, typically 1.5 cm to 30 cm, and each length may be thermally "set" into a desired overall curved,

2012201872 30 Mar 2012

non-linear configuration that it will tend to assume after implantation. Configurations having a curved longitudinal axis include a helical or spiral shape and even more complex shapes. Various detachable embolic coils, each having a solid proximal headpiece that is releasably held by a polymeric distal gripper portion of a hydraulic delivery tube during cranial implantation, are currently commercially available as part of the TRUFILL® DCS ORBIT® Detachable Coil System from Codman & Shurtleff, Inc. of Raynham, Massachusetts.

[0047] Novel headpieces according to the present invention define a headpiece lumen through which novel anchor filament is passed after the headpiece is attached to the proximal end of the external coil by a solder joint, welding or other secure bond. Examples of compatible headpiece and anchor filament components prior to assemblage are shown in FIGS. 8 and 9, respectively, but are not drawn to scale. Headpiece 104a, FIG. 8, has a total length TL of 0.042 inch, a proximal portion length PL of 0.034 inch, and a distal portion length DL of 0.007 inch. Headpiece 104a defines a headpiece lumen 122a, shown in phantom, having a diameter of approximately 0.004 inch and extending from distal end 107a to proximal end 150a. A ring 106a has a longitudinal length RL of 0.001 and an overall diameter of 0.015 inch. Ring 106a separates proximal portion 102a, having a mean proximal diameter of 0.008 inch, from distal portion 152a, having a mean distal diameter of 0.009. In other constructions, the mean proximal and distal diameters are substantially the same, as shown in FIG. 6, or may differ by a larger amount, depending on the expected lumen diameters of a delivery catheter gripper portion and a proximal coil lumen, respectively, to be matched with the different portions of the headpiece. Preferably, proximal end 150a, FIG. 8, is curved or chamfered to facilitate mating with the delivery catheter gripper portion, and headpiece 104a is formed of substantially the same material as the helically wound coil to which it will be attached by a secure bond as described above.

[0048] Anchor filament 120a, FIG. 9, is formed in this construction using round platinum-tungsten alloy wire, preferably substantially the same alloy as utilized for the headpiece and helically wound coil, having a diameter of approximately 0.0015 inch, and a length more than twice as great as the combined length of the helically wound coil with attached proximal headpiece. The alloy wire is bent approximately in half, that is, it is doubled over, to form a wire loop having a bight 124a defining an eye 126a with two wire legs 116a and 118a extending in

2012201872 30 Mar 2012

parallel from the bight 124a such as shown in FIG. 9, with an effective length that is greater than the total combined length of the coil and headpiece. The coil with attached headpiece is placed in a first, anchor filament advancement fixture to apply force to both ends until the longitudinal axis becomes substantially non-curved. The anchor bight is advanced distally, through the headpiece lumen and central coil lumen, by pushing on ends 160a and 162a or by grasping the wire legs 116a and 118a of anchor filament 120a, until the bight 124a emerges beyond the distal end of the helically wound coil. After the anchor bight 124a is exposed, a stretch resistant member is threaded through the eye to form a loop extending distally away from the coil.

[0049] Sutures provide acceptable stretch resistant members. A preferred non-absorbable suture is PROLENE® polypropylene monofilament suture, especially size 10-0 which is thinner than a human hair, available from Ethicon, Inc. Preferred absorbable sutures include VICRYL® polyglycolic acid monofilament or multifilament sutures, also available from Ethicon, Inc. Other polymeric or metallic fibres or wires can be utilized as desired according to the present invention. Further, the material utilized for the stretch resistant member, or an additive to that material, may be selected to have thrombogenic properties to promote clotting.

[0050] Next, the anchor filament with joined stretch resistant member is pulled proximally until the bight is positioned to be spaced several coil wire diameters from the distal end of the headpiece such as shown in FIG. 6. This bight alignment step can be accomplished at the first, anchor filament advancement fixture to maintain a substantially linear longitudinal coil axis, or at another fixture at a subsequent manufacturing station to straighten the helically wound coil during this step. Proper alignment is determined visually in one procedure according to the present invention by counting between one to six coil turns extending distally from the headpiece, and positioning the bight within that range of coil turns. It is preferred that the bight does not contact any edges of the headpiece, thereby avoiding potential chafing against the bight or the stretch resistant member. One advantage of the present invention is that axial adjustment of the bight during this step of manufacture is readily accomplished by pulling the anchor filament proximally or pulling the stretch resistant member distally to change the position of the bight relative to the headpiece.

2012201872 30 Mar 2012

[0051] After the bight is properly positioned relative to the distal end of the headpiece, excess anchor filament material is trimmed. Heat, such as a plasma flame if the anchor filament is metallic, is applied to the remaining proximal filament ends until they melt and a proximal bead is formed at the proximal end of the headpiece, extending into the headpiece lumen such as shown in FIG. 6, to secure the anchor filament to the headpiece with structural integrity as soon as the bead solidifies. Preferably, the proximal bead appears flush with or smaller than the outer diameter of the headpiece. The solidified proximal bead also restores hydraulic integrity to the headpiece by sealing the headpiece lumen.

[0052] Excess stretch resistant member material extending beyond the distal end of the coil is then trimmed, and heat is applied to melt the ends of the remaining material to form a distal bead, preferably concentric and substantially hemispherical in shape with a substantially smooth, atraumatic, low-friction outer surface to facilitate entry and conformance of the occlusive device during its delivery into a malformation of a patient. The amount of stretching of the helically wound coil permitted by the stretch resistant member depends on factors including the composition and thickness of stretch resistant member material, including its tensile properties, as well as the overall length of the stretch resistant member. For example, any desired amount of slack relative to the length of the coil can be established during manufacture by elongating the coil by the desired amount using a fixture before melting the distal portion of the stretch resistant member to form the distal bead, which generates that amount of slack in the stretch resistant member when the coil is released from the fixture.

[0053] The anchor filament and stretch resistant member together form a stretch-resistant assembly extending through the coil lumen and the headpiece lumen to minimize coil elongation when pulling forces are applied to the occlusive device. It is desirable for the stretch-resistant assembly to have a pull strength of at least 0.02 pounds at its proximal and distal ends when the pull strength of the coil to headpiece solder joint is about 0.05 pounds.

[0054] Thus, while there have been shown, described, and pointed out fundamental novel features of the invention as applied to a preferred embodiment thereof, it will be understood that various omissions, substitutions, and changes in the form and details of the devices illustrated, and in their operation, may be made by those skilled in the art without

2012201872 30 Mar 2012

departing from the spirit and scope of the invention. For example, it is expressly intended that all combinations of those elements and/or steps that perform substantially the same function, in substantially the same way, to achieve the same results be within the scope of the invention. Substitutions of elements from one described embodiment to another are also fully intended and contemplated. It is also to be understood that the drawings are not necessarily drawn to scale, but that they are merely conceptual in nature. It is the intention, therefore, to be limited only as indicated by the scope of the claims appended hereto.

[0055] Every issued patent, pending patent application, publication, journal article, book or any other reference cited herein is each incorporated by reference in their entirety.

[0056] Throughout this specification and the claims which follow, unless the context requires otherwise, the word "comprise", and variations such as "comprises" and "comprising", will be understood to imply the inclusion of a stated integer or step or group of integers or steps but not the exclusion of any other integer or step or group of integers or steps.

[0057] The reference to any prior art in this specification is not and should not be taken as an acknowledgement or any form of suggestion that the prior art forms part of the common general knowledge.

2012201872 30 Mar 2012

CLAIMS

1. A stretch-resistant occlusive device insertable into the vasculature of a patient, comprising:

an elongated, substantially cylindrical porous elastomeric structure;

at least one of an elongated stretch-resistant tube and at least one stretch-resistant member; and

the elongated porous structure lying within an elongated outer embolic structure.

2. The occlusive device of claim 1 wherein the elongated porous structure includes open-cell foam material.

3. The occlusive device of claim 1 wherein a plurality of stretch-resistant filaments are embedded within the elongated porous structure to serve as the stretch-resistant member.

4. The occlusive device of claim 1 wherein the elongated porous structure has an average pore diameter of one micron to one hundred microns.

5. The occlusive device of claim 1 wherein the elongated porous structure includes a biodegradable material.

6. The occlusive device of claim 1 wherein a gap separates the elongated porous structure from the outer embolic structure.

7. The occlusive device of claim 1 wherein the elongated porous structure includes a low-friction layer separating it from the outer embolic structure.

8. The occlusive device of claim 1 wherein the elongated porous structure includes a layer of a dissolvable material separating it from the outer embolic structure.

9. The occlusive device of claim 1 wherein the outer embolic structure includes a helically wound coil.

2012201872 30 Mar 2012

10. The occlusive device of claim 1 wherein the elongated stretch-resistant tube is formed from at least one biodegradable material.

A stretch-resistant embolic coil device comprising:
a substantially cylindrical helically wound coil defining a coil lumen extending along the entire axial length of the coil, the coil having a distal end portion and a proximal end portion with a proximal coil lumen diameter;

an elongated, substantially cylindrical porous elastomeric structure disposed within the coil lumen; and

at least one stretch resistant filament positioned within the coil lumen and secured to at least the distal end portion of the coil.

12. The embolic coil device of claim 11 wherein the elongated porous elastomeric structure includes a layer of a dissolvable material separating it from the helically wound coil.

13. The embolic coil device of claim 11 wherein the stretch resistant filament is composed of polymeric material.

14. The embolic coil device of claim 11 wherein the elongated porous structure includes open-cell foam material.

15. The embolic coil device of claim 11 wherein the stretch resistant filament is embedded within the elongated porous structure.

16. The embolic coil device of claim 11 wherein the elongated porous structure has an average pore diameter of one micron to one hundred microns.

17. The embolic coil device of claim 11 wherein the elongated porous structure includes a biodegradable material.

18. The embolic coil device of claim 11 wherein a gap separates the elongated porous structure from the outer embolic structure.

2012201872 30 Mar 2012

19. The embolic coil device of claim 11 wherein the elongated porous structure includes a low-friction layer separating it from the outer embolic structure.

20. A stretch-resistant embolic coil device comprising:

a substantially cylindrical helically wound coil defining a coil lumen extending along the entire axial length of the coil, the coil having a distal end portion and a proximal end portion with a proximal coil lumen diameter;

an elongated, substantially cylindrical porous elastomeric structure disposed within the coil lumen and formed as an open-cell foam; and

a plurality of stretch resistant filaments positioned within the elastomeric structure and secured to at least the distal end portion of the coil.

21. A stretch-resistant occlusive device insertable into the vaculature of a patient, substantially as described herein with reference to the accompanying drawings.

22. A stretch-resistant embolic coil device, substantially as described herein with reference to the accompanying drawings.

2012201872 30 Mar 2012

FIG. 1

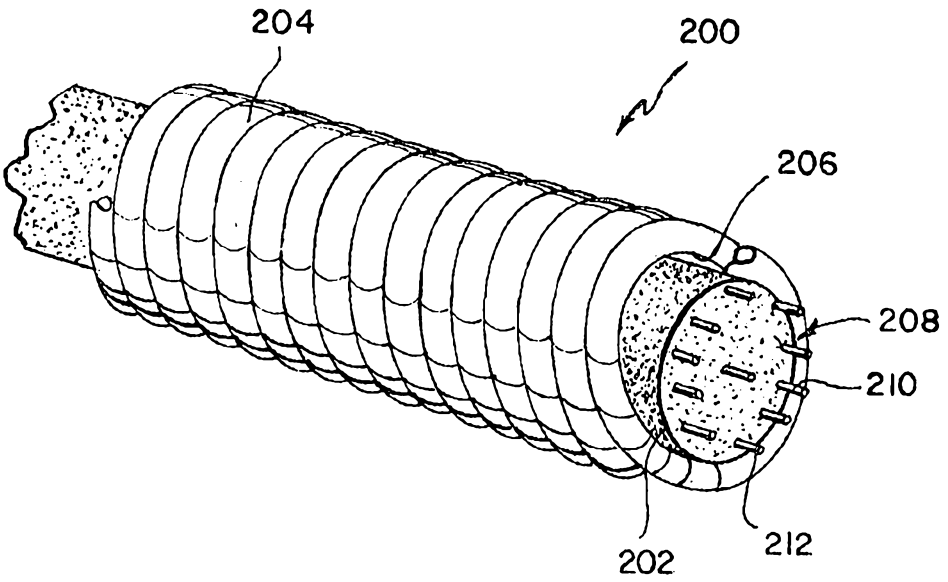

FIG. 2

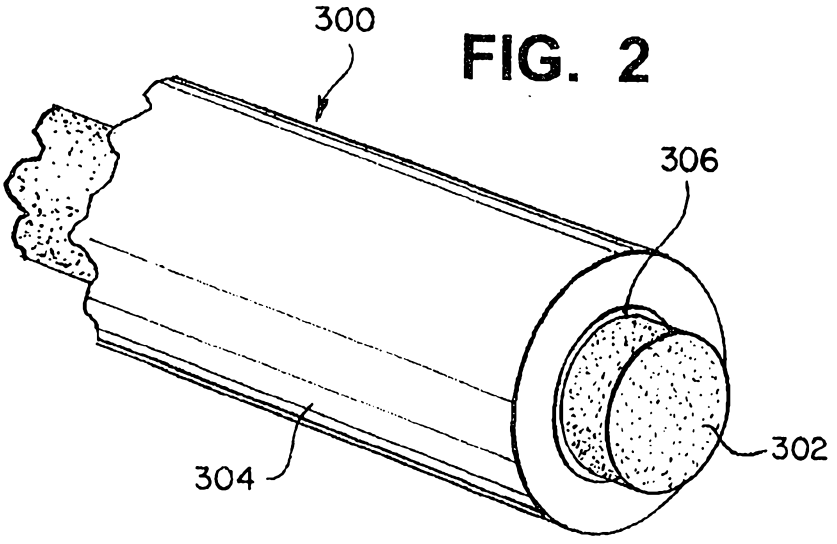

FIG. 3

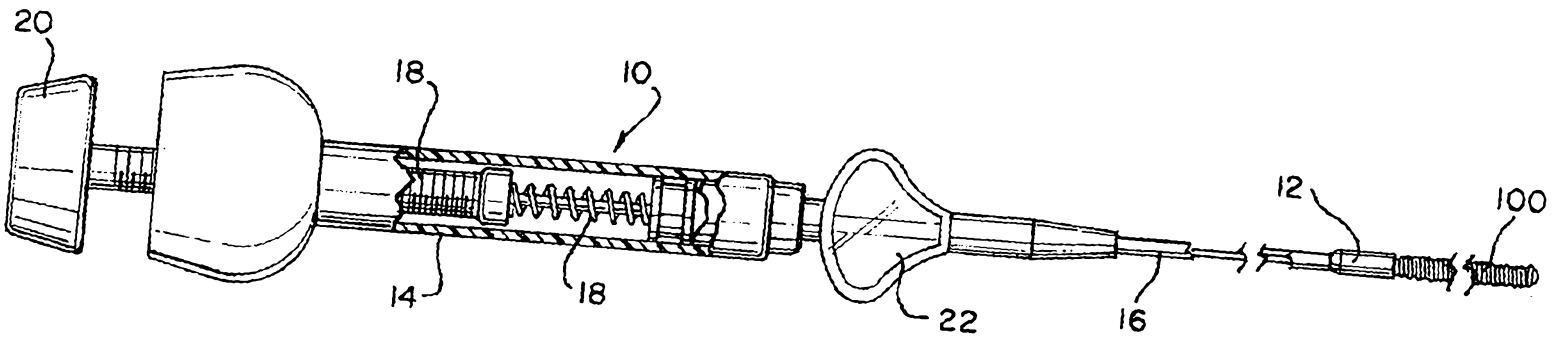
20
18
10
12
100
14
18
22
16

FIG. 4

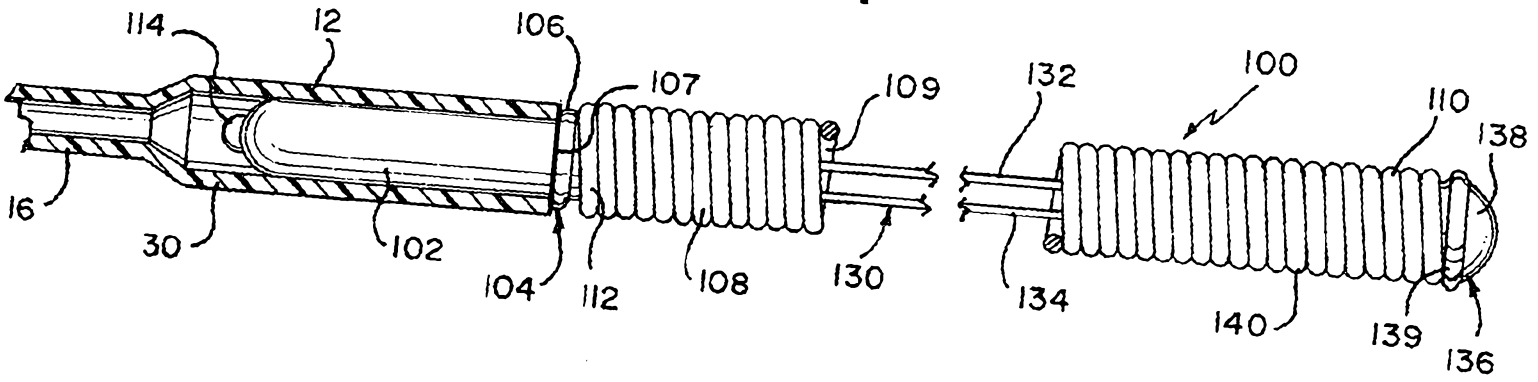
114
12
106
107
109
132
100
110
138
16
30
102
104
112
108
130
134
140
139
136

FIG. 5

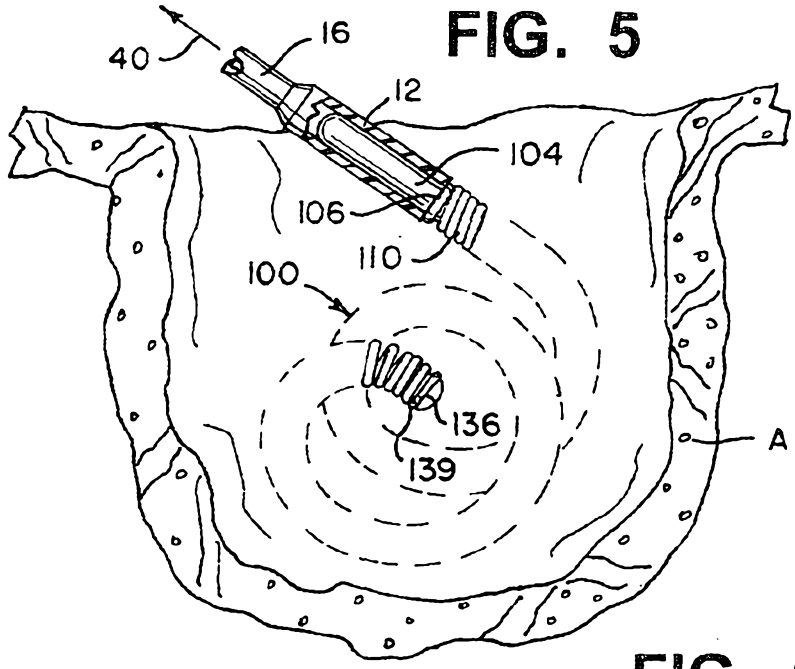

FIG. 7

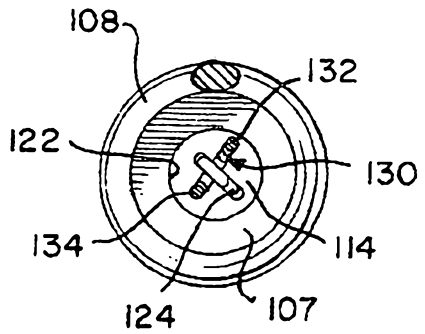

FIG. 6

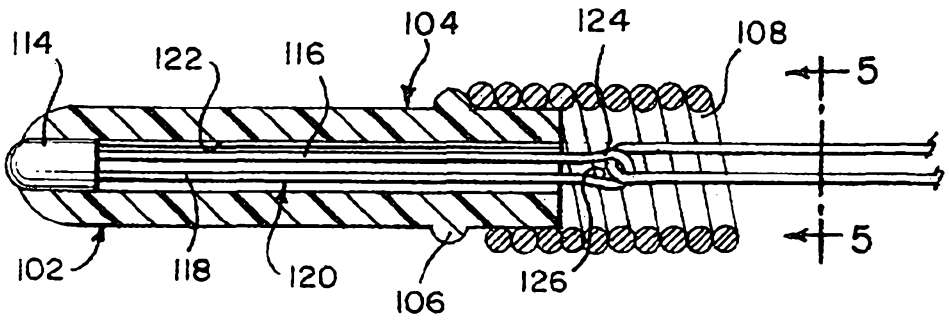

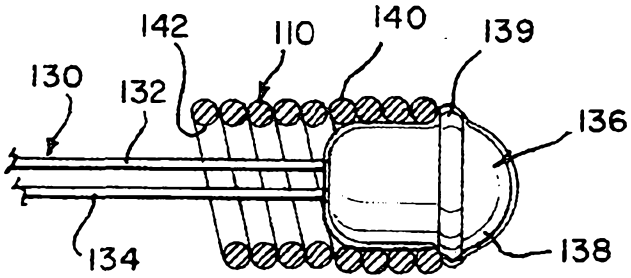

2012201872 30 Mar 2012

FIG. 8

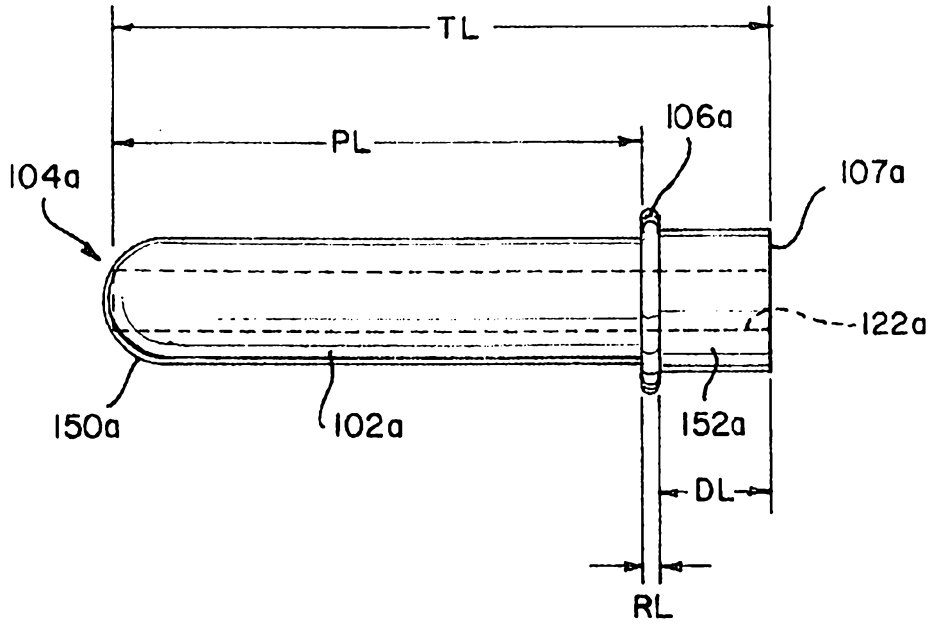

FIG. 9

