March 21, 1933. R. W. JOHNSON 1,902,451

THERMOSTATIC SWITCH FOR USE WITH HEATERS

Filed April 19, 1929

FIG. 1.

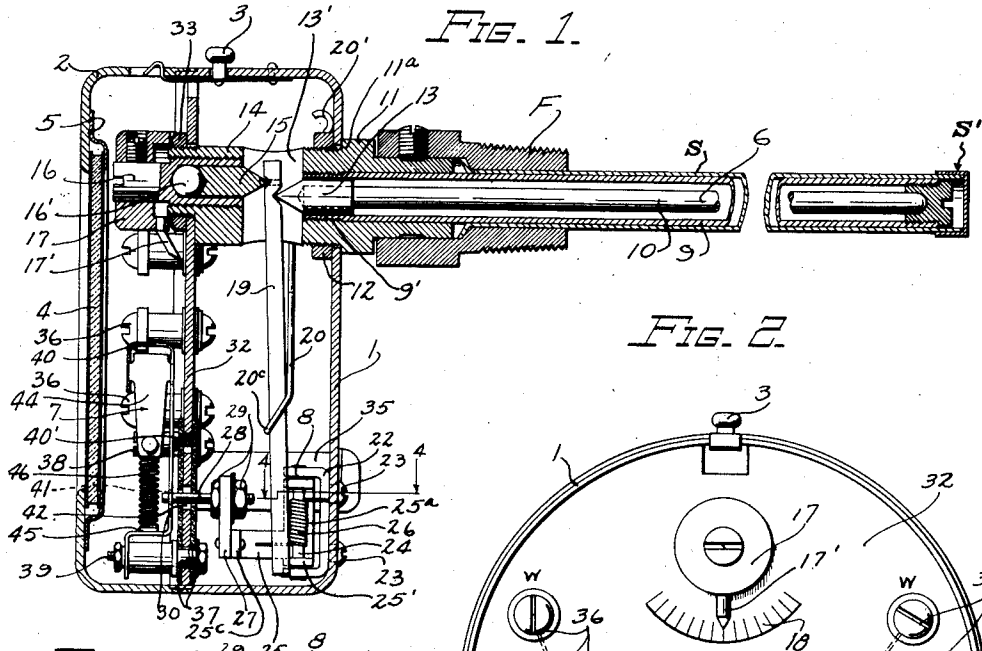

FIG. 2.

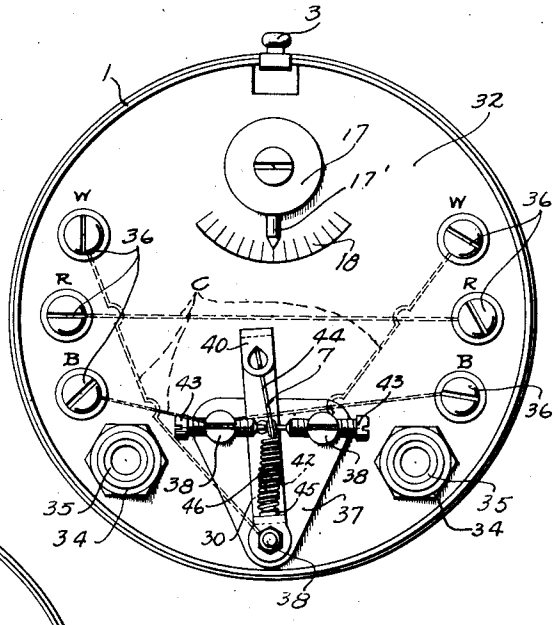

FIG. 4.

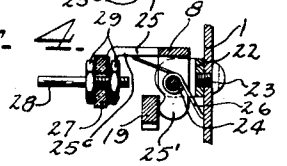

FIG. 3.

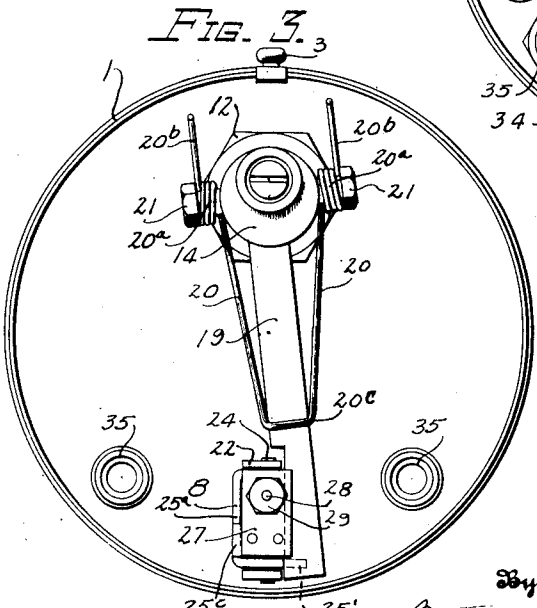

Inventor

Roy W. Johnson

By Bottum, Hudnall, Lecher, McNamara and Mitchell

Attorney

Patented Mar. 21, 1933 1,902,451

UNITED STATES PATENT OFFICE

ROY W. JOHNSON, OF MILWAUKEE, WISCONSIN, ASSIGNOR, BY MESNE ASSIGNMENTS, TO MINNEAPOLIS-HONEYWELL REGULATOR COMPANY, OF MINNEAPOLIS, MINNESOTA, A CORPORATION OF DELAWARE

THERMOSTATIC SWITCH FOR USE WITH HEATERS

Application filed April 19, 1929. Serial No. 356,580.

This invention relates to automatic control devices for heating systems and more particularly to control units for use in automatic electrically operated systems which regulate the flow of fuel to a burner or burners of a boiler or furnace or which regulate the draft or dampers in coal burning heaters.

One of the principal objects of the present invention is to provide an automatic control device of this character, which is so constructed and organized as to permit of the use of a rod or tube type thermostat for controlling the operation of an electric switch which regulates the action of the automatic control system. Although the type of structure of the electric switch may be varied the present invention contemplates especially a snap action switch which may be of extremely simple and durable construction. Further, the organization is such as to permit of convenient variation of the point or temperature at which the thermostat is effective to cause operation of the switch.

Other objects and advantages reside in certain novel features of the construction, arrangement and combination of parts, which will be hereinafter more fully described and particularly pointed out in the appended claims, reference being had to the accompanying drawing, forming a part of this specification, and in which:

Figure 1 is a view partly in central, vertical longitudinal section and partly in side elevation showing a thermostatic switch embodying the present invention;

Figure 2 is a view in front elevation of the device of Figure 1 with the cover partly cut away to show the construction of the switch;

Figure 3 is a side view of the device of Figure 1 with the cover switch supporting plate removed; and

Figure 4 is a cross sectional view of the switch actuating mechanism taken on the line 4—4 of Figure 1.

In the drawing, reference numeral 1 indicates a cup-shaped supporting base with which a flanged cover 2 is interfitted, the cover being releasably secured in position on the base by a spring latch 3. The supporting base and cover constitute means for housing a thermostatic switch and operating mechanism therefor. The cover 3 may have a glass crystal 4 secured thereto by a bezel 5 so that the switch construction may be viewed without removing the cover. A thermostatic element 6 is secured to the housing so as to project therefrom and a switch construction 7 is mounted within the housing to be operated by a mechanical motion transmission train 8 associated with the thermostatic element.

The thermostatic switch 7 comprises a pair of opposed relatively fixed contacts 43 between which a movable switch blade 44 operates. As usual, the contacts 43 are in the form of adjusting screws threaded through binding posts 38 mounted upon but electrically insulated from a partition 32 fixedly supported within the base 1. The binding posts 38 are split adjacent the threaded openings thereof that receive the contacts 43 and have such inherent resiliency as to have binding engagement with these contacts 43 to hold the same in any adjustment. The movable blade 44 is mounted on a contact carrier 40 pivotally supported at its lower end on a stud 39 also secured to but electrically insulated from the partition 32. A pair of insulating plates 37 may be employed for effecting this electric insulation of the posts 38 and stud 39 from the partition 32, the plates 37 being disposed on the opposite sides of the partition 32 and being secured in position by the same nuts, screws or rivet heads or other fastening means provided on the inner ends of the posts 37 and stud 39 for holding these parts in place. The carrier 40 has its upper end of U-shaped formation and provided with opposed pivot bearings which receive laterally projecting trunnions formed on the upper end of the movable contact blade 44. The opposite or lower end of the blade is disposed between the fixed contacts 43 and is biased into engagement with one or the other of these contacts by means of a compression coil spring 46 which has one end bearing upon the contact blade and has its other end engaged with an abutment 45 formed on the carrier adjacent its lower piv-

oted end. The direction in which the spring 46 biases the movable contact blade 44 depends upon the position of the carrier 40 which in turn is shifted under the control of the thermostat as will hereinafter more clearly appear.

The thermostatic element is preferably of the rod or tube type and is shown as comprising an outer cylindrical member 9 which has a high coefficient of expansion and an inner rod or core 10 which has a low coefficient of expansion. The use of copper for the outer cylindrical member and of "invar" for the core has been found to be suitable for this purpose. The outer member 9 may be enclosed in a heat conducting protective sheath S having its outer end capped as at S' and its inner end connected as shown to an attaching fitting F.

The inner end of the tubular member 9 of the thermostatic element is fitted in and threadedly secured as at 9' to a coupling sleeve 11, and as shown in Figure 1 the outer end of this coupling sleeve 9 fits within and is secured to the attaching fitting F. The coupling sleeve 11 extends through an opening provided therefor in the casing 1 and has a shoulder 11*a* abutting the casing around the outside of its opening. A nut 12 is threaded on the sleeve 11 within the casing and engages the inner wall of the casing just opposite the shoulder 11*a* thereby clamping the sleeve to the casing and rigidly securing it in position. The inner end of the rod 10 of the thermostatic element is provided with a knife edge or point 13 which projects into a transverse opening 13' formed in the portion of the sleeve 11 located within the casing 1.

This inner pointed end 13 of the thermostatic element acts upon a lever 19 which has its upper end extending into the transverse opening 13' of the sleeve and which is fulcrumed upon a knife edge or pivot point 15 having an adjustable mounting on the sleeve 14. It is to be noted that the knife edge 13 engages the lever 19 at a point offset from a fulcrum of the lever and consequently, when the thermostat cools down and contracts, the pointed end 13 of the rod 10 swings the lever 19 about its fulcrum 15 in a clockwise direction, as viewed in Figure 1. In order to swing the lever 19 in an opposite direction when the thermostat is heated up and expands, a spring 20 is provided and has coils 20*a* mounted on studs or trunnions 21 threaded into the sleeve 11, ends or terminals 20*b* bearing against a wall of the casing, and an intermediate bight portion 20*c* bearing against the lever. The construction of the spring is such that it tends to bias the lever 19 to swing in a counter-clockwise direction as viewed in Figure 1 and resists opposite swinging movement of the lever under the action of the thermostat.

The position of the lever is varied for the purpose of varying the point at which the thermostat effects operation of the switch and such adjustment of the lever 19 is had by adjusting its mounting or pivot point 15. In carrying out this purpose the pivot point 15 is fitted in the hollowed out end of an adjusting screw 16 which is threaded into an axial opening formed in the sleeve 14. The inner end of the hollow or cavity of the adjusting screw and the adjacent end of the pivot point 15 have recesses of approximately semi-spherical form to adapt them to coact with a ball-bearing 16' interposed between these parts and operating to impart the axial thrust of the screw to the pivot point 15 while permitting the screw to turn without rotating the pivot point 15. The pivot point 15 is fitted in the screw so that these parts may turn freely relative to each other and because of engagement of the transverse knife edge of its pointed end with the lever 19 it remains stationary when the screw 16 is turned. A collar 17 is secured to the outer end of the screw and is provided with a pointer 17' which travels over a dial or scale 18 applied to a partition 32 and made up of graduations and indicia designating the temperature range over which the unit is adapted to operate.

The partition 32 is secured in position on the housing by means of nuts 33 and 34, the nut 33 being threaded on the sleeve 14 and clamping the partition 32 against a shoulder provided on this sleeve 14 and the nuts 34 being threaded upon electric conduit pipes or tubes 35 which are fastened to the base or casing 1 and having shoulders against which the nuts 34 also clamp the partition 32.

The lower end of the thermostatically controlled lever 19 engages an operating arm 25' of a switch operator 25, which acts similar to a bell-crank lever. The switch operator or lever 25 has a U-shaped portion 25*a* on the lower leg of which the arm 25' is integrally formed. The U-shaped portion 25*a* of the switch operator has its legs pivotally supported on a bracket 22 fastened to the base 1 and carrying a vertical pivot pin 24 which passes through apertures in the legs of the U-shaped body portion of the switch operator. An angled arm 25*c* is integral with the U-shaped body portion 25*a* of the switch operator and extends forwardly therefrom. To cause the switch operator 25 to follow the thermostatically controlled lever 19, a coil spring 26 encircles the pivot pin 24 and has one end bearing against the base 1 and its other end bearing against the angled arm 25*c* of the switch operator, the spring being tensioned to urge the operating arm 25' against the lever 19. An insulating plate 27 has its lower end secured to the angled extension 25 and at its upper end carries a switch operating pin 28 which projects for-

wardly through openings 42 in the insulating plates 37 and in the partition 32 and is operatively fitted in an opening 41 formed in the carrier 40. The openings 42 in the partition and in the insulating plates are sufficiently large to permit the pin 28 to have the requisite freedom of movement and the opening 41 is of such size as to afford an operative driving connection between the pin 28 and the carrier 40.

The contacts of the switch are connected up with the binding post 36 mounted on the partition 32 by means of insulated conductors C as shown in Figure 2, and the binding posts are incorporated by the control circuit in any suitable manner.

When the control unit is organized with a boiler or furnace, the thermostatic elements are immersed in the water of the boiler or otherwise exposed and subjected to the temperature of the heating medium at or adjacent the heater.

With the unit mounted on a boiler of furnace and the thermostatic element exposed to the heating medium, when the temperature rises, the tube 9 of the thermostat expands so that the rod 6 moves to the right as viewed in Figure 1 and permits the spring 20 to swing the lever 19 in a counter-clockwise direction, as viewed in Figure 1. This movement of the lever 19 rotates the switch operator 25 in a counter-clockwise direction as viewed in Figure 4, and consequently swings the pin 28 in a counter-clockwise direction as viewed in Figure 4 and to the right as viewed in Figure 2. This movement of the pin will shift the carrier 40 from the position shown in Figure 2 over to the right thereby rocking the blade 44 about the right hand contact 43 as a fulcrum until the angular relation between the spring 46 and the blade 44 is so changed that the spring 46 will cause the blade 44 to snap over into engagement with the left hand contact 43. When the thermostat cools down and contracts the lever 19 and the switch operator 25 are reversely moved to reversely move the contact carrier and reversely operate the switch. The carrier 40 thus also acts as an operating lever for the switch.

It will be seen that the lever 19, the bell crank lever or switch operator 25 and the lever action of the contact carrier 40 are all of the type in which the length of the resistance moment arm is greater than the moment arm of the applied force so that each lever has a mechanical advantage less than unity, but greatly amplifies the amount of movement imparted thereto. This is extremely desirable for while little force is required to move the contact carrier 40, it must be moved through an appreciable distance and the motion transmission means described builds up or multiplies the small motion of the thermostat to the extent necessary to enable it to operate the switch.

The present invention is designed primarily for use with the boiler or furnace control systems shown and described in the copending application of Roy W. Johnson for automatic electric control for gas burners, filed August 27, 1928, Serial No. 302,413 and in the "regulating system for heaters", forming the subject matter of an application of Roy W. Johnson executed under even date herewith, filed April 19, 1929, Serial No. 356,579. It is equally well adapted, however, for use in other systems in which it is desirable to control an electric circuit in accordance with temperatures of a heater.

It is obvious that many changes may be made in the details of the construction and in the arrangement of parts of the embodiment of the invention described above. It is, therefore, to be understood that such changes may be made without departing from the spirit of the invention or the scope of the annexed claims.

The invention claimed is:

1. In combination, a thermostatic element, an electric switch and mechanism for operating the switch in accordance with movement of said thermostatic element, said mechanism including a lever associated with said thermostatic element to be moved thereby, a spring for exerting a bias upon the lever in opposition to the force exerted by the thermostatic element, a second lever associated in operative relation with said switch, and a second spring for biasing said second lever to maintain the same in abutting relation with the movable end of said first mentioned lever and to bias the switch to one position whereby movement of the thermostatic element controls the operation of the switch.

2. A double throw switch mechanism consisting of a base, a pair of oppositely disposed contacts mounted on the base, a fixed pivot on the base, an operating contact carrier mounted on the pivot for rocking movement and having portions on opposite sides of the mean axis of said contacts, a movable blade pivoted to said carrier and engageable with said contacts, and a spring acting on said movable blade for causing snap action of said blade upon movement of the lever, and means coacting with an intermediate portion of said carrier to rock the same and thereby operate the switch.

3. A double throw switch mechanism consisting of a base, a pair of oppositely disposed contacts mounted on the base, a pivot fixed to said base, an operating contact carrier mounted on the pivot and having a bearing at its movable end, a movable contact blade mounted in said bearing, a spring engaging one end of said blade for causing it to move with a snap action, and operat-

ing mechanism for the switch coacting with the portion of said carrier adjacent its pivot.

4. A switch of the character described comprising a base, a pair of oppositely disposed fixed contacts mounted on the base, a contact carrier having one end mounted on base for rocking movement, means for limiting the rocking movement of the contact carrier in either direction, a movable contact blade pivoted to the free end of the carrier and engageable with said fixed contacts, said carrier having an abutment adjacent its pivoted end, a spring interposed between the abutment and the blade biasing the blade to engage one or the other of the fixed contacts depending upon the position of the carrier and an operating mechanism for the switch including an operating element operatively connected to the portion of the carrier adjacent its pivot.

5. A thermostatic switch of the character described comprising a base, a pair of opposed and relatively fixed contacts mounted on the base, a carrier pivoted to the base, a contact blade mounted on the carrier and engageable with said fixed contacts, a spring mounted on the carrier and engaging the blade and acting to bias the blade to engage one or the other of the fixed contacts depending upon the position of the carrier, a rod or tube type thermostat, a lever having a long and short arm, the short arm being acted upon by the thermostat, a second lever also having a long and a short arm, the short arm of the second lever being engaged by the long arm of the first lever and an operating pin carried by the long arm of the second lever and engaged with the portion of the contact carrier adjacent its pivot whereby a small movement of the thermostat will effect an operative movement of the switch.

6. A thermostatic control unit for use with heaters or the like and comprising a casing, an adjustable fulcrum therein, a lever rockable on said fulcrum, a thermostat projecting from the casing and having an element extending into the casing and bearing upon the lever at a point offset from its fulcrum, whereby to positively move the lever in one direction, a spring coacting with the lever to cause it to follow the movement of said element in an opposite direction, a second lever actuated from said first-mentioned lever and carrying a switch operating pin, and a snap action switch including a pivoted carrier interconnected with the operating pin and shifted thereby, a contact blade pivoted to the carrier, a pair of opposed contacts with which the blade is selectively engageable, and a spring biasing the blade to engage one or the other of the fixed contacts depending upon the position of said carrier.

7. A thermostatic control unit for use with heaters and comprising a casing, a sleeve secured to said casing and having a portion within the casing and a portion projecting beyond the same, said sleeve having a transverse opening in the portion within the casing intersecting its longitudinal opening, a lever having an end extending into said transverse opening, an adjustable fulcrum for the lever mounted in the longitudinal opening of the sleeve at one end thereof, a thermostat connected to the other end of the sleeve and having an operating element bearing on said lever a point offset from its fulcrum, and a switch within the casing operated from said lever.

In witness whereof, I hereto affix my signature.

ROY W. JOHNSON.