G. A. JOHNSON.

DRAFT RIGGING FOR RAILWAY CARS.

APPLICATION FILED MAY 22, 1913. RENEWED JUNE 12, 1914.

1,125,109. Patented Jan. 19, 1915.

2 SHEETS—SHEET 1.

FIG. 1.

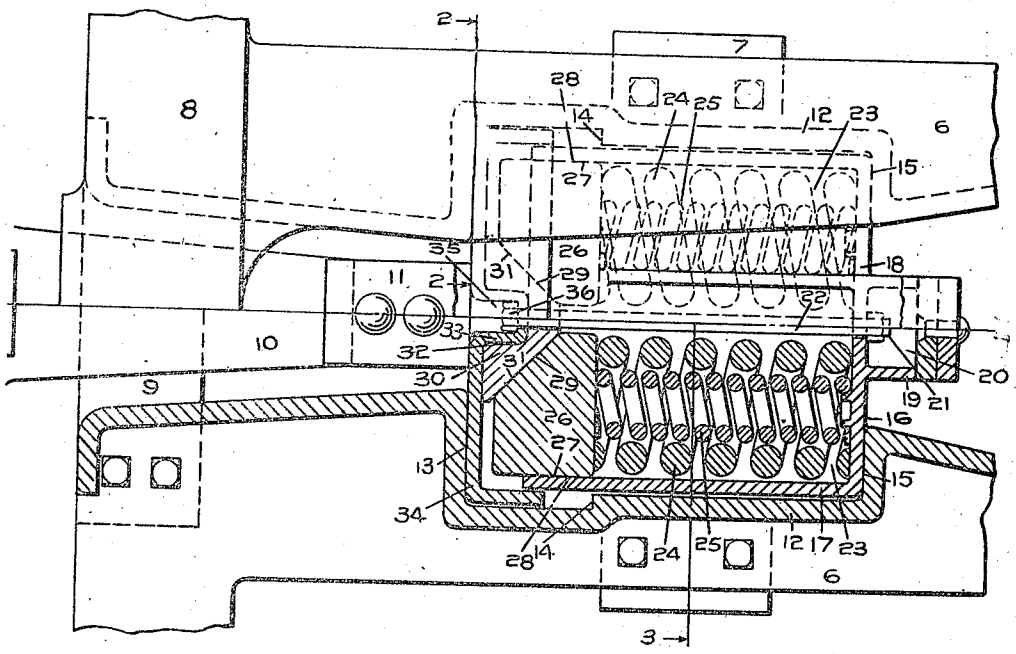

FIG. 2.

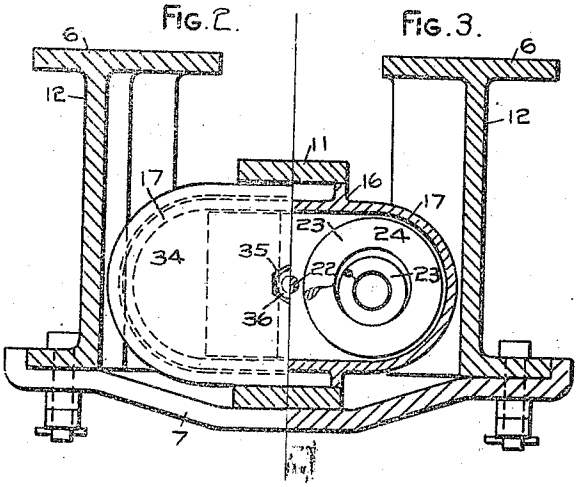

FIG. 3.

WITNESSES:

Hans M. Prachlitz

Eleanor L. Nash

INVENTOR.

George A. Johnson.

BY George F. Haight

HIS ATTORNEY.

G. A. JOHNSON.

DRAFT RIGGING FOR RAILWAY CARS.

APPLICATION FILED MAY 22, 1913. RENEWED JUNE 12, 1914.

1,125,109.

Patented Jan. 19, 1915.

2 SHEETS—SHEET 2.

FIG. 4.

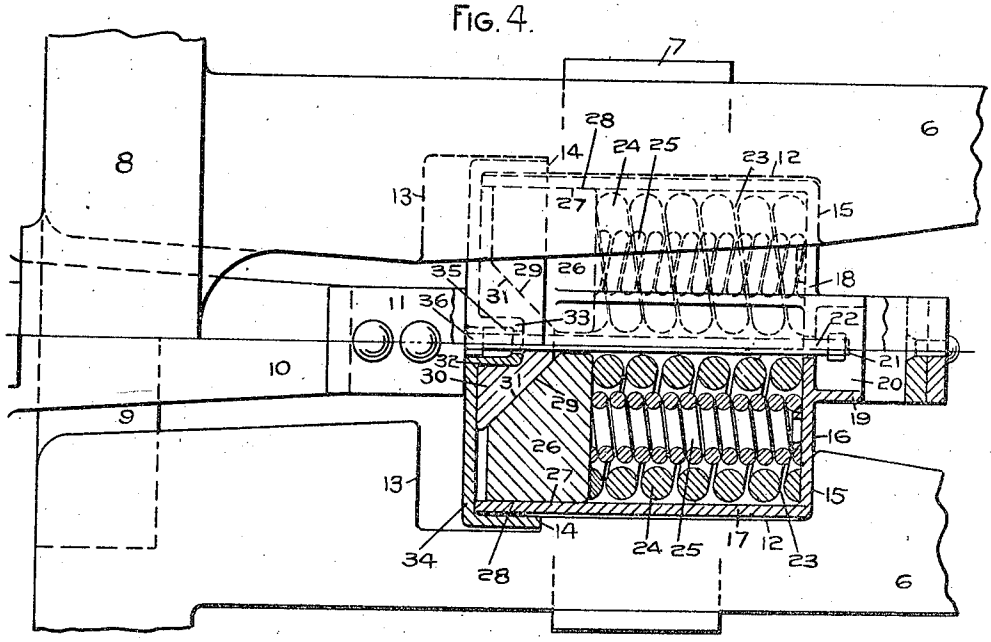

FIG. 5.

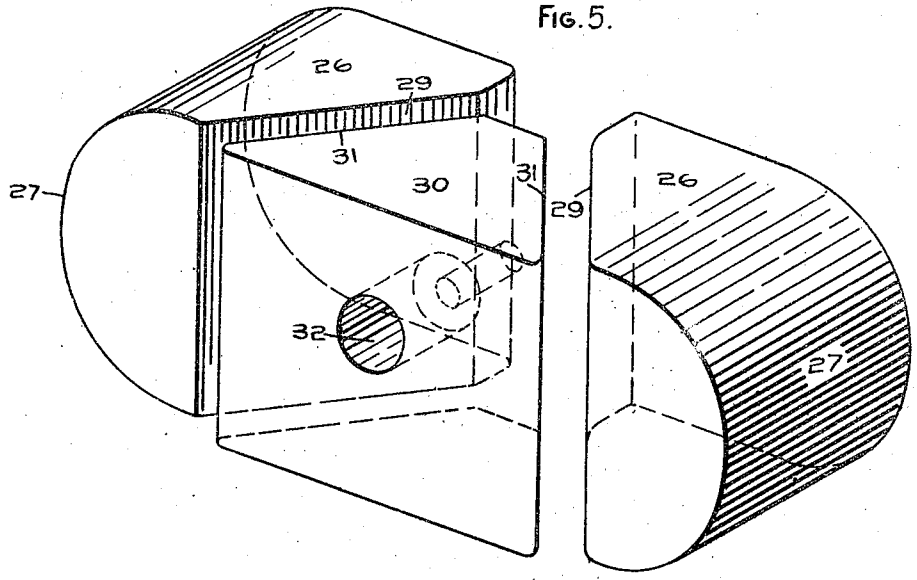

WITNESSES:

Hans M. Bachlitz

Eleanor L. Nash

INVENTOR.

George A. Johnson

BY George F. Haight

HIS ATTORNEY.

UNITED STATES PATENT OFFICE.

GEORGE A. JOHNSON, OF CHICAGO, ILLINOIS, ASSIGNOR TO WILLIAM H. MINER, OF CHICAGO, ILLINOIS.

DRAFT-RIGGING FOR RAILWAY-CARS.

1,125,109. Specification of Letters Patent. Patented Jan. 19, 1915.

Application filed May 22, 1913, Serial No. 769,138. Renewed June 12, 1914. Serial No. 844,819.

To all whom it may concern:

Be it known that I, GEORGE A. JOHNSON, a citizen of the United States, residing at Chicago, in the county of Cook and State of Illinois, have invented a certain new and useful Improvement in Draft-Rigging for Railway-Cars, of which the following is a full, clear, concise, and exact description, reference being had to the accompanying drawings, forming a part of this specification.

My invention relates to improvements in draft rigging for railway cars.

The object of my invention is to provide a draft rigging of high cushioning capacity and of cheap and simple construction.

In the drawings forming a part of this specification Figure 1 is a plan view partly in horizontal section of a draft rigging embodying my invention. Fig. 2 is a half cross sectional view on line 2—2 of Fig. 1. Fig. 3 is a half cross sectional view on line 3—3 of Fig. 1. Fig. 4 is a plan view partly in horizontal section showing the position of parts when under full compression in buffing movement. Fig. 5 is an enlarged detail illustrating the wedge and friction blocks.

Referring to the drawings 6, 6 represent draft members or parts of the car frame to which the draft rigging is applied, 7 a tie plate suitably secured thereto, 8 the end sill, 9 the draw bar carry iron, 10 the draw bar, 11 the draft yoke secured thereto, 12, 12 the stop members, which are preferably integral with the draft members, the said stop members being provided with front stop shoulders 13, 13, limiting stop shoulders 14, 14 and rear stop shoulders 15, 15.

16 represents the draft gear comprising a hollow shell 17 open at its forward end and closed at its rear end by the preferably integral plate 18, the shell being preferably provided with a rearwardly extended hollow boss 19 adapted to engage the inner rear end of the draft yoke, and having a recess 20 therein within which the rear end 21 of the connecting rod 22 operates in the movements of the draft gear.

The shell is preferably elliptical in cross section, and contains two sets of main springs 23, 23, each set comprising preferably an outer spring 24 and an inner spring 25, the said main springs being in parallel twin arrangement, and each set being rearwardly seated against the inner rear face of the shell, and each forwardly seated against the rear face of a friction block 26. There are preferably two friction blocks, each having a curved outer friction face 27 adapted to engage with the internal friction face 28 of the shell, and each having an oblique inner wedging face 29, the said friction blocks having between them a wedge 30 having the lateral wedging faces 31, 31, each wedging face 31 engaging a wedging face 29 of one of the friction blocks 26.

The wedge 30 is provided with a forwardly opening recess 32, which is adapted to receive the rearwardly extended boss 33 of the cap 34, the said boss having a forwardly opening recess 35 to receive the head 36 of the connecting rod 22, which passes through said boss and the wedge, and is provided at its rear end 21 with a suitable nut threaded thereon.

The cap 34 comprises a plate having the rearwardly extended boss hereinbefore described, and a rearwardly extended flange at its periphery which is adapted to inclose the forward end of the shell 17. By the employment of a set of main springs for each friction block I am enabled to secure a strong and direct resistance to the inward travel of each block within the shell. On rearward movement of the draw bar the cap 34 is forced rearwardly, actuating the wedge to spread the friction blocks, the inward travel of each friction block being separately and directly resisted by a set of main springs. Upon full compression of the draft gear in buffing movement the parts are in the position illustrated by Fig. 4 of the drawings, the flange of the cap 34 engaging the limiting stop shoulder 14, thus limiting the compression of the gear in rearward travel of the draw bar. On forward movement of the draw bar the cap 34 engages the front stop shoulders 13, 13, the yoke serving to draw the shell forwardly and compressing the friction mechanism and spring members therein until the forward end of the shell engages the cap 34, thus limiting the further compression of the parts in forward travel of the draw bar.

I claim:—

1. In a draft rigging for railway cars, in combination, stop members, draw bar, a

draft yoke, a shell, friction mechanism and springs within the shell, a cap engaging the friction mechanism, the said cap being provided with a rearwardly extended flange, the stop members being provided with limiting stop shoulders with which said flange is adapted to engage to limit the compression of the parts within the shell.

2. In a draft rigging for railway cars, in combination, stop members, a draw bar, a draft yoke, a shell, friction mechanism and spring mechanism within the shell, a cap engaging the friction mechanism, the said cap having a rearwardly extended flange inclosing the forward end of the shell, the stop members being provided with front and limiting stop shoulders, the said cap engaging the front stop shoulders on forward movement of the draw bar, and the flanges thereof engaging the limiting stop shoulders on rearward movement of the draw bar to limit the compression of the parts within the shell.

GEORGE A. JOHNSON.

Witnesses:
ELEANOR L. NASH,
JOHN A. MARTINKUS.