June 3, 1941. R. W. HAUTZENROEDER 2,243,861

APPARATUS FOR SUPPLYING FUEL TO INTERNAL COMBUSTION ENGINES

Filed May 12, 1938 4 Sheets-Sheet 1

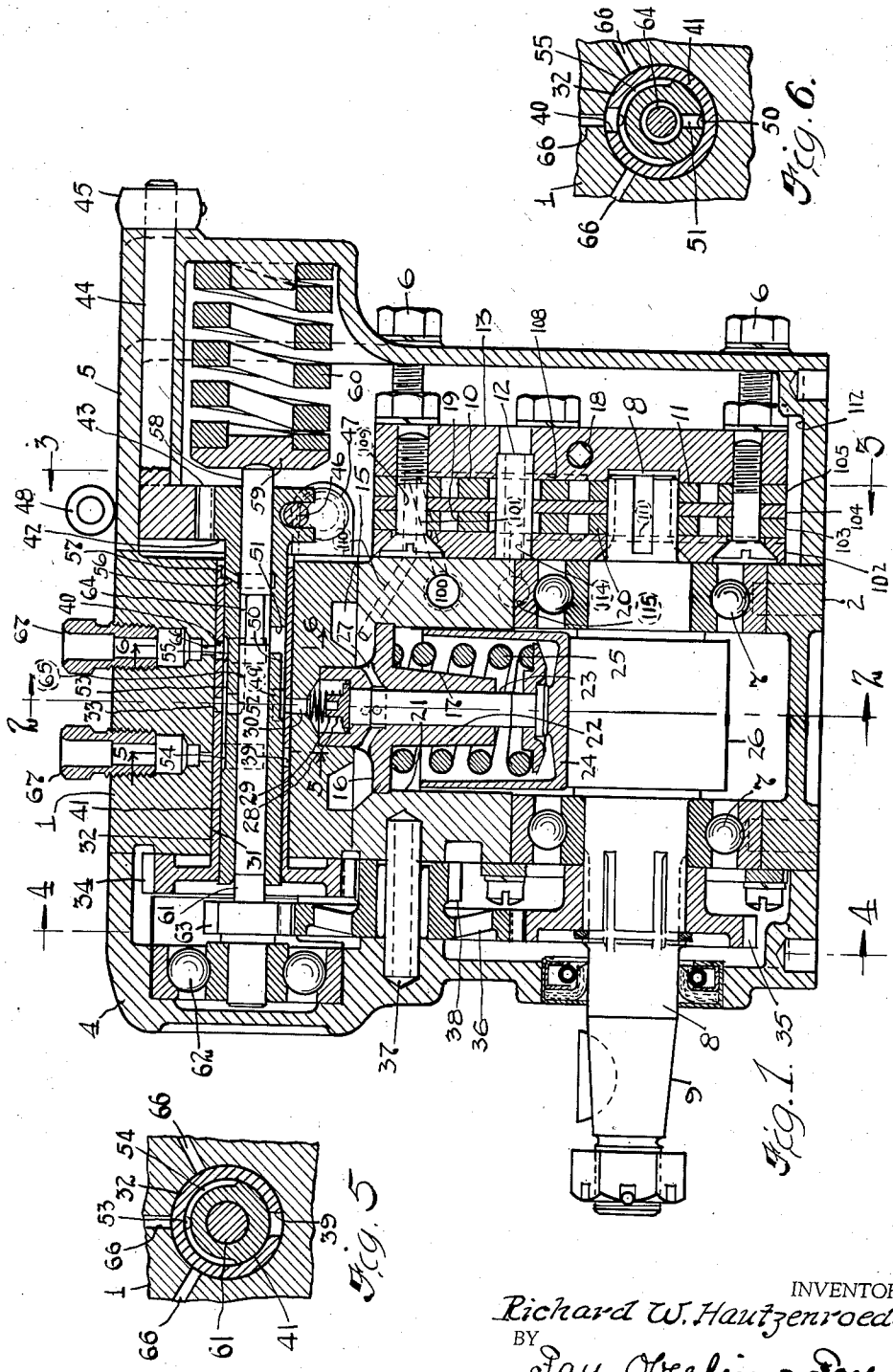

Fig. 1.

Fig. 6.

Fig. 5

INVENTOR.
Richard W. Hautzenroeder
BY
Fay, Oberlin & Fay
ATTORNEYS.

June 3, 1941. R. W. HAUTZENROEDER 2,243,861

APPARATUS FOR SUPPLYING FUEL TO INTERNAL COMBUSTION ENGINES

Filed May 12, 1938 4 Sheets-Sheet 2

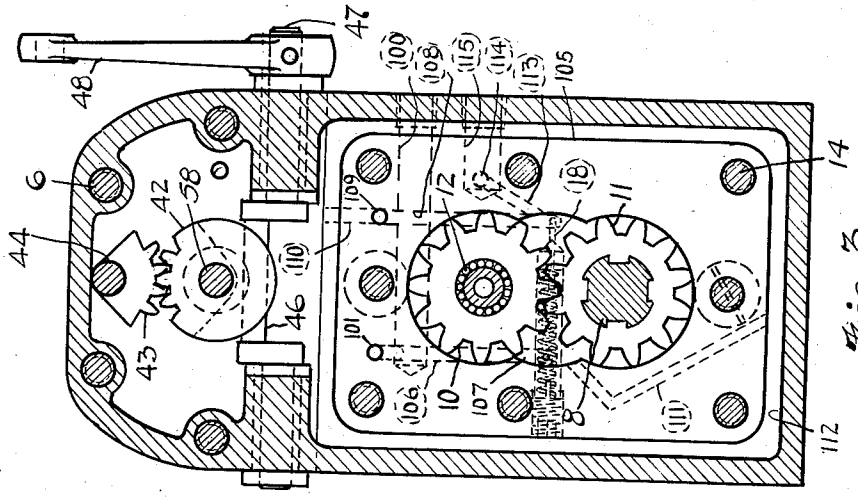

Fig. 3

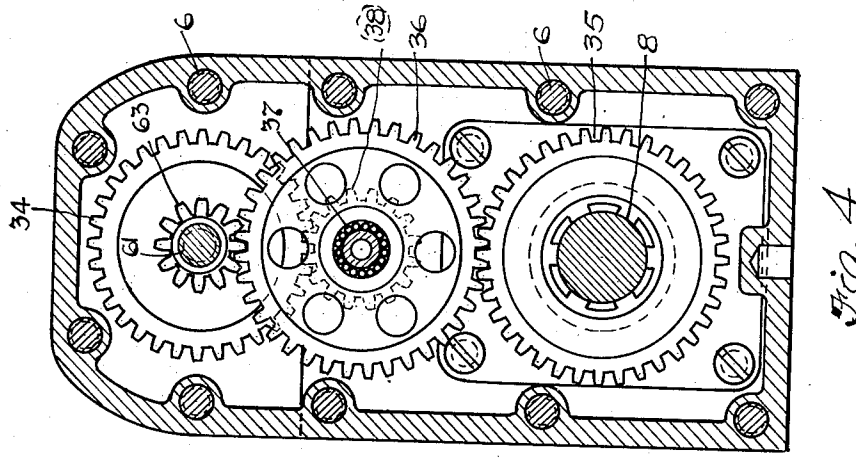

Fig. 4

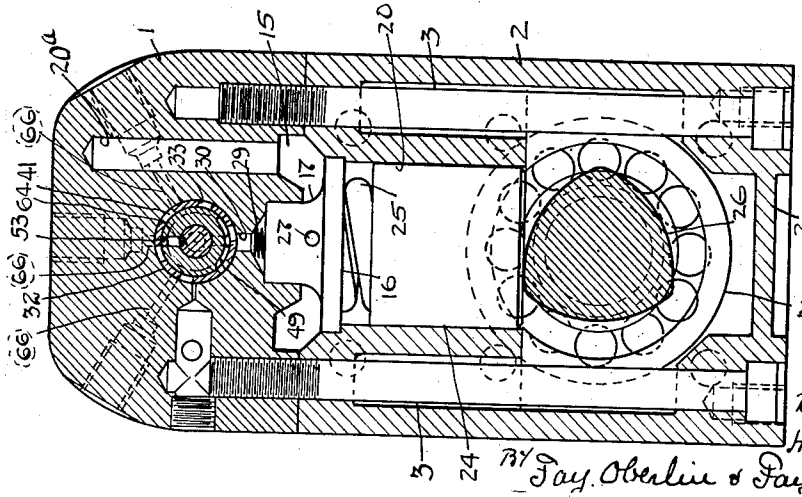

Fig 2

INVENTOR.
Richard W. Hautzenroeder.

BY Fay, Oberlin & Fay ATTORNEYS.

June 3, 1941. R. W. HAUTZENROEDER 2,243,861

APPARATUS FOR SUPPLYING FUEL TO INTERNAL COMBUSTION ENGINES

Filed May 12, 1938 4 Sheets-Sheet 3

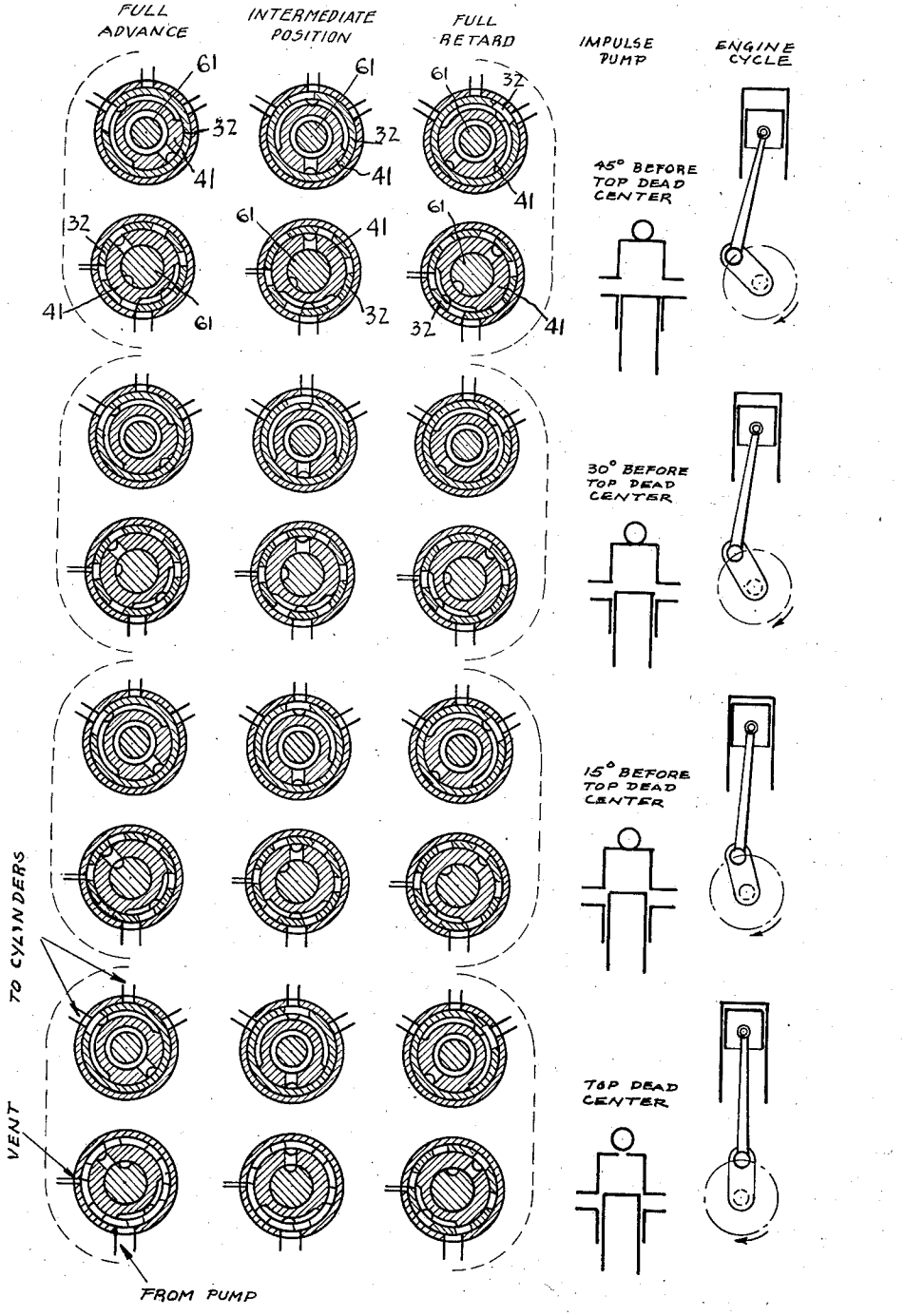

Fig. 7

INVENTOR.
Richard W. Hautzenroeder
BY
Fay, Oberlin & Fay
ATTORNEYS.

June 3, 1941. R. W. HAUTZENROEDER 2,243,861

APPARATUS FOR SUPPLYING FUEL TO INTERNAL COMBUSTION ENGINES

Filed May 12, 1938 4 Sheets-Sheet 4

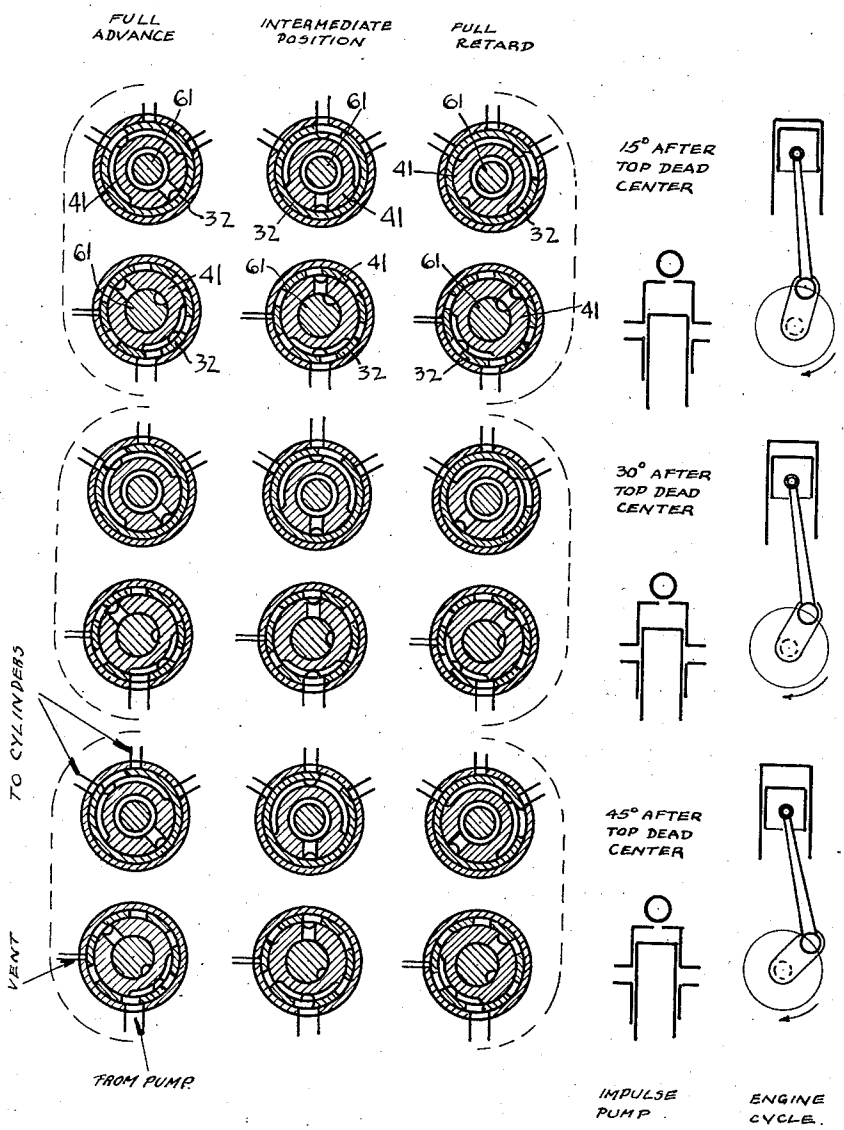

Fig. 7a.

INVENTOR.
Richard W. Hautzenroeder
BY
Fay, Oberlin & Fay
ATTORNEYS.

Patented June 3, 1941 2,243,861

UNITED STATES PATENT OFFICE

2,243,861

APPARATUS FOR SUPPLYING FUEL TO INTERNAL COMBUSTION ENGINES

Richard W. Hautzenroeder, Mansfield, Ohio

Application May 12, 1938, Serial No. 207,490

6 Claims. (Cl. 123—139)

This invention relates, as indicated, to apparatus for supplying fuel to internal combustion engines, but has reference more particularly to improvements in the unitary pump and distributor disclosed in Figs. 6 to 12 of my Patent No. 2,101,064, granted December 7, 1937.

In the present modification of the unitary pump and distributor, the various parts have been so redesigned and relocated as to obtain (1) a shorter and more direct connection between the pump and the distributor and (2) a continuously ascending flow of fuel to avoid difficulties resulting from the formation of expansible gas bubbles.

The present structure, moreover, embodies an additional element, i. e., a distributor valve, which performs a part of the function of the sleeve 33*a* in the patented form of the unit. By the use of such an additional element, (1) the spindle which corresponds with the spindle 51*a* in the patented construction is permitted to make one complete revolution for each impulse of the pump, so that wider openings in the sleeve, corresponding to the openings 57*a* in the patented construction, and a wider groove, corresponding to the groove 56*a* in the patented construction, may be employed, thereby reducing the fluid friction, and "wire drawing," and also reducing errors resulting from inaccuracies in workmanship; (2) greater variations in timing may be obtained without "overlapping" into the wrong discharge duct, and (3) more effective sealing between the several discharge ducts is provided.

To the accomplishment of the foregoing and related ends, said invention, then, consists of the means hereinafter fully described and particularly pointed out in the claims.

The annexed drawings and the following description set forth in detail certain mechanism embodying the invention, such disclosed means constituting, however, but one of various mechanical forms in which the principle of the invention may be used.

In said annexed drawings:

Fig. 1 is a sectional view of a pump and distributor unit embodying the novel features of the invention; Figs. 2, 3, 4, 5 and 6 are transverse cross-sectional views of the unit, taken on the lines 2—2, 3—3, 4—4, 5—5 and 6—6 respectively of Fig. 1; and Figs. 7 and 7*a* are views illustrating the positions of various parts in the cycle of operations.

Referring more particularly to the drawings, the unit comprises a housing consisting of a central portion formed of upper and lower sections 1 and 2 respectively, secured together by means of bolts 3, and end portions 4 and 5, secured to the central portion by means of bolts 6.

Journaled in bearings 7 mounted to the housing section 2 is a shaft 8, the terminal 9 of which may have a suitable gear keyed thereto and which gear is driven directly from the crank or cam shaft of the engine, so that the pump and distributor to be now described are driven synchronously with the rotation of the crankshaft and the reciprocation of the pistons in the cylinders.

Liquid fuel is supplied to the unit by means of a booster pump of the gear type which consists of gears 10 and 11, the latter being preferably keyed directly on the shaft 8, and the former being mounted for rotation about an axle 12 mounted in pump cover 13 which is secured to the housing section 2 by means of bolts 14. The fuel from a suitable source of supply, such as the tank 1 shown in my aforesaid patent, is forced by the booster pump into the annular space 15 above the flange 16 of an impulse pump cylinder 17, the manner in which the fuel is thus conveyed, being as follows: The fuel enters the passageway 100 in the central housing section 2, passing thence through aligned openings 101 in the section 2, service pump back plate 102, pump body plate 103, pump center plate 104 and pump body plate 105, to (but not through) pump cover plate 13, thence vertically downward through a groove 106 in the inner surface of the plate 13, and into the space 107 at the intake side of the service pump (gears 10 and 11). The fuel is carried by these gears to the discharge side of the pump, being discharged into a vertical groove 108 in the inner surface of the plate 13 at the right hand side thereof (Fig. 3), thence through aligned openings 109, in the members 105, 104 and 103 and 102, and into the space 15 through an inclined opening 110 in the section 2. A relief valve 18 is "shunted" across the inlet and discharge grooves 106 and 108 in the plate 13, so as to "feed back" any excess pressure from the discharge side to the inlet side of the service pump.

A scavenger pump is also provided, similar to the booster or service pump, and consisting of meshed gears 19 and 20, respectively mounted in the same manner as gears 10 and 11. A crooked groove, which is milled in the outer surface of the plate 102, connects the suction side of the scavenger pump with the sump 112. A shorter groove 113 on the right hand side (Fig. 3) of plate 102 conveys the fuel from the discharge

side of the scavenger pump into aligned apertures 114 in the plate 102 and section 2, thence into the passageway 115 to be carried back to the source of fuel supply.

A recess 20a in the housing section 1 provides a surge chamber for the fuel during the operation of the pump.

The housing section 2 has an opening 21 therein which is closed at the bottom, and the upper end of this opening is counterbored to support the flange 16 of the impulse pump cylinder 17. The cylinder 17 has a bore 22 extending axially and longitudinally therethrough in which is slidably mounted a plunger 23 having a cup-like tappet 24 secured to its lower end. Mounted in this tappet, coaxially with the plunger 23 is a compression spring 25, which maintains the tappet 24 in contact with a cam 26 which is formed as an integral part of the shaft 8. This cam, it will be noted, has three lobes, the number of lobes depending, of course, upon the number of cylinders which are to be served.

The cylinder 17 has a number of circumferentially spaced inclined passages 27, through which the fuel passes from the space 15. The lower ends of these passages are just above the upper end of the plunger 23 when such plunger has moved to its lowermost position. The bore 22 of the cylinder is counterbored at its upper end to provide a seat for a valve 28, which is resiliently maintained on its seat by means of a compression spring 29 which is interposed between the valve and the housing section 1. Directly above the spring 29 is a port 30 through which the fuel discharged by the impulse pump flows to the distributor to be now described.

The housing section 1 has a cylindrical bore 31 extending horizontally therethrough, this bore being disposed above and at right angles to the opening 21 in the housing section 2. Disposed within this bore and coaxial therewith is a rotatable cylindrical distributor valve 32 having a plurality of uniformly circumferentially spaced apertures 33 which are successively registrable with the port 30. The valve 32 is also provided at one end with a gear 34, the valve being continuously rotated by the shaft 8 through the intermediary of a gear 35 keyed to the shaft 8, a transfer gear 36, revoluble about an axle 37, mounted in housing sections 2 and 4, and a small gear 38 formed integrally with the gear 37. The valve 32 is also provided with apertures 39 and 40 which are spaced longitudinally from each other and from the apertures 33, and which serve a purpose to be presently described. These apertures, it will be noted, are also spaced 180° from each other.

Closely fitted within the valve 32 and coaxial therewith is a cylindrical sleeve 41 forming a timing valve. This sleeve is provided at one end with a gear 42 which is in mesh with a sector gear 43 extending from one end of a rock shaft 44 mounted in the end portion 5 of the housing. The shaft 44 may be rocked by means of a lever 45 secured to its opposite end, and in this way, the sleeve may be rotated within limits so as to regulate the time of injection with respect to the position of the pistons within the cylinders.

The gear 42 is slotted in its lower portion to receive the crank pin 46 of a crank 47 which is journalled in the end portion 5 of the housing. The crank 47 has secured to one end thereof a lever 48, whereby the crank may be rocked to move the sleeve 41 axially within limits for a purpose to be presently described.

The sleeve 41 has a recess 49 in its outer surface which extends circumferentially thereof for a considerable distance, as clearly shown in Fig. 2, the center of this recess being in alignment with the port 30 in housing section 1. A longitudinally extending groove or recess 50 in the outer surface of the sleeve extends from the central portion of the recess 49 to a passage 51 extending radially through the sleeve. At a point diametrically opposite the port 30, the sleeve 41 has a passage 52 extending radially therethrough, this passage, by means of a longitudinally extending groove or recess 53, communicating with recesses 54 and 55 extending circumferentially of the sleeve, as shown in Figs. 5 and 6. The recesses 54 and 55 are similar to the recess 49, but are considerably longer than the latter and are spaced apart longitudinally of the sleeve to an extent such that the apertures 39 and 40 in the valve 32 are respectively communicable with such recesses as the valve rotates.

The sleeve 41 also has an inclined aperture 56 formed in the wall thereof, which aperture is in communication with a groove 57 formed in the peripheral surface of the sleeve so that fuel passing out of the sleeve, through the aperture 56, may pass through such groove for a purpose hereinafter more fully explained.

The sleeve 41 has movably mounted therein an injector plunger 58 which forms a substantially fluid-tight fit with the inner wall of the sleeve and which extends outwardly out of such sleeve and is engaged by a cap 59. The cap 59 is engaged by a compression spring 60 which is axially restrained by the inner wall of the housing portion 5. Any fuel which seeps into the space occupied by this spring finds its way to the lower part of the housing portion 5, whence it is returned to the fuel supply tank by means of the scavenger pump previously described.

Projecting into the sleeve 41 and forming a fluid-tight fit therewith, is a rotatable shaft or spindle 61, constituting an interrupter valve, this spindle being journalled at one end in a bearing 62 mounted in housing portion 4. A portion of the spindle 61 intermediate the bearing 62 and the gear 34 is formed as a gear 63 which is in mesh with the gear 36, so that the spindle is driven synchronously with the crank-shaft of the engine and with the distributor valve 32. The spindle 61 is provided at its inner end with a reduced extension 64 which abuts and maintains the plunger 58 against displacement when the latter is not moved outwardly against the action of the spring 60 by means of fluid under pressure.

The spindle 61 has formed in its periphery a longitudinally extending groove 65 which establishes communication between the passage 52 in the sleeve 41 and the annular space between the extension 64 of the spindle and the inner wall of said sleeve.

Leading from the bore 31 of housing section 1 are spaced groups of radially extending passages 66 through which the fuel is carried by means of suitable conduits (not shown) to spray valves, which may be of the type shown in my Patent No. 2,101,064. These passages correspond in number to the number of cylinders of the engine to which the unit is applied. The present unit has been designed for a six-cylinder, four-stroke cycle engine, and there are accordingly two groups of three each of such passages, the groups being accessible by the ports 39 and 40 respective-

ly of the distributor valve. Unions 67 are employed to connect housing with the conduits which lead to the spray valves.

It will be noted that, upon rotation of the shaft 61, when the groove 65 is brought into alignment with the passage 52, the fuel from the interior of the sleeve 41 is permitted to flow therefrom through the groove 53 and recesses 54 and 55 into the passages 66, at such times that such flow is permitted by the valve 32.

The operation of the fuel pump and distributor unit may now be briefly described as follows. Upon rotation of the cam 26, a reciprocating movement is imparted to the plunger 23 of the fuel pump, and as the spring 25 moves such plunger downwardly from the position shown in Fig. 1, the valve 28 will seal the upper end of the bore 22. After the plunger 23 has moved downwardly for a distance sufficient to uncover the passages 27, fuel will be forced by the booster gear pump 10, 11 into the space in the bore 22 between the upper end of the plunger and the valve 28. In order that the pump may be efficiently operated during the rushes of fuel from the supply tank to the pump, the storage or surge chamber 20*a* is provided, which insures operation of the pump at full capacity. When the plunger 23 is moved upwardly at the beginning of the next stroke, the passages 27 are sealed by the plunger and the fuel which is therefore entrapped in the bore 22 is forced upwardly, unseating the valve 28 and passing into the port 30.

The fuel under pressure leaves the port 30, passes through one of the apertures 33 in valve 32, and enters the annular space between the reduced extension 64 of the spindle 61 and the inner wall of the sleeve 41 by way of the recess 49, groove 50 and passage 51. The fuel pressure will then cause the plunger 58 to be moved outwardly against the action of the spring 60 until the inner end of the plunger uncovers the aperture 56 to an extent such that equilibrium is established whereby the proper operating pressure is maintained on the interior of the sleeve 41. The shaft 61 which rotates synchronously with the crankshaft of the engine, carries the groove 65 into communication with the passage 52 upon each revolution of the shaft 61 so as to permit a measured quantity of fuel to pass from the interior of the sleeve 41 to the passages 52 and thence through groove 53, recesses 54 and 55, apertures 39 and 40, and passages 66 to the various spray valves. The passage of fuel to the passages 66 is permitted at only such times that the apertures 39 and 40 come into registration with such passages during rotation of the valve 32. The apertures 39 and 40 are so arranged as to deliver the fuel to the various passages 66 in a predetermined sequence, as is customary in the operation of internal combustion engines.

By axially moving the sleeve 41, the relative position of the relief aperture 56 may be adjusted with respect to the valve 32 so that the fuel pressure required to move the plunger 58 so as to permit the escape of a portion of such fuel is varied, thereby regulating the working pressure of the fuel on the interior of the sleeve 41. This axial movement of the sleeve may be effected by manual or automatic control of the adjusting lever 48. By rotating the sleeve 41 about its axis, the instant at which communication is established between the fuel in the interior of the sleeve 41 and the passages 66 may be regulated so as to effect what is commonly termed a retarded or advanced injection. This rotation of the sleeve 41 to effect such retarded or advanced injection is effected by the control lever 45 which may be actuated either manually or by a suitable form of governor operated from the engine. The above adjustments, it will be noted, are effective to produce the proper operating conditions irrespective of the pressure built up by the booster gear pump since the excess pressure or surplus of fuel supply is relieved and discharged back to the supply tank. The entire range of adjustments, necessary and expedient to the proper operation of the fuel supply system for all conditions of operation to the engines to which the system is applied, is effected by the single sleeve 41, which adjustments can be made independently of any excess pressures or excess fuel delivered or supplied by the booster gear pump.

By arranging the valve 32, sleeve 41 and spindle 61 directly above the impulse pump, and horizontally instead of vertically, as shown in my aforesaid patent, a shorter and more direct connection between the pump and the distributor of the unit is obtained. Moreover, a continuously ascending flow of fuel is obtained, thereby avoiding difficulties resulting from the formation of expansible gas bubbles.

By employing an additional element in the distributor, to wit, the distributor valve 32, a number of advantages are secured over the unit disclosed in Figs. 6 to 12 of the aforesaid patent. In the first place, this permits the spindle 61 to make one complete revolution for each impulse of the distributor pump instead of one-sixth of a revolution for each impulse, as in the patented construction, thereby permitting the use of widder openings in the sleeve 41 and a wider groove in the spindle 61. As a result, fluid friction and "wire drawing" is reduced to a minimum. Moreover, errors resulting from inaccuracies in workmanship are also reduced, due to the fact that the formation of the extremely narrow, tapered grooves 56*a* of the patented construction is rendered unnecessary.

In the second place, greater variations in timing may be obtained without danger of causing "overlapping" into the wrong discharge duct. In the third place, more effective sealing between the several discharge ducts is provided.

Figs. 7 and 7*a* are views which illustrate more or less diagrammatically the positions of the valve 32, sleeve 41 and spindle 61, and the impulse pump, at various points in the engine cycle. Fig. 7*a* is, in reality, a continuation of Fig. 7. In these views, the position of the piston of the engine at various points in the cycle are illustrated at the extreme right of each figure, and the position of the impulse pump immediately to the left of the piston positions. For each piston position, a group of six illustrations appear, the illustrations in each group being bracketed by the dotted lines, as indicated. In each group, the lower row of three illustrations shows sections corresponding to section line 2—2 of Fig. 1, while the upper row of three illustrations shows sections corresponding to the section line 6—6 of Fig. 1.

By referring to these operating diagrams and the following description, the operation will be readily understood.

Assuming that the timing valve 41 is in the full retard position, the action can be traced as follows:

At 45° before the top dead center of the piston and cylinder about to be fired, it will be noted

that the opening in the distributor valve **32** has just established communication with the proper spray nozzle; the groove in the interrupter valve **61** is almost diametrically opposite of the timing slot in the timing valve thus sealing the interior of the timing valve **41** from the spray valve; the impulse pump plunger is approximately at the bottom of its stroke with the suction ports fully uncovered, the discharge valve sealing the pump against any residual pressure in the interior (a term I shall hereafter use to denote that space between the interrupter valve and injection plunger and any passages constantly in communication therewith); the distributor valve has also closed the passage between the "interior" and the impulse pump but has uncovered the vent, thus permitting the injection plunger to discharge any residual fuel.

The engine has now turned through 15° of crankshaft travel, bringing the piston 30° before top dead center; the impulse pump plunger has started its upward stroke and is gathering velocity although the suction ports are still uncovered permitting the pump to complete its filling or, if filled, permitting the excess to escape back into the surge chamber; communication is still established from the timing slot to the spray nozzle and from the interior to the vent although closed from the pump to the interior, the distributor having moved only one-half of 15° or 7½°. The interrupter valve, moving at three times engine speed has moved 45° closer to the timing slot.

Another 15° of crankshaft travel, the piston is now 15° before top dead center. Timing slot to spray valve still open, interior to vent still open but beginning to close, impulse pump to interior just beginning to open, pump plunger beginning to close suction ports.

Another 15° of crankshaft travel, the piston is at top dead center, the passage from timing slot to spray nozzle is open, the passage from the impulse pump to the interior is open, the vent is sealed by the distributor valve, the pump plunger has just sealed the suction ports and interrupter valve is just beginning to open.

Another 15° of crankshaft travel, the piston has started down on the power stroke, the vent is sealed, suction ports covered, the pump has been injecting fuel into the interior at an accelerating rate, the fuel maintaining a balance between the resistance of the spray nozzle to increasing rates of flow and the reactance of the injector plunger spring, compressing the latter and causing the fuel to be sprayed from the nozzle at an accelerated rate approximating half of the rate of delivery from the pump.

Combustion in the cylinder is at constant pressure or as near thereto as is possible in actual practice.

Another 15° of crankshaft travel, the piston is now 30° past top dead center and expansion of the combustion volume is becoming more marked, the vent is now doubly sealed, the passage from the timing slot to the spray nozzle is being reduced but is still open, the pump is still in communication with the interior although the rate of delivery is about to change from an accelerated rate to a decelerating rate. The interrupter valve has just "pinched off" communication from the interior to the timing slot without shock and the spray nozzle will now close, also without shock. Combustion is completed.

Another 15° of crankshaft travel, the piston is now 45° past top dead center and expansion is rapid, the interrupter valve groove is approximately 90° from the timing slot, the pump is in communication with the interior and will remain in communication until it has completed its stroke at which point the discharge valve will close and the vent will begin to open, beginning the injection cycle for the next cylinder.

During the foregoing the engine speed has been at or near its minimum and the ignition lag of the fuel at a minimum as expressed in degrees of crankshaft travel.

Assuming now that the engine has speeded up to its average or mean speed and that the timing valve **41** has been moved angularly to its intermediate position, the action can be traced as follows:

With the piston at 45° before top dead center the interrupter valve, injection pump plunger, and distributor valve are again in the same position as before but due to the movement of the timing valve the interrupter valve will contact the timing slot sooner and the vent is inoperative (the distance from the nearest edges of the vent and the lower groove leading to the interior being greater than the openings in the distributor valve) with the result that the "interior" is partially charged with the residual discharge from the impulse pump.

Piston now 30° before top dead center, pump plunger moving up, suction ports open, passage to interior closed, vent sealed, timing slot to spray nozzle open.

Piston now 15° before top dead center, interrupter valve has just established communication through the timing slot permitting the residual fuel under the influence of the injector plunger spring to flow to the spray nozzle. The distributor valve has just begun to open the passage from the pump to the interior, but the impulse pump discharge valve will remain seated as long as the pressure in the interior exceeds that within the impulse pump.

Piston is now on dead center, fuel is still flowing from the interior under the influence of the injector plunger spring but at a decelerating rate due to the extension of the latter; the passage from the impulse pump to the interior is open; the impulse pump plunger has sealed the suction ports and is beginning to force the discharge valve off of its seat. Injection having been initiated at a comparatively high pressure, ignition lag is still short and combustion has been initiated.

The piston is now 15° past top dead center and started down on the power stroke; the impulse pump is delivering fuel at an accelerating rate as before, thus maintaining combustion at a relatively high level. The interrupter valve has just "pinched off" communication to the spray valve which is now closing.

Piston is now 30° past top dead stop center, combustion completed (approximately on the Sabathé or mixed cycle); interrupter valve groove is about 90° past the timing slot; the distributor valve is beginning to close off the passage from the timing slot to the spray nozzle; the pump is filling the interior to a degree determined by the axial position of the timing valve, any excess fuel being vented through the spill port in the timing valve.

Piston now 45° past top dead center, expansion proceeding rapidly, passage from interior to timing slot and from timing slot to spray nozzle both sealed, pump nearing end of stroke, interior charged with residual fuel for next injection.

Assuming now that the engine speed is at or near its maximum and that the timing valve 41 has moved to the full advance position, the action may be traced as follows:

Piston 45° ahead of top dead center, passage from timing slot to spray valve opened, passage from pump to interior sealed by distributor valve and discharge valve, vent wholly inoperative, pump plunger rising and suction ports uncovered as before. Interrupter valve same position as before but due to position of timing valve, timing slot only 90° (15° crankshaft travel) away.

Piston 30° ahead of top dead center, passage from timing slot to spray valve open, passage from pump to interior still sealed by both the distributor valve and discharge valve, pump plunger rising but suction ports still uncovered. Interrupter valve is just beginning to communicate with spray valve through the timing slot, the interior having been fully charged from the previous pump stroke. Injection is being initiated at maximum pressures under the influence of the injector plunger spring.

Piston now 15° before top dead center, the interrupter valve is fully open and injection is proceeding at or near the maximum possible rate under the influence of the injector plunger spring, the passage from the interior to the impulse pump is open but the suction ports are also still uncovered and the discharge valve seals the pump against the pressure in the interior. Since the ignition lag of the fuel, expressed in degrees of crankshaft travel, is comparatively great at high engine speeds, the fuel injected up to this point is just beginning to ignite and most of it will burn between now and the next position.

Piston now on top dead center, the interrupter valve is just "pinching off" communication from the interior to the spray valve, which is closing, the impulse plunger has just sealed the suction ports and is about to force the discharge valve off of its seat.

Combustion is practically completed with considerable pressure rise in the cylinder (approximating constant volume or Otto cycle combustion).

Piston now 15° past top dead center and starting on power stroke. Interrupter valve has sealed interior from spray valve, impulse pump delivering fuel at an accelerated rate as before but with interrupter valve closed pump can only recharge interior, thereby transforming the pumping energy into spring energy by displacing the injector plunger and compressing the injector plunger spring.

The piston now 30° past top dead center, interior is practically fully charged as the pumping rate changes from acceleration to deceleration.

Piston now 45° past top dead center, interior fully charged, ready for the next injection, injector plunger spring heavily compressed, impulse pump still delivering fuel at a rapidly decelerating rate, the excess fuel passing off through the spill port in the timing sleeve.

In all of the foregoing operating diagrams, the duration of injection, as determined by the size, shape and relative position of the timing slot and interrupter valve groove has been assumed to be at its maximum.

Other modes of applying the principle of my invention may be employed instead of the one explained, change being made as regards the mechanism herein disclosed, provided the means stated by any of the following claims or the equivalent of such stated means be employed.

I therefore particularly point out and distinctly claim as my invention:

1. As an element of a fuel supply system for internal combustion engines, a combined accumulator and diverter comprising a body having a cylindrical bore, a rotatably driven cylindrical valve mounted in said bore, a rotatably and axially movable cylindrical sleeve within said valve in close-fitting engagement therewith, a spindle adapted to be rotatably driven from the engine and in synchronism with said valve extending into one end of said sleeve, and an axially movable spring loaded plunger extending into the other end of said sleeve.

2. As an element of a fuel supply system for internal combustion engines, a combined accumulator and diverter comprising a body having a cylindrical bore, a rotatably driven cylindrical valve mounted in said bore, a rotatably and axially movable cylindrical sleeve within said valve in close fitting engagement therewith, a spindle adapted to be rotatably driven from the engine and in synchronism with said valve extending into one end of said sleeve, and an axially movable spring loaded plunger extending into the other end of said sleeve, said valve and said sleeve being apertured to receive fuel from a space between said spindle and plunger, said spindle having a groove or passage adapted upon relative rotation of said spindle and sleeve to place the space between said spindle and plunger in communication with a discharge aperture in said sleeve and discharge apertures in said valve, said body being provided with the necessary apertures to permit ingress and egress of the fuel through the apertures in said sleeve.

3. As an element of a fuel supply system for internal combustion engines, a combined accumulator and diverter comprising a body having a cylindrical bore and apertures for permitting ingress of fuel to and egress of fuel from said bore, a rotatably driven cylindrical valve mounted in said bore, said valve having a plurality of circumferentially spaced apertures successively communicable with said ingress aperture as the valve rotates and outlet apertures spaced axially of the valve, and from said circumferentially spaced apertures, a cylindrical sleeve within said valve in close fitting engagement therewith, a spindle rotatable in timed relation with said valve extending into one end of said sleeve, and an axially movable plunger extending into the other end of said sleeve.

4. As an element of a fuel supply system for internal combustion engines, a combined accumulator and diverter comprising a body having a cylindrical bore and apertures for permitting ingress of fuel to and egress of fuel from said bore, a rotatable cylindrical valve mounted in said bore, said valve having a plurality of circumferentially spaced inlet apertures successively communicable with said ingress aperture as the valve rotates and a pair of outlet apertures spaced axially of the valve and communicable with said egress aperture as the valve rotates, one of said outlet apertures being disposed in a side of said valve opposite that in which the other outlet aperture is disposed, a cylindrical sleeve within said valve in close-fitting engagement therewith, a spindle rotatable in timed relation with said valve extending into one end of said sleeve, and an axially movable spring-loaded plunger extending into the other end of

said sleeve, said sleeve being apertured to receive fuel from said inlet apertures and conduct the same into the space between said spindle and plunger, and being apertured to conduct fuel from said space to said outlet apertures, said spindle having a groove or passage adapted upon relative rotation of said spindle and sleeve to place said space in communication with the discharge aperture in said sleeve.

5. A fuel pump and distributor unit for internal combustion engines comprising a body having a cam driven impulse pump, a cylindrical bore, a cylindrical valve mounted in said bore, a cylindrical sleeve mounted within said valve and in close fitting engagement therewith, a spindle extending into one end of said sleeve, and means for rotating said valve and spindle in timed relation with said pump.

6. A fuel pump and distributor unit for internal combustion engines comprising a body having a cylindrical bore, an impulse pump for delivering charges of fuel to said bore, a cylindrical valve mounted in said bore, a cylindrical sleeve mounted within said valve, a spindle extending into one end of said sleeve, and means driven by the pump actuating means for driving said valve and spindle in timed relation with each other, and in timed relation with said impulse pump.

R. W. HAUTZENROEDER.