Sept. 19, 1950 D. D. HINMAN 2,523,021

STARTING ARRANGEMENT FOR ELECTRIC DISCHARGE DEVICES

Filed July 19, 1945

FIG. 1.

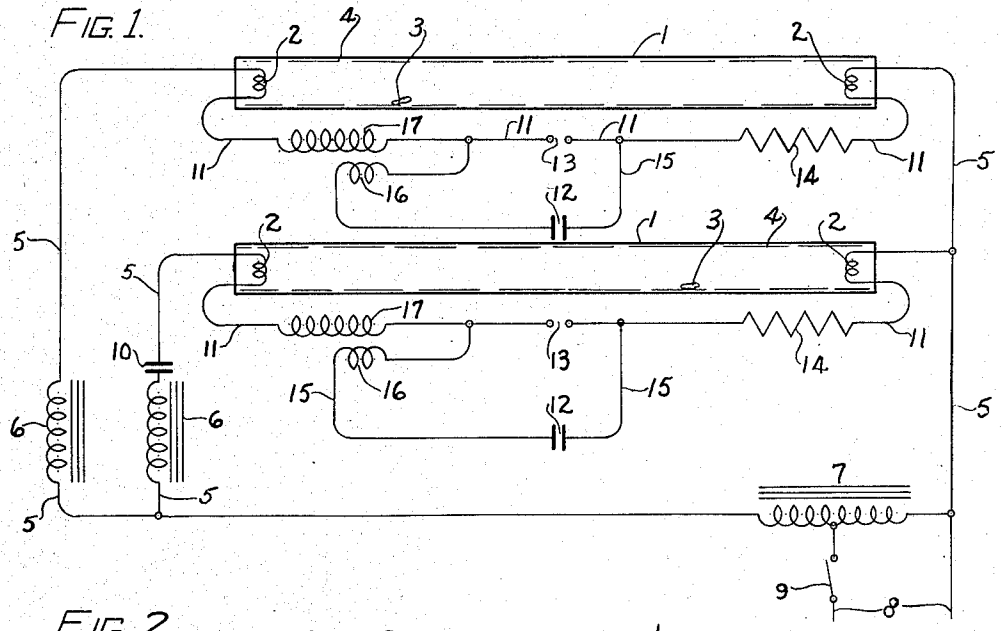

FIG. 2.

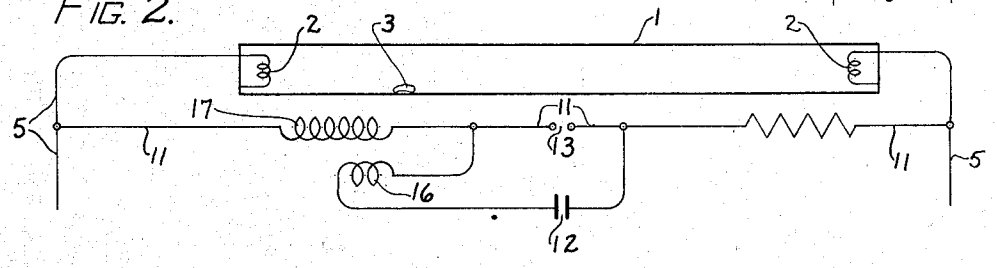

FIG. 3.

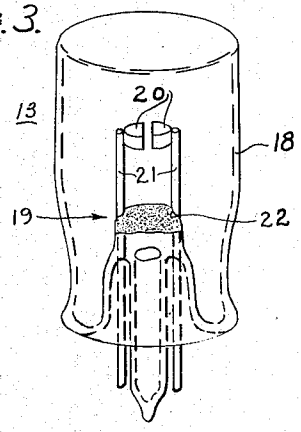

INVENTOR.
DONALD D. HINMAN.
BY John H. Anderson
HIS ATTORNEY

Patented Sept. 19, 1950 2,523,021

UNITED STATES PATENT OFFICE

2,523,021

STARTING ARRANGEMENT FOR ELECTRIC DISCHARGE DEVICES

Donald D. Hinman, Cleveland Heights, Ohio, assignor to General Electric Company, a corporation of New York

Application July 19, 1945, Serial No. 605,900

4 Claims. (Cl. 315—98)

1

This invention relates to the starting control of electric discharge devices, and is very useful for fluorescent tubes of positive column discharge type, as well as for various other discharge devices. The invention is especially adaptable for starting discharge devices quickly, without the delay usually entailed by preheating their cathodes.

As is well known, the voltage required to start a discharge through an ionizable atmosphere (gas or vapor, or both) is considerably higher than that required to maintain it after it has started. Even this operating voltage is often different from ordinary lighting supply circuit voltages, so that a transformer is generally interposed between the supply circuit and the operating circuits of an installation, to give the required voltage. In any case, current-limiting chokes or ballasts are commonly interposed in the operating circuits. Such ballasts usually have inductance, and may also include capacitance. Very commonly, the ballast is structurally built into the transformer. In the case of D. C. discharges, means other than transformers are employed to give the desired voltage, but resistive or reactive ballasts are used to control the discharge current.

Most fluorescent lamps of positive column low pressure discharge type are at present "hot-starting," with flow of heating current through their cathodes to preheat them before discharge is initiated. For this purpose, a starting circuit with an automatic switch therein is connected across the operating circuit, in parallel with the discharge gap of the lamp and through heating means embodied in the cathodes. The automatic switch passes current through the cathode-heating means long enough to bring the cathode(s) of a lamp up to an adequate emissive temperature, and then suddenly opens the starting circuit, giving rise to a high voltage "kick" between the electrodes (due to the inductance in the operating circuit, and much higher than the operating voltage of that circuit) which generally suffices to initiate the discharge.

The time required to preheat the cathodes to the operating temperature of adequate thermionic emission is appreciable, so that at best an undesirable brief interval elapses between the closing of the manual switch controlling an installation and the actual lighting up of the lamps. Moreover, the action of starters in common use is often irregular, so that the lapse of time between closing the control switch and lighting up all the lamps may often amount to a

2

quarter of a minute, more or less. These drawbacks have heretofore been unavoidable in practice, because starting of lamps "cold," without cathode preheat, resulted in rapid disintegration of the cathodes and blackening of the lamps.

Recently, cathodes have been evolved which stand cold starting so much better that it is feasible to do away with hot starting and with starting switches, so that fluorescent lamps will light instantly (or practically so) when the controlling switch is closed, just like incandescent lamps. For this purpose, a leakage-reactance transformer may be used between lighting supply circuit and the discharge circuits, to give high open-circuit voltage for initiating discharge, followed by suitably lower voltage for ordinary operation.

While this arrangement is generally successful, it has the disadvantage of requiring larger and more expensive transformers than those now in use for hot-starting installations, in order to assure starting under unfavorable atmospheric conditions of very high humidity. For example, 40-watt fluorescent lamps of tubular, low-pressure, positive column type may require as high as 800 volts or more to insure starting under the most adverse conditions, as against a voltage of some 110 volts (more or less) in subsequent operation. The size and cost of the auxiliaries for such voltages would be well-nigh prohibitive.

In my copending application Serial No. 564,479, now Patent No. 2,451,830, issued October 19, 1948, I have disclosed novel arrangements which afford ample voltage to assure starting of the discharge under the most adverse conditions, without necessity for large or expensive auxiliaries, and without the irregularity of starting that is almost characteristic of certain much-used types of starting switches. This is accomplished by induced high voltage generated and applied in a novel way, which is applicable to discharge lamps operating on D. C., as well as to A. C. systems. For this purpose, a starting circuit that is connected across the operating circuit in parallel with the main discharge device includes a branch or loop circuit which has therein a capacitor or condenser and an auxiliary electric discharge device (e. g., a thyratron, spark-gap, or other auxiliary discharge device), and this loop is inductively coupled to a circuit that is connected to the main discharge electrodes. In the particular species or type of starting arrangement illustrated in my said application, the circuit to which the loop in ques-

tion is inductively coupled is the main operating circuit itself. This renders the induced high voltage most effective for initiating the main discharge; on the other hand, it has the drawback of making the starting "unit" comprising the parts set forth a "four contact" device, since the unit must have contacts or terminals for connection into the main operating circuit, as well as contacts or terminals for connection into the starting circuit.

I have now discovered that high voltage induced in essentially the same way can be applied to start the main discharge in a different way, without necessity for radical changes in existing installations. For this purpose, the loop circuit wherein the high voltage is generated is inductively coupled to a portion of the starting circuit that is in series with the loop, instead of to the main operating circuit. Though high voltage impulses thus applied to the starting circuit may be less effective, because they may be partly dissipated in a portion of the operating circuit that includes the ballast and the transformer (or its equivalent in the case of D. C.), yet I have nevertheless found it possible to generate voltage impulses powerful enough to effect starting even under these less favorable conditions. At the same time, the great practical advantage is gained that the starting unit can be a "two contact" device requiring only to be connected into the starting circuit in lieu of the starter previously used, without also being connected into the main operating circuit.

Other features and advantages of my invention will appear from the description of species or forms of embodiment, and from the drawings.

In the drawings, Fig. 1 is a circuit diagram showing starting and operating arrangements for discharge lamp(s) operating on A. C.; Fig. 2 is a fragmentary diagram illustrating a modification; and Fig. 3 is a tilted view of one form of spark-gap device that is suitable and convenient for use in the starting circuits illustrated in Figs. 1 and 2.

Figs. 1 and 2 illustrate the application of the invention to a discharge device 1 such as the low pressure positive column fluorescent lamp exemplified in U. S. Patents Nos. 2,294,203 to Peters, 2,330,161 to Townsend, and 2,306,925 to Aicher, heretofore ordinarily started "hot" after a period of cathode preheat. As shown in Fig. 1, the tubular envelope of the device 1 has spaced-apart activated thermionic cathodes 2, 2 in its ends. These electrodes 2, 2 may be of the usual coiled or coiled-coil tungsten filament type, coated or charged with activating oxides such as a mixture including barium and strontium oxides. The envelope may contain a low-pressure atmosphere of ionizable starting gas, such as argon at a pressure of 2 to 6 mm. of mercury, or other inert rare gas(es) at a corresponding pressure, and also a vaporizable and ionizable working substance or metal such as mercury, which is indicated by a droplet 3 inside the envelope. An internal coating of fluorescent material or phosphor 4 on the envelope walls is also indicated.

The discharge device is shown connected across an operating or discharge circuit 5 including the inductive ballast 6. For energizing it, the operating circuit 5 is shown connected across the secondary of an autotransformer 7 whose primary is connected across a voltage source such as an ordinary 60 cycle A. C. lighting circuit 8 of some 110 to 120 volts, for example. The usual make-and-break wall or other control switch 9 is shown in the circuit 8. To illustrate usual conditions of operation, two similar discharge devices 1, 1 are shown connected across the transformer secondary in parallel lead and lag circuits 5, 5. As usual, the lead circuit 5 includes a condenser 10, which besides other functions also serves as ballast to limit the discharge current. The transformer 7 is of course chosen to give or assure the desired voltage across each of the operating circuits 5, 5. Once the discharge has started, the voltage across each device 1 is regulated or reduced by its ballast 6 to a favorable value for the operation of the device 1, which may be the closed circuit voltage on which the device would be operated in present hot-starting practice.

For the purposes of my invention, a starting circuit 11 is shown connected across the operating circuit 5 of each of the discharge devices 1, 1. Each circuit 11 is provided with means for generating high voltage oscillations and applying them across the discharge gap between the electrodes 2, 2 of the corresponding device 1, such means comprising a capacitor or condenser 12 and an auxiliary electric discharge device 13 in shunt with one another in said circuit auxiliary 11, with an inductive coupling between one side of the shunt and the starting circuit 11, and, as shown, an impedance 14 in series with the shunt-connected condenser and electric discharge device or spark-gap. The circuit 11 here shown includes a loop circuit 15 in which the condenser 12 and spark-gap 13 are connected in parallel, so as to be in series with the rest of circuit 11 including impedance 14; and the loop circuit 15 also includes the primary 16 of a high frequency transformer in inductive relation to the secondary 17 in the starting circuit 11, in series with loop 15 and impedance 14. Specifically, the inductive primary 16 is shown connected to the circuit 11 between the spark-gap 13 and the connection of said circuit 11 to the operating circuit 5 through the cathode coil 2; and the secondary 17 is interposed in the circuit 11 between the connection of the loop side including primary 16 to said circuit 11 and the connection of the latter to circuit 5. It makes no difference whether the impedance 14 is connected in said circuit 11 at one side of the parallel-connected condenser 12 and the spark-gap 13 or at the other side thereof. Nor is it very important which of the direct connections between condenser 12 and device 13 includes the primary 16, or which end of this primary is connected to the condenser, and which to the spark-gap.

The discharge device(s) or spark-gap(s) 13 should have a break-down voltage less than the open-circuit voltage across the secondary of transformer 7, and, therefore, less than the break-down voltage of any device 1 which the transformer cannot start unaided. The device 13 should preferably show a large difference between break-down and maintaining voltages; but the maintaining voltage should preferably be higher than the voltage on said device 13 during ordinary operation of the discharge device(s) 1, so as to assure cessation of the discharge in device 13 during the ordinary operation of said discharge device(s) 1, as hereinafter explained.

One suitable device 13 is of moderately low-pressure gaseous discharge type, resembling a glow-lamp in general construction, but showing opposite characteristics: i. e., an unstable glow-discharge which is sustained largely by field emission and tends to hot-spot. Such a device 13 is

illustrated in Fig. 3 as comprising a sealed vitreous envelope 18 containing a flare and stem press type of mount 19, with a pair of flat electrodes 20, 20 (resembling halves of a circular disc) suitably spaced apart, and carried by inward-extending lead wires 21, 21 sealed through the press. These electrodes 20, 20 may have a thickness of about $\frac{1}{16}$ inch and a semi-circle diameter of about $\frac{5}{32}$ inch. They may consist, for example, of an emissive nickel-tungsten composition activated with barium, which may be mainly in the form of barium oxide, BaO. They may be prepared from a batch mixture of finely divided ingredients comprising by weight:

	Parts
W (325 mesh grains)	80
NiO	10
$BaCO_3$	10

This mixture is pressed into the desired shapes in a pill machine, and these are fired for 20 to 30 minutes at 1453° to 1510° C. in hydrogen to render them coherent. In accordance with U. S. Patent 2,332,809 to Peters, the inner end of the stem press 19 is painted with aluminum paint 22 in contact with both leads 21, 21 to obviate "dark effect" alterations of break-down voltage of the device.

A mode of operation of the system shown in Fig. 1 is that when the switch 9 is closed to turn on the lamps 1, 1, A. C. voltage is applied in each operating circuit 5 and in each starting circuit 11, charging the corresponding condenser 12 through the corresponding resistance 14, and also tending to "break down" the corresponding discharge device or spark-gap 13. When the device 13 breaks down or becomes conducting, the condenser 12 discharges through it, producing in the "oscillating" loop circuit 15 and in the primary 16 a current surge or surges, or a series of high frequency electrical oscillations. Such breakdown may occur once or several times during each 60 cycle or other A. C. wave in the circuits 8, 5. The rapidly changing current in primary 16 induces in secondary 17 a high voltage which appears across the discharge gap in the discharge device or lamp 1. When such a voltage impulse coincides with a corresponding impulse due to the A. C. supply in circuit 8, or occurs in such phase relation thereto that the algebraic sum of the voltages suffices to break down or render conductive the discharge atmosphere in the device 1—which happens in a fraction of a second after switch 9 is closed—discharge in the device 1 is successfully initiated. Moreover, the high frequency from 17 after a glow discharge has started in the device 1 helps to change this over into a positive column or arc discharge.

When the discharge starts, the resistance of the device 1 falls off to a minor fraction of its value before breakdown (which is of the order of megohms), and the voltage across the spark-gap 13 (as limited by the impedances 7, 6, 14, 12, 16 when current is flowing through them) decreases so much that the device 13 drops out and ceases to carry current. During ordinary operation, therefore, current flow in the circuit 11 is limited by the impedances 14, 12, 16 to a trifling value which may be no more than a couple of milliamperes, representing an energy loss that is inappreciable.

Because of the high frequency of the electrical oscillations produced as above described in the primary 16, the number of turns that are needed in the secondary 17 to produce the desired starting voltage is far less than it would be for ordinary commercial frequencies of 60, 50, or 25 cycles, so that this secondary and the inductive device or transformer embodying it may be of relatively small size and weight. For oscillations of sufficiently high frequency, the transformer 16, 17 may be of air-core type; however, an iron core makes for smaller dimensions, with less copper, and lower secondary resistance.

For the convenience of persons wishing to practice my invention, I will now give specific details of design for a system such as shown in Fig. 1; but these are to be understood as illustrative, and not as limiting or defining the invention. For starting and operating 40-watt fluorescent lamps of the present T-12, 48 inch tubular, positive column, low-pressure type, the open-circuit voltage produced by the transformer 7 across the operating circuit(s) 5 may be some 200 volts. Accordingly, a unit comprising ballasts 6, 6, transformer 7, and condenser 10 which is now in common use for lead-and-lag pairs of fluorescent lamps may likewise be employed in the system here illustrated. The condensers 12 may be of 0.25 microfarad each, and the resistances 14 of 250 ohms each. The transformer(s) 16, 17 may be of auto type, or may have separate primary and secondary windings. In general, their design is not at all critical. One satisfactory transformer of this latter character has separate primary and secondary windings, the primary consisting of 10 turns of #30 enamelled copper, on and next to a ¼ inch square core 1 inch long consisting of 4-mil thick lamina of transformer iron, the secondary consisting of 200 turns of #30 enamelled copper wire wound over the primary.

For use with a 40-watt fluorescent lamp starting system embodying the particulars above set forth, the gap between the electrodes 20, 20 of discharge device 13 may be about 15 to 20 mils, and the gas filling in the envelope 18 may be argon at a pressure of about 100 to 200 mm. Thus constructed, the device 13 shows a breakdown voltage of about 175 volts R. M. S., and the voltage across it becomes negative during part of each cycle of the discharge voltage in the circuits 8, 5.

In Fig. 1, the starting circuits 11 are shown as connected across the operating circuit 5 through the cathode coils 2, 2 of the lamp 1, since this is the usual arrangement of starting circuits in existing installations where the cathodes are preheated for starting. However, the starting circuit 11 can just as well be connected across the operating circuit 5 directly, between points of said circuit 5 in advance of the cathodes 2 or even of the sockets or other means with which discharge circuits are usually equipped for making connection to the lamp electrodes 2, 2 through contact terminals on the lamps (not shown). This discharge circuit connection is illustrated in Fig. 2 where various parts and features are marked with the same reference characters as in Fig. 1, as a means of dispensing with repetitive description. For simplicity, only the parts directly associated with a single lamp 1 are included in Fig. 2, the corresponding ballast 6 and the parts 7, 8, 9 being omitted.

In D. C. systems involving my invention, the means for providing the desired voltage across the discharge circuit will of course be different from the transformer 7 here illustrated; the lead and lag circuit features will be omitted; and the discharge-controlling ballast 6 may be purely

resistive instead of inductive or capacitative, or it may be both resistive and inductive. However, the starting circuit 11 and the condenser 12, discharge device or spark-gap 13, transformer 16, 17, and current-limiting impedance 14 may be essentially the same as shown in Fig. 1.

What I claim as new and desire to secure by Letters Patent of the United States is:

1. In combination, an electric discharge device containing an ionizable atmosphere and coacting electrodes, an operating circuit connected to said electrodes, a starting circuit connected across said operating circuit and including a loop circuit and a current-limiting impedance in series with said loop, a capacitor and an auxiliary electric discharge device connected in said loop in parallel with one another with respect to said impedance, said auxiliary discharge device having a break-down voltage less than the starting voltage of the first-mentioned device and a maintaining voltage greater than the operating voltage of the first-mentioned device, and an inductive coupling between said loop and a portion of the starting circuit that is in series with the loop.

2. A starter for connection across the operating circuit of an electric discharge device containing an ionizable atmosphere, said starter being connected across said device and comprising an oscillating loop circuit and a current limiting impedance connected in series with the loop, a capacitor and an auxiliary electric discharge device connected in said loop in parallel with one another with respect to said impedance, said auxiliary discharge device having a break-down voltage less than the starting voltage of the first-mentioned device and a maintaining voltage greater than the operating voltage of the first-mentioned device, and a transformer having its primary connected in said loop and its secondary connected in series with said loop.

3. A starter for connection across the operating circuit of an electric discharge device containing an ionizable atmosphere, said starter being connected across said discharge device and comprising an oscillating loop circuit and a current limiting impedance connected in series with the loop, a capacitor and an auxiliary electric discharge device connected in said loop in parallel with one another with respect to said impedance, said auxiliary discharge device having a break-down voltage less than the starting voltage of the first-mentioned device and a maintaining voltage greater than the operating voltage of the first-mentioned device, and a high-frequency transformer having its primary connected in said loop and its secondary connected in series with said loop.

4. In combination, an alternating current supply circuit, an electric discharge device containing an ionizable medium and cooperating electrodes, a starting circuit for said discharge device connected thereacross and comprising an oscillating loop circuit and a current-limiting impedance in series with the loop, a capacitor and an auxiliary electric discharge device connected in said loop in parallel with one another with respect to said impedance, said auxiliary electric discharge device having a break-down voltage lower than the supply voltage in said supply circuit and a maintaining voltage higher than the voltage on the first-mentioned discharge device during operation thereof, and a high-frequency transformer having its primary winding connected in said loop circuit and its secondary winding connected in series with said loop circuit.

DONALD D. HINMAN.

REFERENCES CITED

The following references are of record in the file of this patent:

UNITED STATES PATENTS

Number	Name	Date
1,555,547	Bethenod	Sept. 29, 1925
1,976,645	Westendorp	Oct. 9, 1934
2,326,597	Abernathy	Aug. 10, 1943