PCT

WORLD INTELLECTUAL PROPERTY ORGANIZATION
International Bureau

INTERNATIONAL APPLICATION PUBLISHED UNDER THE PATENT COOPERATION TREATY (PCT)

(51) International Patent Classification 5 : G10K 13/00

A1

(11) International Publication Number: WO 91/07742

(43) International Publication Date: 30 May 1991 (30.05.91)

(21) International Application Number: PCT/US90/06643

(22) International Filing Date: 13 November 1990 (13.11.90)

(30) Priority data:
436,914 14 November 1989 (14.11.89) US

(71) Applicant: LINAEUM CORPORATION [US/US]; 1238 N.W. Glisan, #404, Portland, OR 97209 (US).

(72) Inventors: PADDOCK, Paul., W. ; 5001 N.E. Mineral Springs Road, McMinnville, OR 97128 (US). GEIST, Steven, R. ; 15100 S.E. Grant, Portland, OR 97233 (US).

(74) Agent: KLITZKE, Ramon, A.; Klarquist, Sparkman, Campbell, Leigh & Whinston, 121 S.W. Salmon Street, 1600 One World Trade Center, Portland, OR 97204 (US).

(81) Designated States: AT, AT (European patent), AU, BB, BE (European patent), BF (OAPI patent), BG, BJ (OAPI patent), BR, CA, CF (OAPI patent), CG (OAPI patent), CH, CH (European patent), CM (OAPI patent), DE, DE (European patent), DK, DK (European patent), ES, ES (European patent), FI, FR (European patent), GA (OAPI patent), GB, GB (European patent), GR (European patent), HU, IT (European patent), JP, KP, KR, LK, LU, LU (European patent), MC, MG, ML (OAPI patent), MR (OAPI patent), MW, NL, NL (European patent), NO, RO, SD, SE, SE (European patent), SN (OAPI patent), SU, TD (OAPI patent), TG (OAPI patent).

Published
With international search report.
Before the expiration of the time limit for amending the claims and to be republished in the event of the receipt of amendments.

(54) Title: IMPROVED AUDIO TRANSDUCER WITH CONTROLLED FLEXIBILITY DIAPHRAGM

(57) Abstract

An improved audio transducer includes a diaphragm (22) having a pair of cylindrically-shaped webs (24, 26) that provide greater bandwidth, reduced distortion and greater horizontal dispersion of sound. The audio output of the transducer is further improved by forming the diaphragm (22) of a polyvinyl fluoride film (112). Other improvements include the use of damping pads (66, 68, 70, 71) to damp internal sound waves and damping strips (73) on the diaphragm (22) to minimize distortion at the resonant frequency of the transducer. In one alternative embodiment a laminated diaphragm is used to damp resonance in the high-frequency end of the transducer operating range.

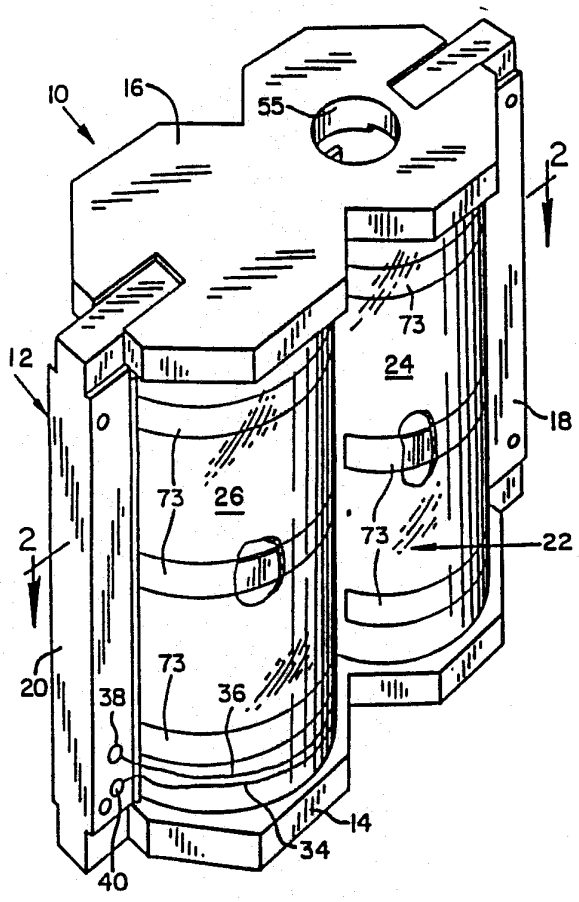

FOR THE PURPOSES OF INFORMATION ONLY

Codes used to identify States party to the PCT on the front pages of pamphlets publishing international applications under the PCT.

AT	Austria	ES	Spain	MG	Madagascar
AU	Australia	FI	Finland	ML	Mali
BB	Barbados	FR	France	MR	Mauritania
BE	Belgium	GA	Gabon	MW	Malawi
BF	Burkina Faso	GB	United Kingdom	NL	Netherlands
BG	Bulgaria	GR	Greece	NO	Norway
BJ	Benin	HU	Hungary	PL	Poland
BR	Brazil	IT	Italy	RO	Romania
CA	Canada	JP	Japan	SD	Sudan
CF	Central African Republic	KP	Democratic People's Republic of Korea	SE	Sweden
CG	Congo			SN	Senegal
CH	Switzerland	KR	Republic of Korea	SU	Soviet Union
CI	Côte d'Ivoire	LI	Liechtenstein	TD	Chad
CM	Cameroon	LK	Sri Lanka	TG	Togo
DE	Germany	LU	Luxembourg	US	United States of America
DK	Denmark	MC	Monaco		

IMPROVED AUDIO TRANSDUCER WITH CONTROLLED FLEXIBILITY DIAPHRAGM

BACKGROUND OF THE INVENTION

This invention generally relates to audio transducers. More particularly, the invention relates to improvements in the design of a transducer diaphragm having a pair of elongate resilient webs whose intermediate portions form an expanse that extends generally in a plane and that is mounted for movement in the direction of the plane.

Various types of audio transducers, as exemplified by audio loudspeakers, are known in the prior art. One common form of transducer comprises a cone with an attached electromagnetic motor driving element. The cone is mounted to a frame by a flexible expanse which bounds the perimeter of the cone. This type of transducer is generally characterized by a relatively high diaphragm and coil mass which creates high inertial forces in the diaphragm. These forces limit the ability of the diaphragm to vibrate at high frequencies and thus reduce its frequency response drastically at frequencies above 5 kHz. Conversely, if the diaphragm and coil are of relatively low mass to raise the upper end of the frequency response, the diaphragm has a reduced low frequency response. In addition to a limited frequency response, the cone-shaped diaphragm is typically molded from a paper product which renders it susceptible to changes in relative humidity. This alters the frequency response and limits the life of the transducer.

Another type of loudspeaker known in the art comprises a horn-type speaker having a flat diaphragm which oscillates normal to the plane of the diaphragm in response to activation by an electromagnetic driving element. As with the cone-shaped diaphragm, the flat diaphragm portion is mounted to a frame by means of an annular portion bounding a flat central portion. In some instances, the diaphragm may be suspended from a voice coil to which it is directly attached. With this type of

speaker a large horn is required to direct and focus properly the sound waves produced. Again, by reason of the mass of the diaphragm and voice coil, the frequency response of the transducer tends to drop off at high frequencies. Moreover, the transducers just described tend to be very expensive.

Such prior audio transducers generally have a limited bandwidth and are optimized for specific frequency ranges such as low, mid, and high frequencies. To provide adequate frequency response over the entire audio spectrum, three or four types or sizes of transducers must be incorporated into a single cabinet. The additional transducers increase the cost of high quality sound reproduction. Moreover, the use of multiple transducers requires the incorporation of complex crossover networks to isolate audio signals traveling to or emanating from the individual transducers.

U.S. Patent No. 4,584,439, which is incorporated herein by reference, discloses an audio transducer that overcomes the shortcomings and difficulties indicated above. The embodiment described therein includes a diaphragm having a pair of elongate resilient webs whose intermediate portions form an expanse extending generally in a plane and having curved end portions which extend laterally away from the plane to terminate at remote frame locations. The webs thus appear from a top view as a pair of back-to-back "C"s joined at their midpoints. The expanse is supported in the frame by string-like supports to allow the expanse to move in the direction of the plane. To complete the diaphragm, a wire coil is attached to the expanse and magnets are mounted on opposite sides of the expanse to provide a magnetic field across the expanse. Current in the coil proportional to received audio impulses creates a magnetic field that interacts with the existing magnetic field to vibrate the webs and generate sound waves thereby.

The illustrated embodiment disclosed therein, however, has some physical limitations. The bandwidth is

somewhat limited. The lower cutoff frequency is typically around 1200 Hz rather than the hoped-for cutoff of 100 Hz. The diaphragm also incurs reflections of waves in the web material at the locations where the webs terminate in the frame. The reflected waves to some degree distort the amplitude response of the diaphragm by canceling some waves in the web and doubling others so that the amplitude of the sound produced is uneven. The embodiment also exhibits broad band material resonance. The shape of the frame, combined with the diaphragm and string-like materials, produces distorting resonance around 1 kHz. Still another problem with the prior design is the limited horizontal dispersion. Sound from the transducer radiates forward in about a 30° arc from the central expanse, leaving much of a room without direct exposure to the sound.

SUMMARY OF THE INVENTION

An object of this invention, therefore, is to provide an improved transducer featuring a construction which overcomes the difficulties and shortcomings indicated.

More specifically, an object of the invention is to provide a transducer with an improved diaphragm construction that increases the transducer bandwidth and decreases distortion.

Another object of the invention is to provide a transducer with a diaphragm constructed from a material that significantly decreases distortion.

Still another object of the invention is to provide a transducer with a diaphragm constructed to dispense sound over a wider arc.

An improved transducer according to the present invention includes resilient webs that each extend from a central expanse in an arc to a remote frame location substantially aligned through the expanse with the other frame location. In one embodiment of the invention, each web may extend in opposite arcs to form a substantially cylindrically shaped web. The pair of webs so shaped

provide greater bandwidth, reduced distortion and greater horizontal dispersion of sound.

The performance of the transducer may be further improved by forming the diaphragm from a resilient plastic such as polyvinyl fluoride film. This material has superior flexing characteristics that improve the frequency response in the high range.

Other improvements include unique damping pads and damping strips as well as frame shape to further enhance the sound reproduction.

In another embodiment of the present invention, each web is formed of a laminate that provides very effective resonance damping in the high-frequency end of the transducer operating range.

DESCRIPTION OF THE DRAWINGS

FIG. 1 is a perspective view of a transducer according to the present invention.

FIG. 2 is an enlarged cross-sectional view of the transducer, taken along line 2--2 of FIG. 1.

FIG. 3 is an enlarged median sectional view, taken along line 3--3 in FIG. 2, showing the configuration of a coil in schematic form.

FIG. 4 is a greatly enlarged view of a portion of FIG. 2 where the coil and magnets of the transducer are located.

FIG. 5 is a side view of the webs.

FIG. 6 is a cross-sectional view of another embodiment of the transducer.

FIG. 7 is a side view of a conventional cone loudspeaker in which the diaphragm is constructed of polyvinyl fluoride film.

FIG. 8 is a sectional view of a laminated diaphragm formed in accordance with another aspect of this invention.

DETAILED DESCRIPTION

Turning now to the drawings, and particularly to FIGS. 1 through 4, an audio transducer according to the present invention is shown generally at 10. The

transducer described herein is intended for use as an audio loudspeaker. It should be understood, however, that use of the transducer is not so limited and is also suitable for, and functions quite efficiently as, a microphone.

Transducer 10 includes a frame 12 having a double octagonal-shaped bottom member 14, a double octagonal-shaped top member 16, and opposing rectangular side members 18, 20, which interconnect and are rigidly attached to the top and bottom members. It has been determined that the segmented edge of bottom and top members 14 and 16 is more effective than a straight or curved edge at breaking up sound waves that vertically emanate from the surface of webs 24 and 26 of diaphragm 22, to be described. These sound waves, on encountering a smooth surface such as a curve, may be absorbed at certain wavelengths and thus increase signal distortion.

Frame 12 may be constructed of any suitable material of fairly high density and which has desirable acoustic properties, such as aluminum or particle board. The frame may also be formed of injection molded plastic. It has also been determined that by reducing the mass of the frame 12 from the prior design to the present design, the material resonant frequency has been shifted outside the frequency range of the transducer 10.

The transducer diaphragm is shown generally at 22 and includes in the present embodiment a pair of elongate resilient webs 24, 26. Each web includes flexible curved portions forming the ends of each web, joined to, and extending from, an intermediate, generally planar expanse. With reference now to FIG. 2, web 24 includes curved portions 24a, 24b and a central expanse 24c. Web 26 includes curved portions 26a, 26b and a central expanse 26c. The central expanses 24c, 26c of the two webs are joined together, as with an adhesive 28 best seen in FIGS. 3 and 4, into a joined central expanse. The joined central expanse, or diaphragm intermediate portion, may be thought of as an intermediate slack portion that is

movable generally in the plane occupied by the expanse.

The joined central expanse is supported on the frame 12 by the flexible curved portions at the ends of the diaphragm. Referring again to FIG. 2, each of the flexible end portions 24a, 24b, 26a, 26b extends in an arc from the joined central expanse to terminate in elongated slots at remote but adjacent frame locations 18a, 18b and adjacent locations 20a, 20b, respectively, on the outer portion of the front and rear edges of members 18, 20. Location 18a is substantially aligned with location 20a through the central expanse formed by web portions 24c, 26c. Location 18b is similarly aligned with location 20b. It has been determined that the extended arcuate configuration of the webs improves the prior transducer in at least three respects: the greater arc significantly reduces the reflection of waves in the web at the frame boundary location to improve the amplitude response; it lowers the frequency cutoff to about 150 Hz; and it increases the horizontal dispersion of sound waves from 30° to nearly 180°. The improved, unique web shape causes more of the wave motion in the web to be dissipated into the air and less of the motion to be reflected back into the web to distort the amplitude response. In the present embodiment, the arcs of web portions 24a and 24b are semicircular and opposite in direction to form a substantially cylindrically shaped web 24. Similarly, the arcs of web portions 26a and 26b are semicircular and opposite in direction to form a substantially cylindrically shaped web 26. It will be appreciated, however, that various combinations of arcs could be employed to form the cylindrically shaped webs.

Diaphragm webs 24, 26 are secured at each end to frame 12 by attaching each end portion to an isolation strip 29 extending the length of the elongated slot at each frame location 18a, 18b, and 20a, 20b. This arrangement insures that vibrations produced by the diaphragm are only minimally transmitted to the frame, enabling the diaphragm to expend most of its energy

producing sound waves. The isolation strips 29 may be made of a suitable shock-absorbing porous or fibrous material, such as foam rubber or felt. Strips 29 are removable for ease of disassembly. Alternatively, the end web portions may be glued directly to the frame.

Referring now to FIGS. 3 and 4, means such as an electromagnetic coil 30 is attached to the expanse of diaphragm 22 and is substantially enclosed by webs 24, 26 at their slack, intermediate portions 24c, 26c. Coil 30 is an elongate looped coil in the present embodiment and contains an ascending portion 30a, a descending portion 30b, and an upper and lower transverse portions 30c, 30d, respectively. Coil 30 may be formed of 10 turns of 36 gauge silver wire and is glued directly in place on web portions 24c, 26c with adhesive 28. The two web portions 24c, 26c are then glued together with an adhesive 29 placed within the interior of coil 30.

A pair of leads 34, 36 from coil 30 runs to frame side member 20 where they terminate in connectors 38, 40, respectively, seen best in FIG. 1. Connectors 38, 40 comprise means for connecting the coil 30 to a signal source such as an amplifier 46 for conducting electrical impulses between the coil and the source. The amplifier 46 generates alternating current impulses proportional to audio signals, which impulses shift polarity between 20 and 20,000 times per second.

Two sets of opposed magnets 48, 50 are mounted to the interior of the frame and held in place in retaining grooves cut in bottom and top members 14 and 16, respectively. Magnets 48, 50 may be of the metal bar-magnet type or, as in the present embodiment, high quality (strontium ferrite) ceramic magnets standard in the industry, fastened together in a stacked manner with adhesive. The magnets must be polarized across their major faces, as indicated in FIG. 4, for the transducer to properly function.

Two pairs of magnetically permeable plates 48N, 48S and 50N, 50S made from low carbon (0.003%) steel are

attached to the major faces of magnets 48, 50, respectively. An opposing magnetic field is established by polarizing the plates 48N and 50N to a north magnetic pole and polarizing plates 48S and 50S to a south magnetic pole. The plates thus produce an opposing magnetic field, whose lines of flux are normal to the expanse of diaphragm 22 across a gap 51 shown in FIG. 4. Magnets 48 and 50 are separated by a pair of nonferrous spacers 52, 54 shown in FIG. 3. The spacers in the preferred embodiment are copper rods which maintain the spacing 51 between magnets 48 and 50. In the present method of construction, the magnets 48, 50 are inserted through holes defined in the top and bottom members 16 and 14, such as hole 55 shown in FIGS. 1-3. These holes may then be plugged with felt (not shown) to complete the frame.

The diaphragm central expanse is supported and centered by upper and lower elastomeric cords 56, 58, 60, 62 such that coil portions 30a and 30b are each aligned with the magnetic field created by the adjacent permeable plates, as illustrated in FIG. 4. Each cord is secured at opposite ends to a neoprene spacer 64 adhered to the outer surface of each magnetically permeable plate. Each cord passes through an opening in the expanse sized to create an interference fit, such that the cord secures and yet resiliently supports the expanse. The length of cord on each side of the expanse as indicated at 65 in FIG. 2 determines the low frequency below which the frequency response of the diaphragm is attenuated. Such attenuation is desirable because the lower frequency response in a diaphragm has a greater amplitude and must be attenuated to improve the overall response. It has been determined that a cord length of 1/2 inch, with the cord fastened 1/4 inch away from each side of the expanse, satisfactorily attenuates frequencies below 100 Hz.

Affixed to each side of the central portion of members 18 and 20 is a means for damping the frequency response of the diaphragm above a predetermined cutoff frequency. This means may comprise felt pads 66, 68, 70,

71 mounted, respectively, within the arc of each web portion 24a, 24b, 26a and 26b. More specifically, a pair of felt pads 66, 70 or 68, 71 are located inside the cylindrical surface of each web 24, 26 and are attached at one edge to one side member 18 or 20 of the frame and at its opposed edge to the stacked magnets. The pads are each preferably sized to match the web height and extend substantially from the diaphragm central expanse to each of the remote frame locations 18a, 18b, 20a and 20b. The damping pads 66, 68, 70, and 71 damp sound waves that are generated within each cylindrically shaped web above a predetermined cutoff frequency. These sound waves otherwise interfere with the waves in the web material, acting to reinforce and cancel different waves. However, below a predetermined frequency, such internal sound waves are desirable to reinforce low frequency waves. The pads 66, 68, 70, 71 are chosen to slow the wave velocity to a rate at which such reinforcement occurs. It has been determined experimentally that felt of at least 80% wool content damps the frequency response above 500-700 Hz while slowing the wave velocity sufficiently to reinforce the lower frequency response.

The present transducer as best seen in FIG. 1 will have a resonant frequency dependent on the specific transducer size and the material employed. As shown in FIGS. 1 and 5, parallel strips of damping tape 73 are adhered at predetermined locations on the inside of each web end portion 24a, 24b, 26a and 26b. The strips of tape, preferably made of a woven fiberglass such as is found in strapping tape, aids in flattening the amplitude response and reduces harmonic distortion resulting from the device's resonant frequency and its multiples. Best results have been obtained with a damping tape mass of about 1/3 of the mass of the diaphragm 22, divided into strips spaced equidistantly apart from near the end of each web portion to the edge of the central diaphragm expanse. While three parallel damping strips are shown, it will be appreciated that an increased number of

parallel damping strips spaced equidistantly but closer together also works well.

Turning now to FIGS. 2 through 4, the workings of transducer 10 will be further explained. An electrical impulse arriving at connectors 38, 40 is transmitted to coil 30. Since coil 30 is a continuous loop, a flow of current is established in the coil, thereby producing a magnetic field about the coil. Current flow is represented in the coil 30 of FIG. 4 by flow indicators showing current going into the drawing at 30b and out of the drawing at 30a. Lines of magnetic flux between plates 48N and 50S are indicated by the arrows at 76, and the magnetic flux between plates 50N and 48S are indicated by the arrows at 78.

The location of the plates on either side of magnets 48, 50 produces a uniform external magnetic field through the wire of coil 30. As current passes through coil 30, resultant lines of magnetic induction are established, which essentially form a clockwise field around descending loop 30b and a counterclockwise field around ascending loop 30a.

The motion of a charged wire within a magnetic field is determined by the direction of current in the wire relative to the lines of magnetic flux. At any point where the two fields meet, the resultant magnetic induction will be the vector sum of the external field and the magnetic induction field associated with the current in the wire.

In the situation depicted, amplifier 46 has a "positive" lead connected to connection 38 and a "negative" lead connected to connection 40. This results in a current flow as depicted in FIG. 4. Under the influence of the current produced by amplifier 46, coil 30 will tend to move in the direction indicated by arrow 84. When the amplifier alternates current flow, current flow in coil 30 reverses, moving the coil and the diaphragm in a direction opposite that of arrow 84.

It should be obvious to those skilled in the art

that were coil 30 surrounded by a single, nonopposing magnetic field, the result of a current passing through coil 30 would be a torsional movement of the coil about its major axis, rather than a linear movement of the coil as is produced by the arrangement of the present invention.

Amplifier 46 produces a current of varying amplitude, thereby producing a resultant induced field about coil 30 of varying amplitude. The result is an oscillation of coil 30, and a resultant oscillation of diaphragm 22 of varying travel distance relative the permanent opposing magnetic fields established by magnets 48 and 50. A decrease in current amplitude within coil 30 results in a collapse of the induced magnetic field and produces a resultant movement in coil 30 and diaphragm 22 in a direction opposite that shown by arrow 84.

Thus, as shown by the dashed lines in FIG. 2, diaphragm 22 is free to deform along its flexible curved portions in response to movement induced by coil 30. Movement of the diaphragm in the direction of arrow 84 results in diaphragm 22 assuming the shape illustrated by the dashed line 86, while movement of the diaphragm opposite that of arrow 84 results in the configuration shown by dashed line 88. Movement of the diaphragm between these two representative positions is accomplished through a linear rolling-type action in that the flexible curved end portions deform to some extent, while the movable intermediate expanse remains substantially unflexed and continues to move within a plane defined by the central expanse of the diaphragm. Unlike the prior embodiment described in U.S. Patent No. 4,584,439, the rolling motion herein decreases substantially as the diaphragm flexes toward the remote frame locations 18a, 18b and 20a, 20b. The additional extent of diaphragm 22 thus minimizes wave reflection and improves the amplitude response.

The improved embodiment of the present invention has been tested and has been found to have an essentially

flat frequency response from about 150 Hz to 20 kHz, with harmonic distortion of less than 1%. This data compares favorably against the harmonic distortion of 5% to 10% found in high quality, conventional loudspeakers. Additionally, the transducer 10 has been found to have a nominal impedance of 5 ohms and to perform satisfactorily with a power input between 15 and 300 watts.

In addition to the substantially cylindrically shaped web, another primary reason for the improved performance of the transducer 10 is the use of a thin plastic film, such as polyvinyl fluoride (PVF) or polyester, for forming the diaphragm webs 24, 26. It has been discovered that PVF film, such as TEDLAR manufactured by E. I. DuPont De Nemours & Co., has superior flexing characteristics for transducer diaphragms. PVF film provides a "flat" frequency response in the higher frequency range, 8 kHz to 20 kHz. For example, amplitude variation across the higher frequency range was measured at less than 1 dB with webs formed of PVF film. This material thus provides a sound that does not exhibit the "harsh" or "bright" characteristics typical of the sound produced by transducers in this frequency range. Moreover, PVF film can be heat-molded into other diaphragm shapes, such as dome or cone-shaped diaphragms, one of which is shown as 98 in a conventional loudspeaker 100 in FIG. 7. An advantage of PVF film is that it may be used to form diaphragms in both magnetic-based transducers and electrostatic-based transducers.

With the present invention, a plurality of transducers 10 may be incorporated into a single cabinet. Since the transducer 10, when used as a loudspeaker, radiates sound waves bi-directionally, it may be desirable to include some baffling in a speaker cabinet to prevent "dead-spots," which may result from sound wave cancellation at certain points in the listening room. When the transducer is used as a microphone, however, it is bi-directionally sensitive, producing a microphone with a figure eight sensitivity pattern.

The transducer may be constructed with diaphragm webs of varying thicknesses and coils of varying electrical characteristics in order to produce a transducer which will respond within predetermined frequency ranges. Several transducers with differing sound-reproducing characteristics may be incorporated in a single loudspeaker cabinet and connected by means of a crossover network to respond to electrical impulses representing a particular frequency range.

The overall construction of the transducer enables production of the units without the need for complex, highly accurate placement of component parts. Component parts are readily available, and with simple construction techniques, enable production with minimal financial expenditures.

When the transducer is constructed for use as a microphone, the diaphragm webs are formed of PVF film and the coil is formed of 50 gauge or finer wire.

Embodiment of FIG. 8

As described with respect to the embodiment illustrated in FIGS. 1-5, the transducer of the present invention includes strips of tape 73 for damping the distortion associated with the resonant frequency of the transducer. Such a damping mechanism is effective in the lower to middle frequencies of the transducer operating range. As the operating range of the transducer approaches 20 kHz, however, material-related resonances may not be sufficiently damped, and the transducer may exhibit frequency response irregularities leading to a sound quality that is subjectively described as hard or harsh. An alternative embodiment of the present invention features a laminated diaphragm configuration that provides very effective damping in the high-frequency end of the transducer operating range to thereby eliminate the response irregularities noted above. Moreover, the laminated diaphragm of the alternative embodiment is constructed to have sufficient physical integrity to permit flat low-frequency response.

A representative portion of the laminated diaphragm 110 mentioned above is shown in cross section in FIG. 8. The diaphragm 110 includes two layers, a rigid film 112 and a fabric 114, that are bonded by an adhesive 116.

Generally, the film 112 is sufficiently rigid, when bonded to the fabric layer 114, for supporting the diaphragm webs in the cylindrical shapes described above. In the preferred embodiment, the film 112 faces outwardly.

The film 112 is selected to be a thin, low-mass material so that the diaphragm is operable in the high end of the transducer frequency range (i.e., above 10 kHz). Preferably, the rigid film 112 is formed of polyester having a thickness of approximately 1.5 mil. It is contemplated, however, that any of a number of plastic films, such as the PVF film described above, will suffice as film 112. Polyimide films, such as manufactured under the trademark KAPTON by E. I. DuPont De Nemours & Co., are also suitable for use as the rigid film 112. The thickness of the outer plastic film 112 preferably is in the range of 1 to 3 mils.

The fabric layer 114 preferably is bonded to the plastic film by a 1.5 mil. thickness of a pressure-sensitive acrylic adhesive 116. The fabric 114 provides the laminated diaphragm 110 with a high degree of internal damping for eliminating high-frequency response irregularities that may otherwise occur with a diaphragm comprising only a single plastic film. More particularly, the fabric layer 114, unlike the thin plastic film 112, has a damping characteristic that is very effective for rapidly dissipating high-frequency resonant energy in the diaphragm 110 and, consequently, for eliminating the distortion attendant with such resonance.

Preferably, the fabric layer 114 is a 3.0 mil. thickness of woven polyester cloth. The discontinuous nature of such a fabric provides the high degree of damping mentioned above. It is contemplated, however, that any of a number of fabrics (woven, felted, etc.) may

be used as the fabric layer 114. Woven polyester fabric is preferred because it is readily available and environmentally stable. The environmental stability of the polyester fabric is particularly advantageous in applications where the transducer may be exposed to frequent changes in relative humidity. Humidity changes may have deleterious effects on the laminated diaphragm performance should natural fabrics, such as cotton, be used as the fabric layer 114.

The thickness of the fabric layer is generally a function of the fineness of the weave. Finer weaves will result in thinner fabric layers 114. Generally, satisfactory performance will be achieved if the thickness of the fabric layer is between 2 and 4 mils.

The damping strips 73, discussed with respect to the embodiment of FIGS 1-5, may be attached to the laminated diaphragm 110 in order to provide the enhanced low-frequency resonance damping discussed above.

Having illustrated and described the principles of the invention in preferred and alternative embodiments, it should be apparent to those skilled in the art that the invention can be modified in arrangement and detail without departing from such principles. For example, FIG. 6 shows still another embodiment of the transducer 10 in which an additional web 96 has been added. And, as stated, FIG. 7 shows the diaphragm 98 made of PVF film in a conventional loudspeaker 100, whether of the magnetic or electrostatic type. We claim all modifications coming within the spirit and scope of the following claims.

We claim:

1. A diaphragm for an audio transducer, comprising:

a first layer; and

a second layer bonded to the first layer to form a diaphragm, the first layer being formed of a material having a first damping characteristic corresponding to the rate with which the first layer dissipates resonant energy in the diaphragm, the second layer being formed of a material having a second damping characteristic corresponding to the rate with which the second layer dissipates resonant energy in the diaphragm, the second damping characteristic being unequal to the first damping characteristic.

2. The diaphragm of claim 1 wherein the first layer is a plastic film, and wherein the second layer is a plastic fabric.

3. The diaphragm of claim 2 wherein the first layer is polyester film, and wherein the second layer is a woven polyester fabric.

4. The diaphragm of claim 2 wherein the first layer is of a thickness in the range of about 0.001 to 0.003 inches.

5. The diaphragm of claim 2 wherein the second layer is of a thickness in the range of about 0.002 to 0.004 inches.

6. The diaphragm of claim 1 wherein the first and second layer are bonded together by a pressure-sensitive acrylic adhesive.

7. A laminated transducer diaphragm comprising:

a first layer formed of a rigid film; and

a second layer formed of a fabric and bonded to the first layer.

8. The diaphragm of claim 7 wherein the film is plastic and the fabric is a woven plastic material.

9. The diaphragm of claim 8 wherein the first layer is between about 0.001 and 0.003 inches thick, and

the second layer is between about 0.002 and 0.004 inches thick.

10. The diaphragm of claim 7 wherein the first layer is formed of polyester and is between about 0.001 and 0.003 inches thick, and wherein the fabric is a woven polyester material between about 0.002 and 0.004 inches thick.

11. The diaphragm of claim 10 wherein the second layer is bonded to the first layer by a pressure-sensitive acrylic adhesive.

12. The diaphragm of claim 11 wherein the adhesive is applied to form an intermediate layer between the first and second layers, the intermediate layer being between about 0.001 and 0.003 inches in thickness.

13. A diaphragm for an audio transducer comprising:

a first layer having a first damping characteristic corresponding to the rate at which the first layer dissipates resonant energy in the diaphragm;

a second layer having a second damping characteristic corresponding to the rate at which the second layer dissipates resonant energy in the diaphragm;

the first and second damping characteristics being of different magnitudes; and

fastening means for fastening the first layer to the second layer for movement therewith to form a diaphragm.

14. The diaphragm of claim 1 wherein the fastening means includes an adhesive for bonding the first and second diaphragms together.

15. The diaphragm of claim 14 further including frame means for supporting the diaphragm in a manner such that the diaphragm has a radius of curvature.

16. The diaphragm of claim 15 wherein the first layer is formed of a rigid film and the second layer is formed of a fabric.

17. The diaphragm of claim 16 wherein the first layer faces outwardly and the second layer faces inwardly.

18. An audio transducer diaphragm assembly, comprising:

a first part being curved between two end portions and having a central portion;

a second part being curved between two end portions and having a central portion, the central portion of the first part being joined to the central portion of the second part; and

the first and second parts being formed to have attached first and second layers, the first layer being formed of material having a first damping characteristic corresponding to the rate with which the first layer dissipates resonant energy in the diaphragm, the second layer being formed of material having a second damping characteristic corresponding to the rate with which the second layer dissipates resonant energy in the diaphragm, the first and second damping characteristics being of different magnitudes.

19. The assembly of claim 18 further including support means for supporting the first and second parts with the joined central portions in substantially planar orientation and with the end portions of the first and second parts curved into a arcuate configuration.

FIG. 1

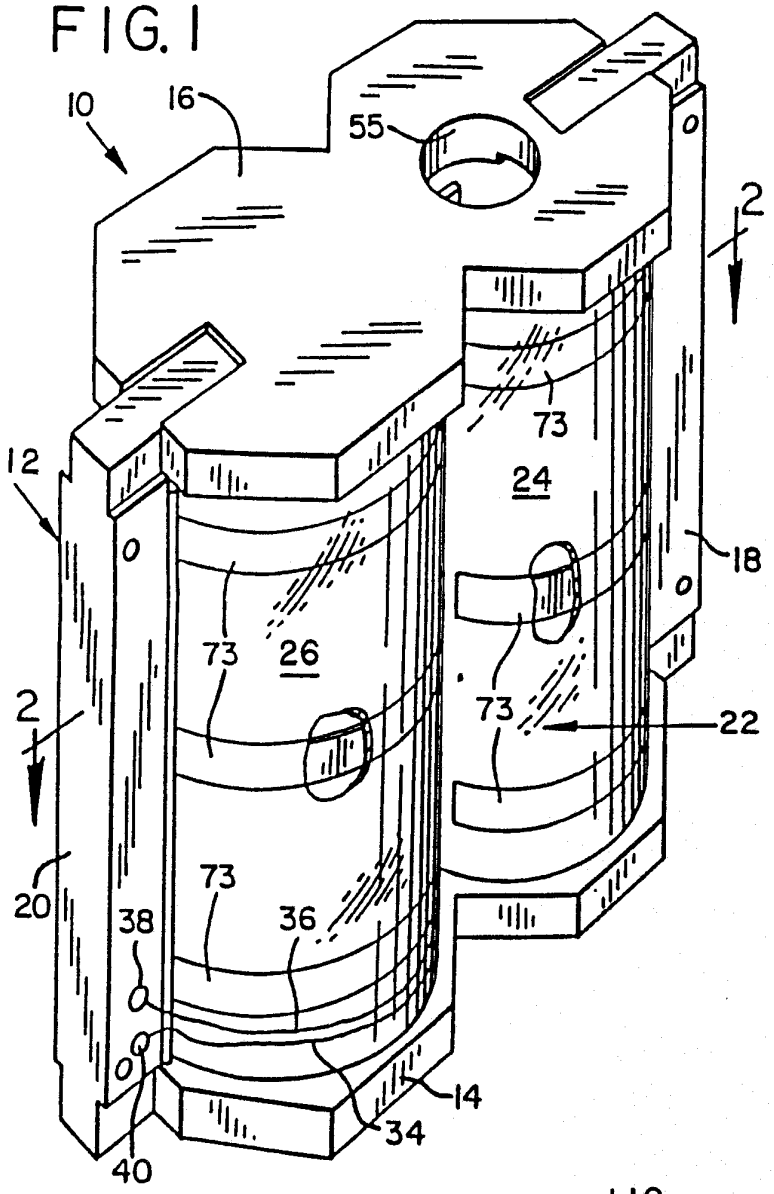

FIG. 7

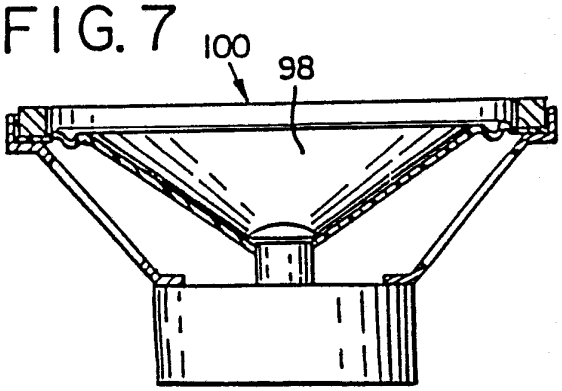

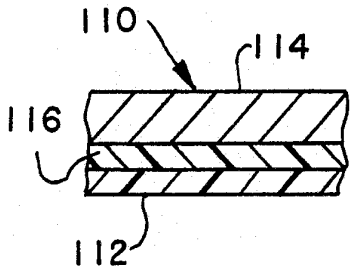

FIG. 8

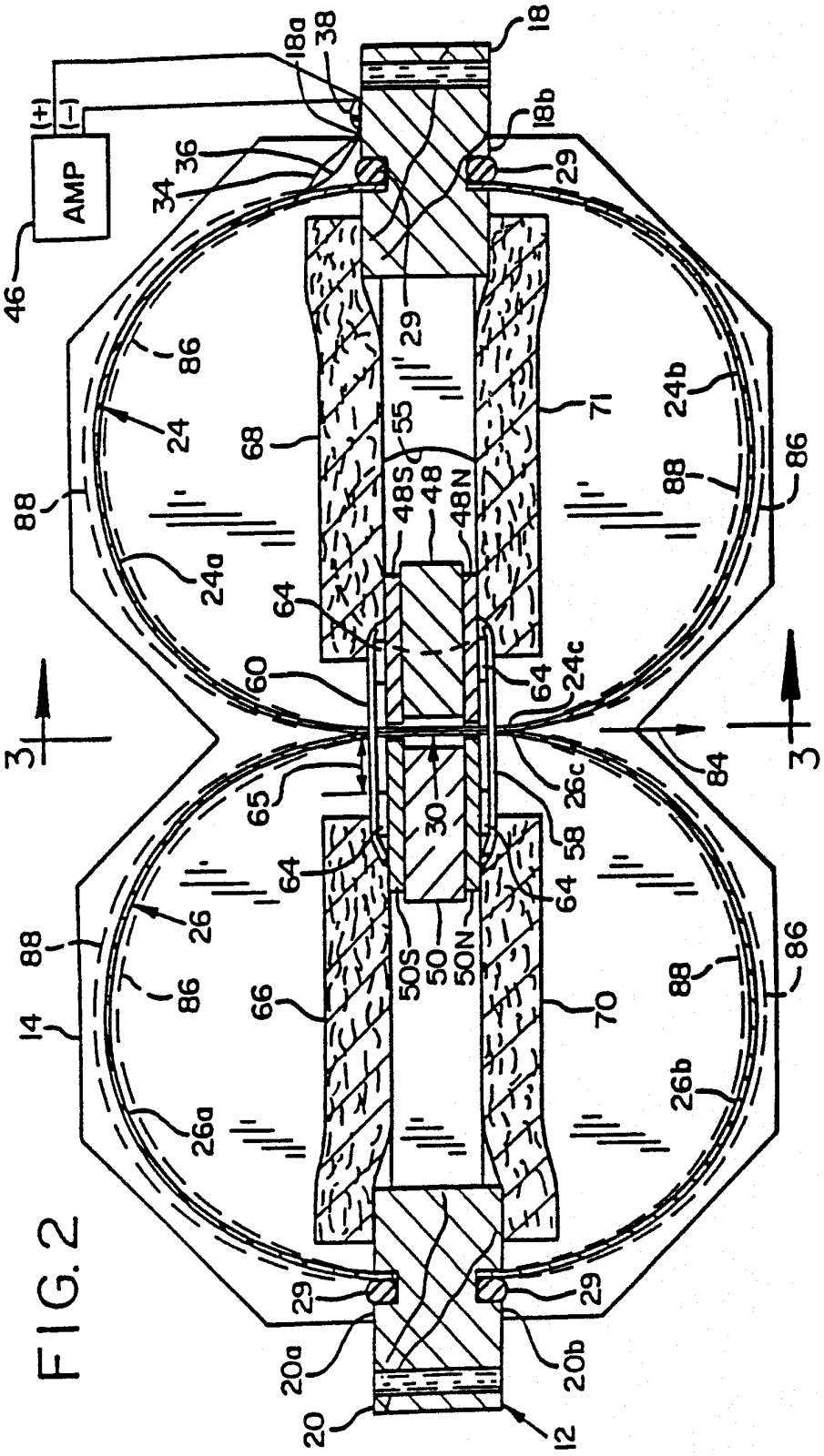
AMP
(+)
(-)
46
18a
38
18
18b
36
34
29
86
24
88
24a
24b
68
55
48S
48
48N
71
64
60
24c
3
65
30
26c
58
84
26
14
66
50S
50
50N
70
26a
26b
20a
20b
20
12

FIG. 2

FIG. 3

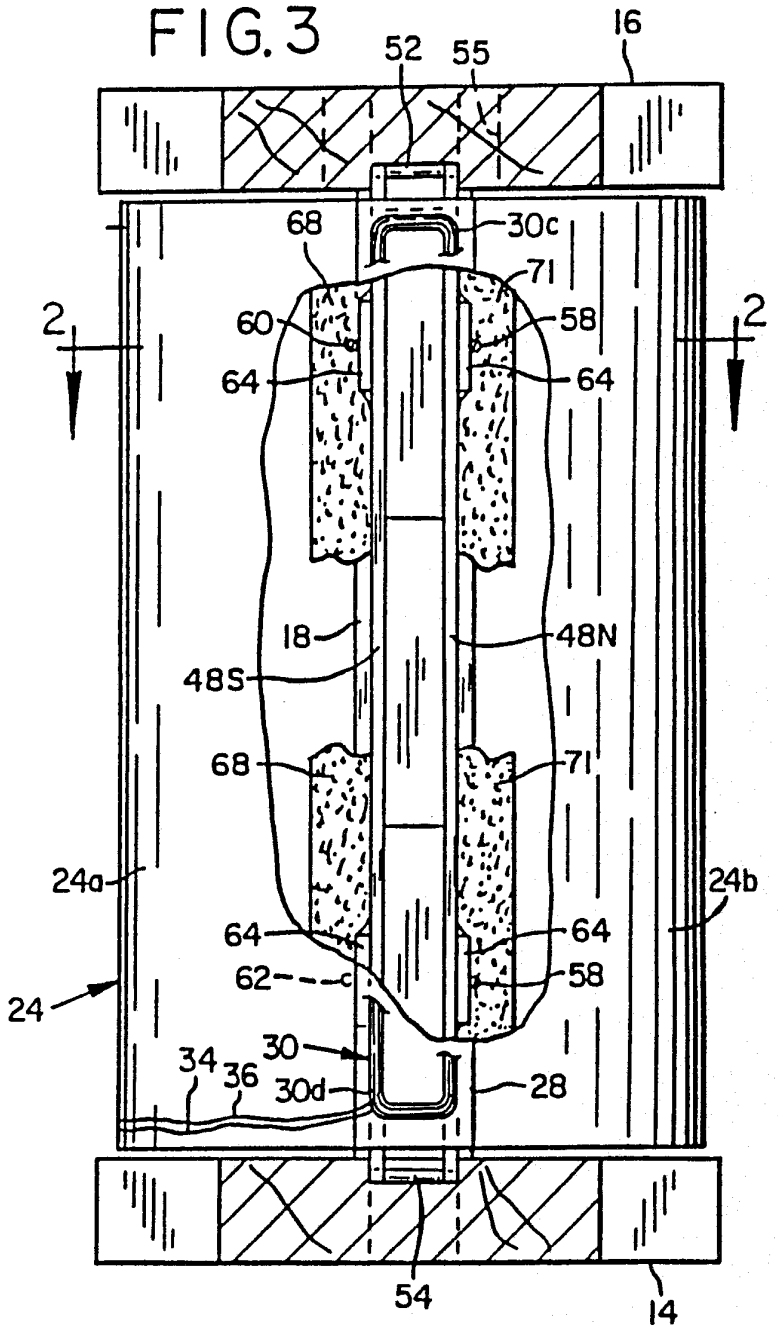
52
55
16
68
30c
71
2
60
58
2
64
64
18
48N
48S
68
71
24a
24b
64
64
62
58
24
30
34
36
30d
28
54
14

FIG. 4

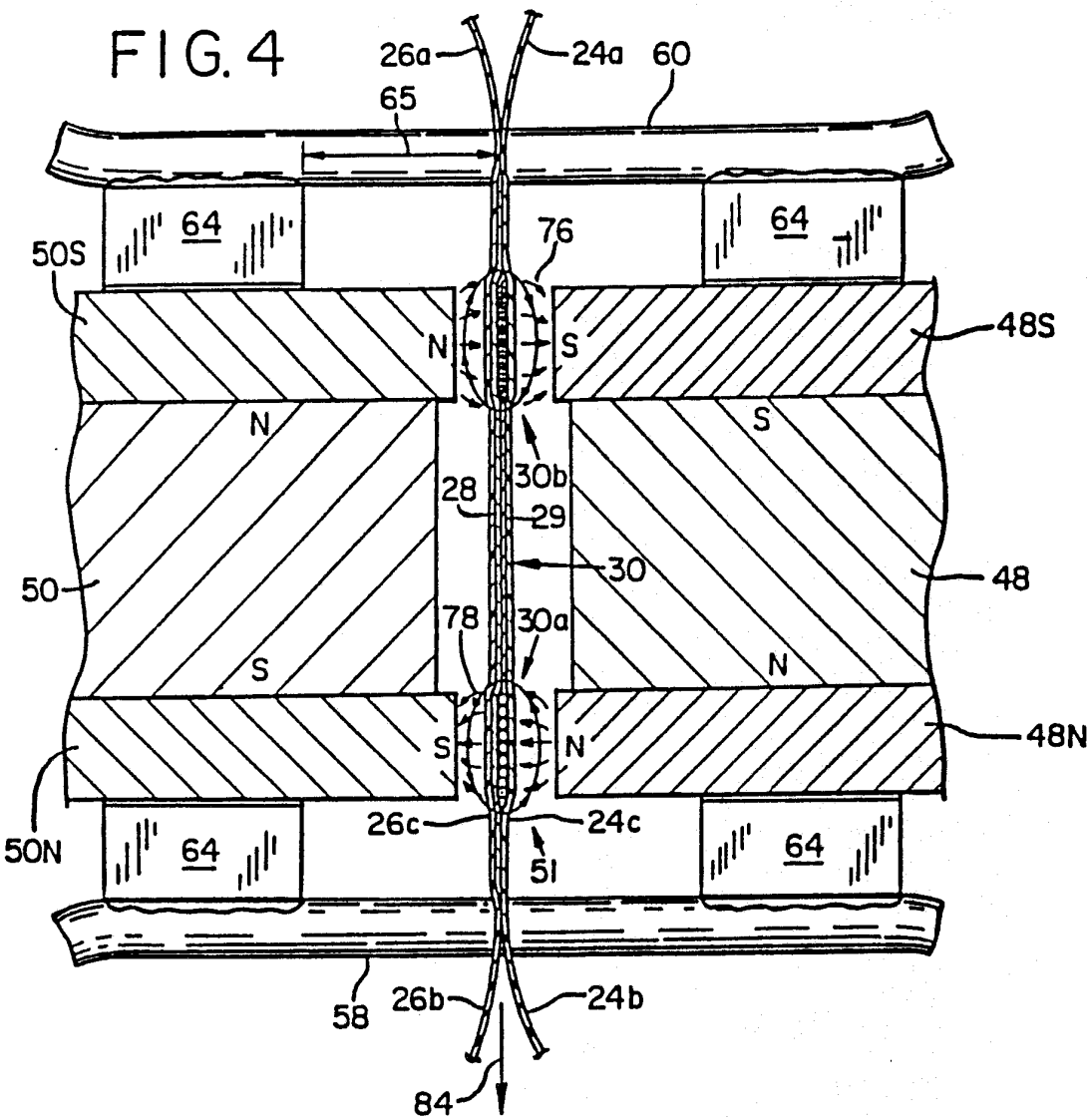
26a
24a
60
65
64
64
50S
76
48S
N
S
N
S
30b
28
29
30
50
48
78
30a
S
N
48N
S
N
50N
26c
24c
64
64
51
58
26b
24b
84

FIG. 5

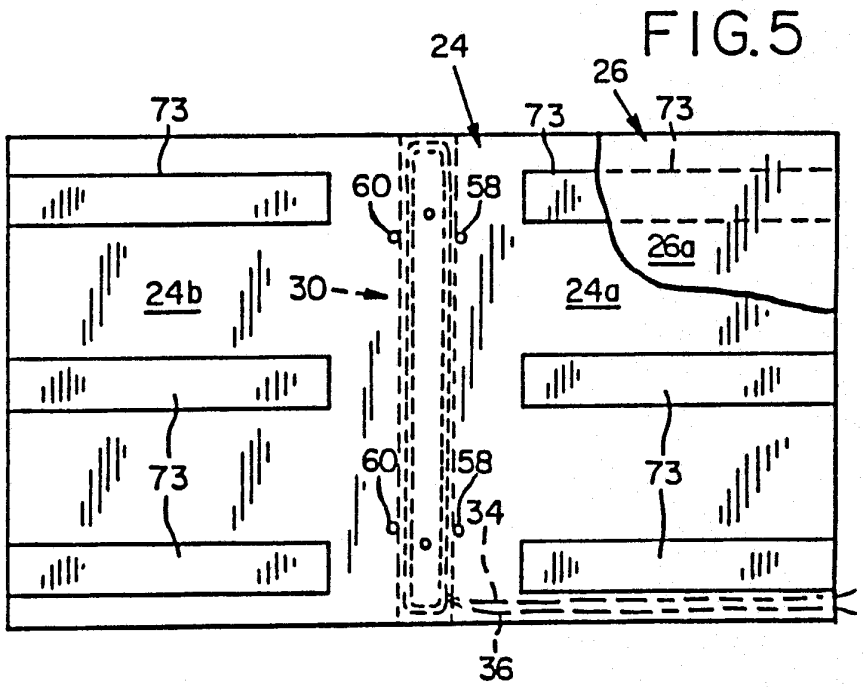
24
26
73
73
73
60
58
26a
24b
30
24a
73
60
58
73
34
36

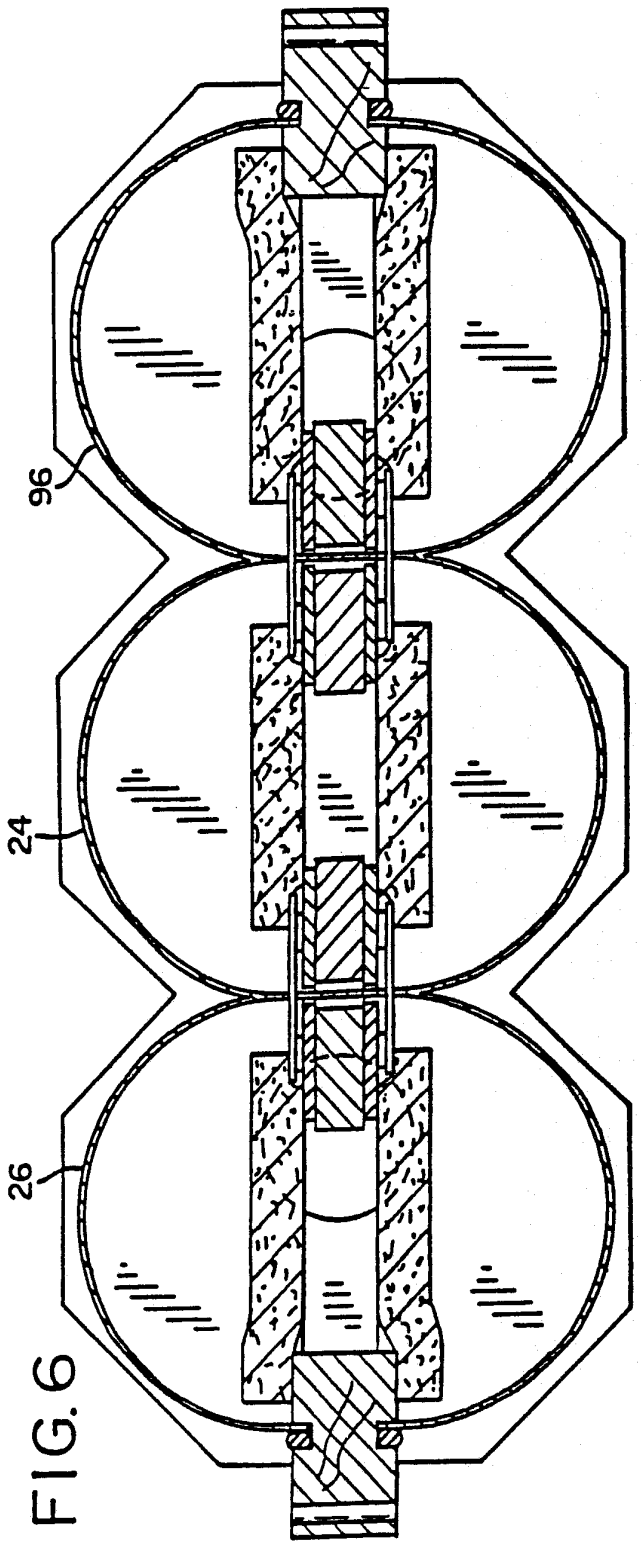

FIG. 6

INTERNATIONAL SEARCH REPORT

International Application No PCT/US90/06643

I. CLASSIFICATION OF SUBJECT MATTER (if several classification symbols apply, indicate all) [3]

According to International Patent Classification (IPC) or to both National Classification and IPC

IPC(5): G10K 13/00
US CL.: 181/166

II. FIELDS SEARCHED

Minimum Documentation Searched [4]

Classification System	Classification Symbols
US	181/153,163,164,165,166,167,170,171,172,173

Documentation Searched other than Minimum Documentation to the Extent that such Documents are Included in the Fields Searched [5]

III. DOCUMENTS CONSIDERED TO BE RELEVANT [14]

Category *	Citation of Document, [16] with indication, where appropriate, of the relevant passages [17]	Relevant to Claim No. [18]
X Y	US, A, 4,076,098 28 February 1978 (WARD) See entire document.	1,2,7,8,13 4,5,9,10,18,19
Y	US, A, 4,554,650 19 November 1985 (BROWN et al.) See column 3, lines 28-31.	3
Y	US, A, 1,788,385 13 January 1931 (DUFFY) See entire document.	18,19
Y	US, A, 1,638,245 09 August 1927 (DAVIS) See entire document.	18,19
Y	US, A, 1,821,469 01 September 1931 (HICKS) See entire document.	18,19

* Special categories of cited documents: [15]

"A" document defining the general state of the art which is not considered to be of particular relevance

"E" earlier document but published on or after the international filing date

"L" document which may throw doubts on priority claim(s) or which is cited to establish the publication date of another citation or other special reason (as specified)

"O" document referring to an oral disclosure, use, exhibition or other means

"P" document published prior to the international filing date but later than the priority date claimed

"T" later document published after the international filing date or priority date and not in conflict with the application but cited to understand the principle or theory underlying the invention

"X" document of particular relevance; the claimed invention cannot be considered novel or cannot be considered to involve an inventive step

"Y" document of particular relevance; the claimed invention cannot be considered to involve an inventive step when the document is combined with one or more other such documents, such combination being obvious to a person skilled in the art.

"&" document member of the same patent family

IV. CERTIFICATION

Date of the Actual Completion of the International Search [2]: 29 JANUARY 1991

Date of Mailing of this International Search Report [2]: 01 APR 1991

International Searching Authority [1]: ISA/US

Signature of Authorized Officer [20]: BRIAN W. BROWN

FURTHER INFORMATION CONTINUED FROM THE SECOND SHEET

V. ☒ OBSERVATIONS WHERE CERTAIN CLAIMS WERE FOUND UNSEARCHABLE [1]

This international search report has not been established in respect of certain claims under Article 17(2) (a) for the following reasons:

1. ☐ Claim numbers , because they relate to subject matter [1] not required to be searched by this Authority, namely:

2. ☒ Claim numbers 14-17, because they relate to parts of the international application that do not comply with the prescribed requirements to such an extent that no meaningful international search can be carried out [1], specifically:

These claims refer to structural features not set forth in independent claim 1 in which claims 14-17 depend.

3. ☐ Claim numbers_____, because they are dependent claims not drafted in accordance with the second and third sentences of PCT Rule 6.4(a).

VI. ☐ OBSERVATIONS WHERE UNITY OF INVENTION IS LACKING [2]

This International Searching Authority found multiple inventions in this international application [illegible] follows:

1. ☐ As all required additional search fees were timely paid by the applicant, this international search report cover [illegible] searchable claims of the international application.

2. ☐ As only some of the required additional search fees were timely paid by the applicant, this international [illegible] only those claims of the international application for which fees were paid, specifically claims:

3. ☐ No required additional search fees were timely paid by the applicant. Consequently, this international se[illegible] the invention first mentioned in the claims; it is covered by claim numbers:

4. ☐ As all searchable claims could be searched without effort justifying an additional fee, the International Searching Auth[illegible] invite payment of any additional fee.

Remark on Protest

☐ The additional search fees were accompanied by applicant's protest.

☐ No protest accompanied the payment of additional search fees.