April 11, 1950 A. H. MOORE 2,503,287

ROTARY SWITCH CONTROL FOR FLASHLIGHTS

Filed March 9, 1946

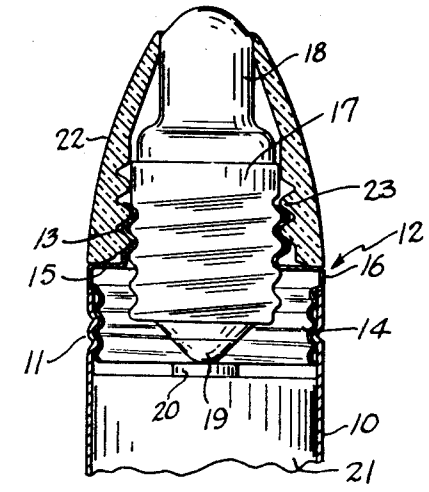

Fig. 1.

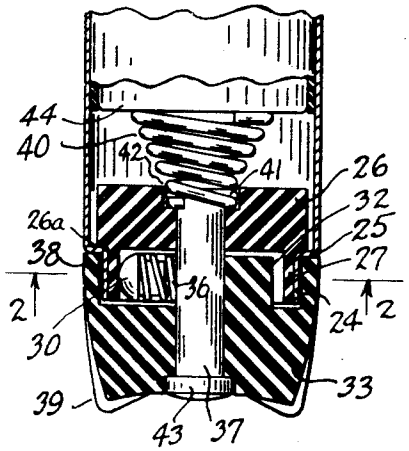

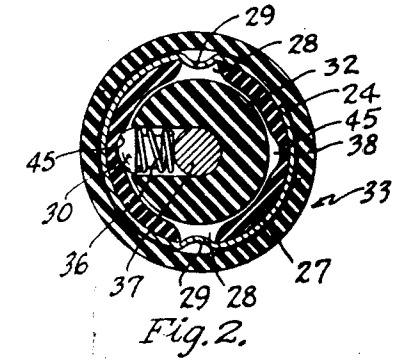

Fig. 2.

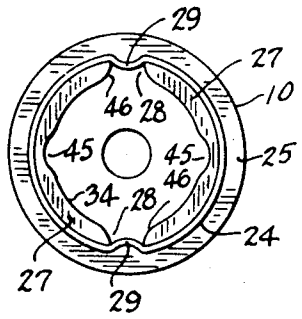

Fig. 4.

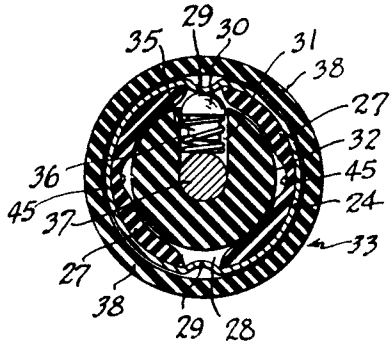

Fig. 3.

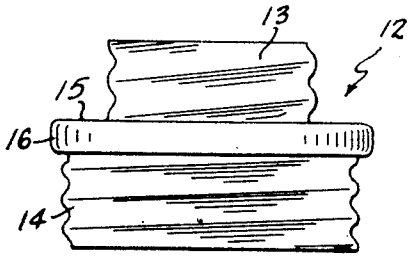

Fig. 5.

INVENTOR
Arthur H. Moore
BY
Webster & Davis
ATTORNEYS.

Patented Apr. 11, 1950

2,503,287

UNITED STATES PATENT OFFICE

2,503,287

ROTARY SWITCH CONTROL FOR FLASHLIGHTS

Arthur H. Moore, Fairfield, Conn., assignor to The Bridgeport Metal Goods Manufacturing Company, Bridgeport, Conn., a corporation of Connecticut

Application March 9, 1946, Serial No. 653,339

14 Claims. (Cl. 200—60)

1

This invention relates to a flash light, more particularly to the smaller type flash lights which are adapted to be carried in the pocket like a fountain pen and known as pen lights, but it is of course not limited to this type of flash light.

It has for an object to provide an improved mounting for mounting the light bulb so that a solid support for the bulb is provided, with no springs, and good electrical contact is always maintained.

Another object is to provide an improved switch control for this type of light, and especially a rotary switch control which can be operated and will function equally well when rotated in either direction.

A further object is to provide an improved means of assembly of the switch elements together with an improved means for mounting the battery grounding spring.

With the foregoing and other objects in view, I have devised the construction illustrated in the accompanying drawing forming a part of this specification. It is, however, to be understood the invention is not limited to the specific details of construction and arrangement shown, but may embody various changes and modifications within the scope of the invention.

In this drawing:

Fig. 1 is a longitudinal section of a pen light on an enlarged scale showing my improved construction and arrangement;

Fig. 2 is a transverse section substantially on line 2—2 of Fig. 1, and showing the switch in the "off" position;

Fig. 3 is a similar view showing the switch in the "on" position;

Fig. 4 is a view looking at the lower end of the casing, with the inner switch body in position, but with the outer operating knob removed, and

Fig. 5 is a side elevation of the improved bulb holder.

The construction shown comprises a tubular metal body or casing 10 open at its opposite ends and provided with screw threads rolled in at one end, as indicated at 11. Mounted in this threaded end is the improved bulb holder 12 comprising a metal sleeve including two portions 13 and 14 of different diameters connected by an intermediate transverse inwardly extending wall or shoulder 15, and there may be a short cylindrical portion 16 below this shoulder on the larger portion 14 between the screw threads and the wall 15, which is of substantially the same outer diameter as the outer diameter of the body 10, so that when this holder is mounted in the body they

2

form a continuous outer surface. The larger portion 14 is provided with screw threads to fit within the threads 11 of the body. The smaller portion 13 is also provided with screw threads to receive the threaded metal shell contact 17 of the lamp bulb 18, in such position that the central lamp contact 19 may engage the central lamp contact 20 of the battery 21. The bulb may also be enclosed by a plastic lens 22 made of any suitable material, preferably of molded plastic of transparent, semi-transparent, translucent or opaque material, as desired, which forms a protection for the lamp bulb. At its larger end it is of the same diameter as the body 10 and the outer surface is preferably curved upwardly and inwardly from this larger end to substantially blend into the curvature of the end of the light bulb to provide a continuous outer surface which will not catch on other objects, will protect the lamp bulb and will give an attractive appearance. This lens is provided with screw threads 23 at the inner side of the larger end portion to thread onto the outer side of the smaller portion 13 of the bulb holder.

It will be apparent from this mounting of the bulb that the screw shell contact 17 of the lamp bulb is grounded on the metal body 10, and also that this holder provides a solid support for the lamp bulb and maintains good electrical contact, both on the shell contact 17 and the central contact 19 with the battery contact 20, and that no springs are required in mounting it, which are apt to be displaced when assembled, and permit the lamp bulb to get out of position so that good electrical contact is not always assured, either with the battery contact or to the bulb shell contact.

The switch control for the lamp bulb is mounted at the opposite end of the body 10, and in this arrangement there are no projecting switch or other elements on the side of the body. In this switch construction the end portion of the body 10 is reduced in diameter, as indicated at 24, forming an inwardly directed shoulder 25 spaced the desired distance from the end of the body. Mounted within the body 10 is a switch body 26 of molded insulating plastic material which has projecting from its outer or lower side a substantially cylindrical sleeve-like portion 27 which telescopes with the reduced portion 24 of the metal body 10. In the opposite sides of this sleeve-like portion 27 is formed a pair of longitudinal slots 28 through the portion, and the reduced portion 24 of the metal body is provided with a pair of inwardly directed longitudinal beads 29 which extend into the slots 28 and are

seated therein. These beads cooperating with the sides of the slots hold the switch body 26 against turning in the metal body, and also the beads 29 form stationary switch contacts which cooperate with the movable switch contact 30.

This movable switch contact 30 is mounted in a recess 31 extending laterally through the side of a cylindrical boss 32 on the inner side of a molded plastic insulating switch knob 33, and this contact 30 has a rounded outer end running on the inner surface 34 of the cylindrical portion 27 of the insulating switch body 26. This rounded contact has a stem 35 of somewhat smaller diameter than the head portion 30 which is embraced by a coil spring 36 engaging at its inner end the metal assembly rivet 37 to form good electrical connection between the contact 30 and the rivet 37, and also to tend to force the movable contact 30 outwardly to maintain it against the inner wall 34 of the switch body 26, or against the stationary contacts 29. This insulating switch knob 33 includes an outer skirt portion 38 telescoping on the outer side of the reduced portion 24 of the metal body 10, and preferably of an outer diameter substantially equal to that of the body 10 to form a continuous surface therewith, and this knob may be provided with ribs 39, giving a good grip for imparting turning movements to this knob.

It will be seen from Fig. 1 that when assembled, the shoulder 26a on the outer side of the body 26 and the end of the skirt 38 of the knob 33 are located on opposite sides of the shoulder 25 of the metal body 10, and as the members 26 and 33 are connected together by the rivet 37, the parts are retained in the body 10 and in proper position by the shoulder 25. The body 26 is inserted from the opposite end of the casing 10, then the knob 33 is placed in position, and the rivet 37 is inserted through the central openings in the two molded plastic members 26 and 33. Then the smaller lower end of the battery grounding spring 40 is placed over the inner end of the rivet 37 and this rivet end turned or riveted over, as indicated at 41, both over the end coil of the spring and the bottom of the recess 42 in the body 26. This, in combination with the head 43 seating in a recess in the outer end of the knob 33, assembles all parts by a single element, that is, the rivet 37, and permits turning of the hand knob 33 for operating the switch to open and close the circuit through the lamp. It will be apparent that when one or more cells of the battery 21 are in position, the lower exposed or shell contact 44 is in contact with the spring 40 and this spring retains the central battery contact 20 in engagement with the central lamp contact 19. Thus the rivet 37 and the movable contact 30 are in electrical connection with the battery shell 44. Therefore, when the contact 30 is in engagement with either of the beads or the stationary contact 29, this battery shell contact 44 is grounded on the metal body 10 and the circuit is completed through the lamp bulb 18. By turning the knob 33 a short distance in either direction, the contact 30 is moved away from engagement with the contact bead 29 onto the inner surface 34 of the insulating body 26, thus opening the circuit. It is preferred to provide in the inner surface 34 a pair of recesses or depressions 45 about half way between the contacts 29, so that when the switch knob is in the intermediate or "off" position this contact 30 seats in one of these recesses and holds the contact knob against inadvertent or accidental operation to close the switch when the flash light is being carried in a pocket, handbag or other device. It also provides a "feel" for the operation of the hand knob so the operator can tell when the switch is in the "off" position. It is preferred that the beads 29 forming the stationary contacts do not extend the full thickness of the cylindrical walls 27 of the switch body, and that the opposite sides of these slots 28 be rounded, as indicated at 46, so that in effect a recess similar to the recesses 45 is formed at the stationary contact to cooperate with the rounded movable contact 30 to yieldingly retain the switch in the circuit closing position, but will yield to permit opening of the circuit and will give a similar "feel" to the operator to show when the switch is in the proper "on" position. Although the switch contact 30 is shown as a semispherical member with a cylindrical stem 35, this could, if desired, be a ball seating in the end of the spring 36 and operating in the same manner.

It will be seen from the above that there are no projections on the outer surface of this flash light, and that it is of extremely simple construction. The single riveting over of the inner end 41 of the rivet 37 assembles and connects all the switch parts, including the battery grounding spring 40, in this one operation. It will also be seen that the switch operating hand knob 33 may be operated equally well in either direction to open or close the switch, and that with this construction and arrangement portions of the enclosing metal body or casing 10 are used as the stationary contacts of the switch.

Having thus set forth the nature of my invention, I claim:

1. A device of the character described comprising a tubular metal body adapted to enclose a battery and open at one end, a control switch mounted in said open end of the body comprising a hollow insulating switch body telescoping said metal body and embraced and supported thereby, said switch body being provided with a slot in one side through which a portion of the telescoping metal body is exposed, an insulating switch knob secured to and mounted to turn relative to the switch body and including an exposed portion forming a hand grip for operating the switch, a spring pressed switch contact carried by the knob adapted in one position of the knob to engage said exposed portion of the metal body and in other positions separated from the metal body by the switch body, and means for elecrically connecting the switch contact with the battery shell.

2. A device of the character described comprising a tubular body adapted to enclose a battery, a control switch at one end of the body comprising an insulating switch body including a sleeve portion telescoped in and embraced by the tubular body and provided with a recess in one side, a switch contact in said recess adapted to be electrically connected with one contact of the battery, an insulating switch knob secured to and mounted to turn in the switch body and including an exposed portion forming a hand grip for operating the switch, a spring pressed switch contact mounted in said knob and running on the inner wall of said sleeve portion of the switch body in position to engage the first switch contact in a given position of the knob, and means for electrically connecting the spring pressed contact with the other battery contact.

3. A device of the character described comprising a tubular metal body adapted to enclose a

battery, a control switch at one end of the body comprising an insulating switch body mounted in and embraced by the metal body and including a substantially cylindrical sleeve portion provided with a recess, a switch contact in said recess grounded on the metal body, an insulating switch knob connected to the switch body including a portion extending into said sleeve portion and an exposed portion forming a hand grip for operating the switch, a spring adapted to engage a battery contact, a rivet connecting the knob to the switch body for turning movements and also securing said spring to the switch body, and a spring pressed switch contact carried by the knob electrically connected with said rivet and running on the inner wall of the sleeve portion of the switch body in position to engage the grounded switch contact in a given position of the knob.

4. A device of the character described comprising a tubular body adapted to enclose a battery, a control switch at one end of the body comprising an insulating switch body including a sleeve portion enclosed in said tubular body provided with a recess in one side, a switch contact in said recess adapted to be electrically connected with a battery contact, an insulating switch knob forming a hand grip for operating the switch and including a portion extending into and telescoped with said sleeve portion, a central rivet connecting the knob to the switch body for turning movements therein, a spring adapted to be electrically connected with the other battery contact and mounted on the switch body by said rivet, and a spring pressed switch contact electrically connected with said rivet mounted in the knob and running on the inner wall of the sleeve portion of the switch body in position to engage said first switch contact in a given position of the knob.

5. A device of the character described comprising a tubular metal body adapted to enclose a battery, said body being reduced at one end providing an inwardly extending shoulder adjacent this end, a control switch comprising an insulating body enclosed in said metal body seating against said shoulder, an insulating switch knob forming a hand grip for operating the switch, a rivet connecting the knob to the switch bory for turning movements relative to the switch body and the tubular body, a spring adapted to engage a battery contact and mounted on the switch body by said rivet, a stationary contact in the switch body grounded on the metal body, and a movable contact electrically connected with the rivet, said movable contact being carried by the knob and movable with it to and from engagement with the stationary switch contact by turning movements of the knob.

6. A device of the character described comprising a tubular metal body adapted to enclose a battery, said body being reduced at one end providing an inwardly extending shoulder adjacent this end, a control switch comprising an insulating body member enclosed within the metal body and an insulating knob, said insulating body member and the knob being located on opposite sides of said shoulder, a rivet connecting said switch body and knob together to retain the switch in the metal body and with the switch body within the metal body at the inner side of the shoulder, said knob being mounted for turning movement on the rivet and exposed at the end of the metal body to form a hand grip for operating the switch, stationary and movable contacts in the switch body and knob respectively

brought to and from engagement by movement of the movable contact with the knob through turning movements of the knob, said stationary contact being grounded on the metal body, and means for connecting the movable contact with the battery shell.

7. A device of the character described comprising a tubular metal body adapted to enclose a battery, said body being reduced at one end providing an inwardly extending shoulder adjacent this end, a control switch comprising an insulating body within and enclosed by the tubular body on the inner side of said shoulder and an insulating knob on the outer side of the shoulder providing a hand grip for operating the switch, a rivet connecting said switch body and knob to secure the switch in the metal body and permit turning movements of the knob relative to the insulating body and the metal body, a spring adapted to engage the battery shell and secured to the switch body by said rivet, a stationary switch contact in the switch body grounded on the metal body, and a movable contact carried by the knob so as to move with it and be shifted to and from engagement with the stationary contact by movements of the knob and electrically connected with the rivet.

8. A device of the character described comprising a tubular metal body adapted to enclose a battery, said body being reduced at one end to provide an inwardly extending shoulder spaced inwardly from said end and provided with an inwardly directed bead in said reduced portion between the shoulder and the end of the body, a control switch comprising an insulating body enclosed within the tubular body at the inner side of said shoulder and including a sleeve-like portion provided with an opening in which the bead is located, an insulating knob at the outer side of the shoulder including an exposed hand grip for operating the switch, means connecting the knob to the switch body for turning movements relative to said body and the tubular body, a spring pressed contact carried by the knob running on the inner wall of said sleeve-like portion and movable to and from engagement with the bead by turning movements of the knob, and means for electrically connecting said movable contact with the battery shell.

9. A device of the character described comprising a tubular metal body adapted to enclose a battery, said body being reduced at one end providing an inwardly extending shoulder spaced inwardly from one end, said reduced portion being provided with spaced inwardly directed beads between the shoulder and the end of the body, a control switch comprising an insulating body mounted within the tubular body at the inner side of said shoulder including a substantially cylindrical sleeve portion extending through said shoulder and provided with spaced openings in which said beads are located, an insulating knob mounted for turning movements on said switch body outside said shoulder and including an exposed hand grip for operating the switch, a rounded spring pressed contact carried by the knob and running on the inner wall of said sleeve portion to and from engagement with the beads by turning movements of the knob, the inner wall of said sleeve being provided with recesses between the beads to receive said rounded contact and releasably retain it in the intermediate positions, and means electrically connecting the movable contact with the battery shell.

10. A device of the character described com-

prising a tubular metal body adapted to enclose a battery, said body being reduced in diameter for a portion of its length at one end providing an annular shoulder, said reduced portion being provided with inwardly directed beads at opposite sides thereof, a control switch comprising an insulating body including a body portion mounted within the metal body at the inner side of said shoulder and a reduced substantially cylindrical sleeve-like portion telescoped into the reduced portion of the metal body, said sleeve-like portion being provided with openings therethrough in which the beads are located, an insulating knob embracing the reduced portion of the metal body and including a boss located within the said sleeve-like portion of the insulating body, said knob also including an exposed portion providing a hand grip for operating the switch, a rivet connecting the switch body and the knob to retain said parts in the metal body and permit turning movements of the knob relative to the switch body and tubular body, means for electrically connecting the rivet with the battery shell, and a rounded spring pressed contact electrically connected with the rivet, said latter contact being carried by the knob and running on the inner surface of said sleeve-like portion to and from engagement with the beads by turning movements of the knob.

11. A device of the character described comprising a tubular metal body adapted to enclose a battery, said body being reduced in diameter for a portion of its length at one end providing an annular shoulder, said reduced portion being provided with inwardly directed longitudinal beads at opposite sides thereof, a control switch comprising an insulating body including a body portion mounted within the metal body at the inner side of said shoulder and a reduced substantially cylindrical sleeve-like portion extending into the reduced portion of the metal body, said sleeve-like portion of the insulating body being provided with spaced longitudinal slots through it in which said beads are located, an insulating knob embracing the metal portion of the metal body on the outer side of said shoulder and including a central boss extending into said sleeve-like portion of the insulating body, said knob also including an exposed portion forming a hand grip for operating the switch, a rivet connecting the knob to the switch body for turning movements relative to the switch body and metal body, means for electrically connecting the rivet with the battery shell, and a rounded spring pressed contact mounted in said boss of the knob to run on the inner surface of the sleeve-like portion of the insulating body to and from engagement with the beads by turning movements of the knob and electrically connected with the rivet.

12. A device of the character described comprising a control switch including an insulating switch body including a sleeve portion provided with a recess in one side, a switch contact in said recess, means for connecting said contact with one side of an electric circuit, an insulating switch knob including a portion extending into said sleeve portion and an outer exposed portion forming a hand grip for operating the switch, a rivet connecting the knob to the switch body for turning movements relative to said body, an electrical connection adapted to be connected to the other side of said circuit and secured to the switch body by said rivet, and a spring pressed switch contact carried by the knob electrically connected with said rivet and by turning movement of the knob running on the inner wall of the sleeve portion of the switch body in position to engage the first switch contact in a given position of the knob.

13. A device of the character described comprising a metal support including a tubular portion reduced adjacent one end providing an inwardly extending shoulder spaced inwardly from said end of said portion, said reduced portion being provided with an inwardly directed bead between the shoulder and said end, a control switch comprising an insulating body at one side of said shoulder and including a sleeve-like portion located in the reduced portion of the metal support provided with an opening in which the bead is located to form a switch contact, an insulating knob at the other side of the shoulder including an exposed portion forming a hand grip for operating the switch, means connecting the knob to the body for turning movements, a spring pressed contact carried by the knob and by movements of said knob running on the inner wall of said sleeve-like portion and movable to and from the bead by turning movements of the knob, and means for electrically connecting said contacts in an electric circuit.

14. A device of the character described comprising a metal support including a tubular portion reduced at one end to provide an inwardly extending shoulder spaced inwardly from one end of said portion, said reduced portion being provided with an inwardly directed bead between the shoulder and said end, a control switch comprising an insulating body within the support at one side of said shoulder including a substantially cylindrical sleeve portion extending through said shoulder and provided with an opening receiving said bead, an insulating knob mounted for turning movements on said switch body on the other side of said shoulder and including an exposed portion forming a hand grip for operating the switch, a rounded spring pressed contact carried by the knob and by movements of said knob relative to the insulating body and metal support running on the inner wall of said sleeve portion to and from engagement with the bead by turning movements of the knob, the inner wall of said sleeve portion being provided with a recess spaced laterally from the bead to receive said rounded contact and releasably retain it in the separated position, and means for electrically connecting the switch contacts in an electric circuit.

ARTHUR H. MOORE.

REFERENCES CITED

The following references are of record in the file of this patent:

UNITED STATES PATENTS

Number	Name	Date
864,957	Dickens	Sept. 3, 1907
1,102,757	Joyce	July 7, 1914
1,439,404	Cotharin	Dec. 19, 1922
1,987,158	Quaglia	Jan. 8, 1935
2,225,936	Williams	Dec. 24, 1940
2,256,641	Fullmer	Sept. 23, 1941
2,358,867	Madan	Sept. 26, 1944

FOREIGN PATENTS

Number	Country	Date
423,957	Great Britain	Sept. 22, 1933