Sept. 2, 1952 J. LA CESA 2,609,163

COIL WINDING APPARATUS

Filed Feb. 19, 1948 4 Sheets-Sheet 1

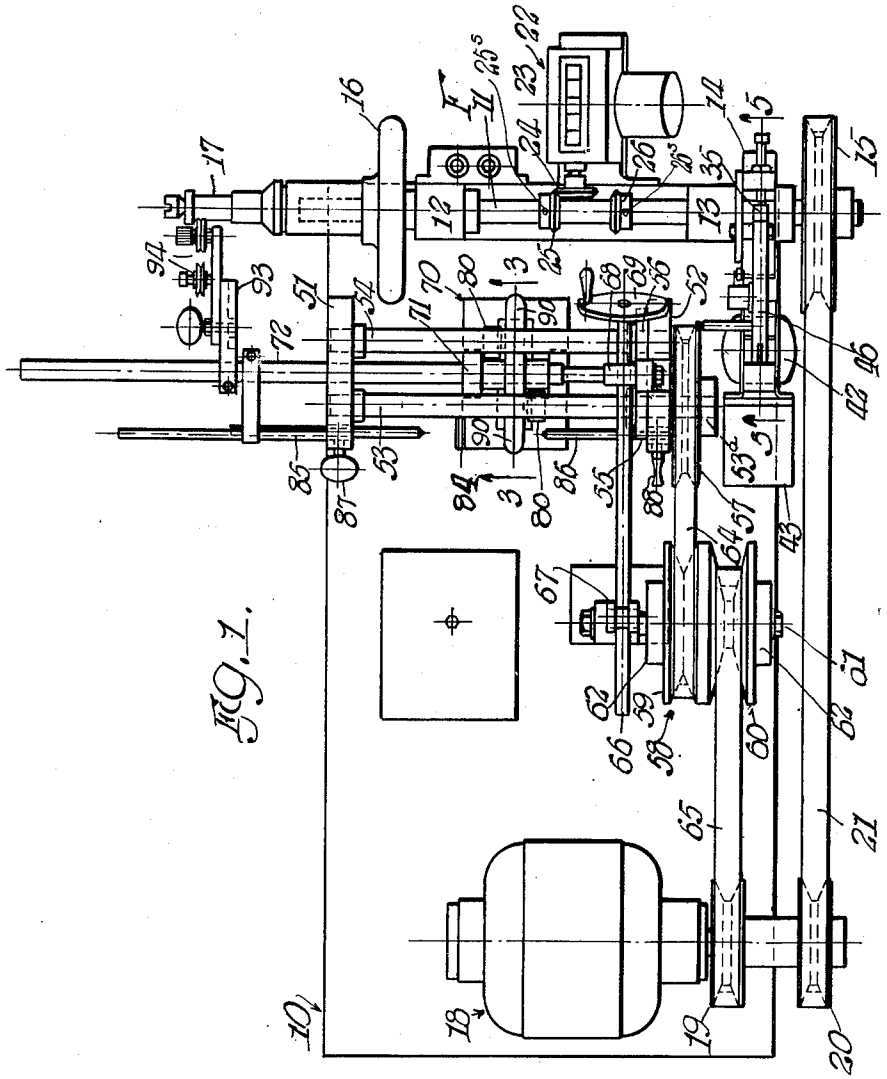

FIG. 1.

Inventor
Joseph La Cesa
by Arthur M. Nelson
Atty

Sept. 2, 1952 J. LA CESA 2,609,163

COIL WINDING APPARATUS

Filed Feb. 19, 1948 4 Sheets-Sheet 2

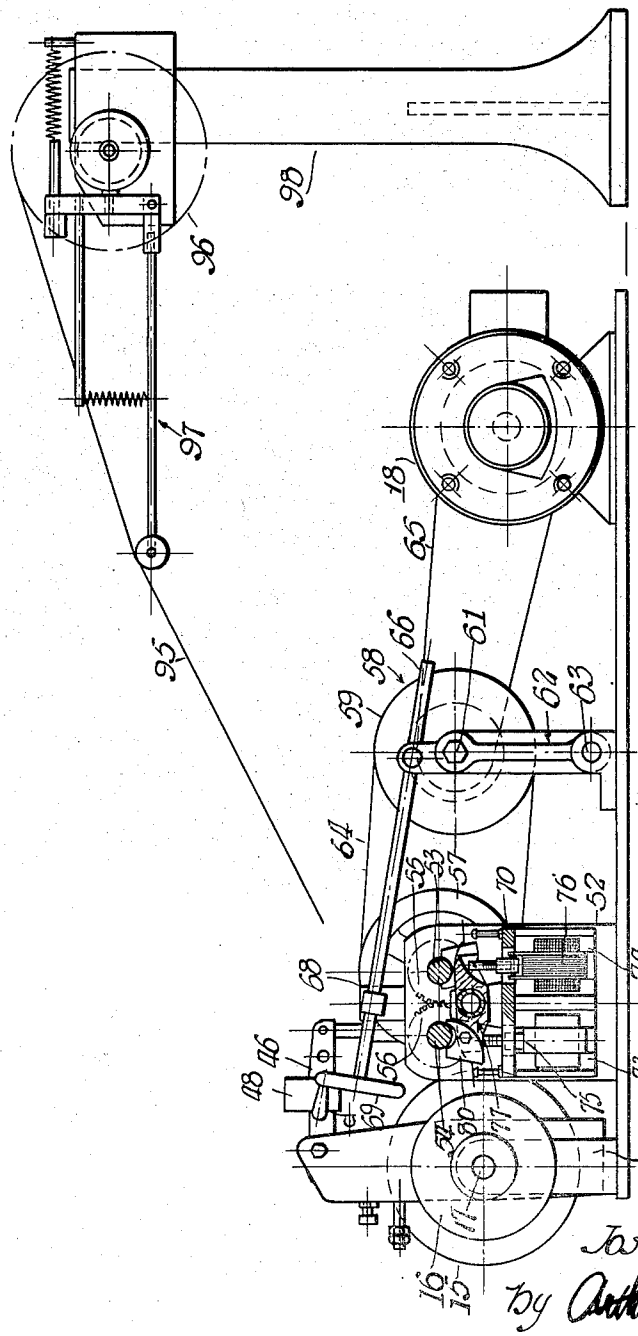

Fig. 2.

Inventor
Joseph La Cesa
by Arthur H. Nelson
Atty

Sept. 2, 1952 J. LA CESA 2,609,163

COIL WINDING APPARATUS

Filed Feb. 19, 1948 4 Sheets-Sheet 3

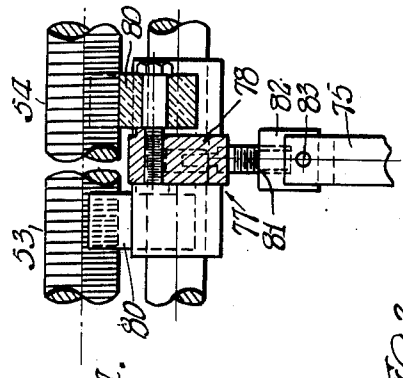

FIG. 4.

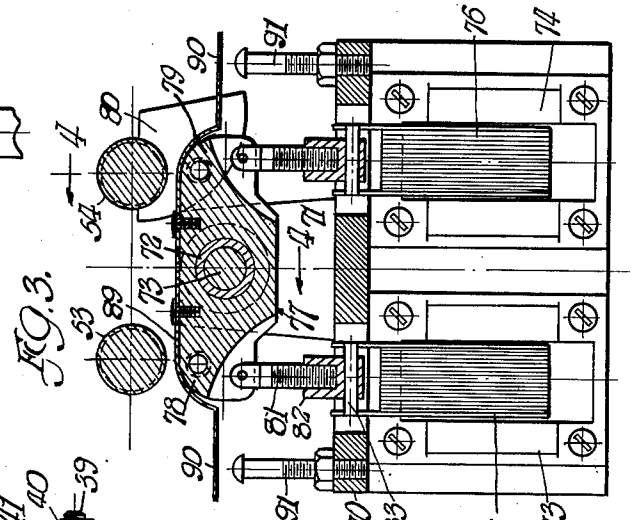

FIG. 3.

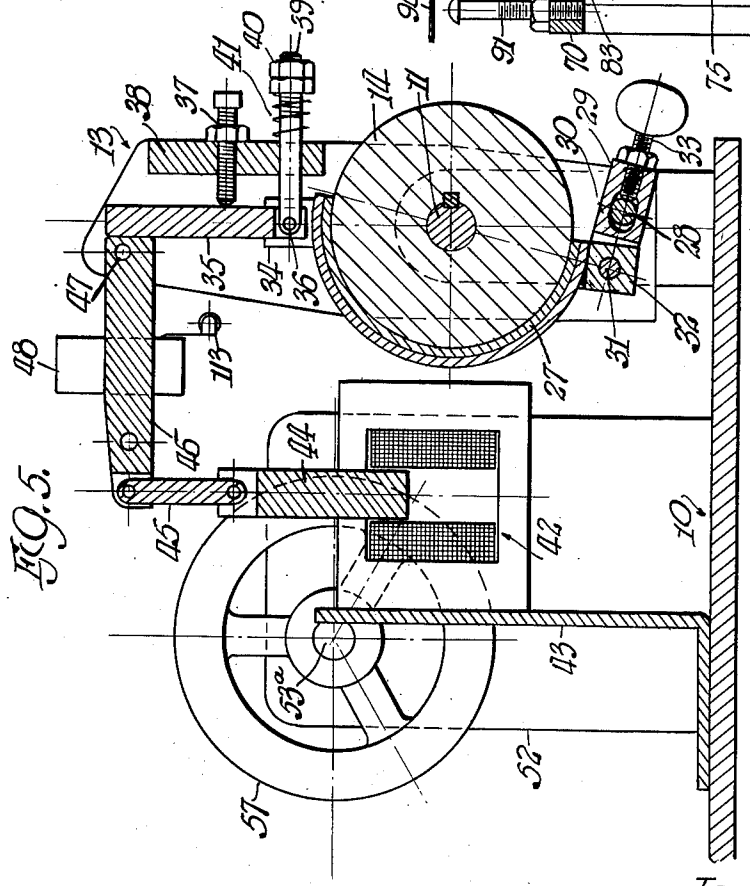

FIG. 5.

Inventor
Joseph La Cesa
by Arthur W. Nelson Atty

Sept. 2, 1952 J. LA CESA 2,609,163

COIL WINDING APPARATUS

Filed Feb. 19, 1948 4 Sheets-Sheet 4

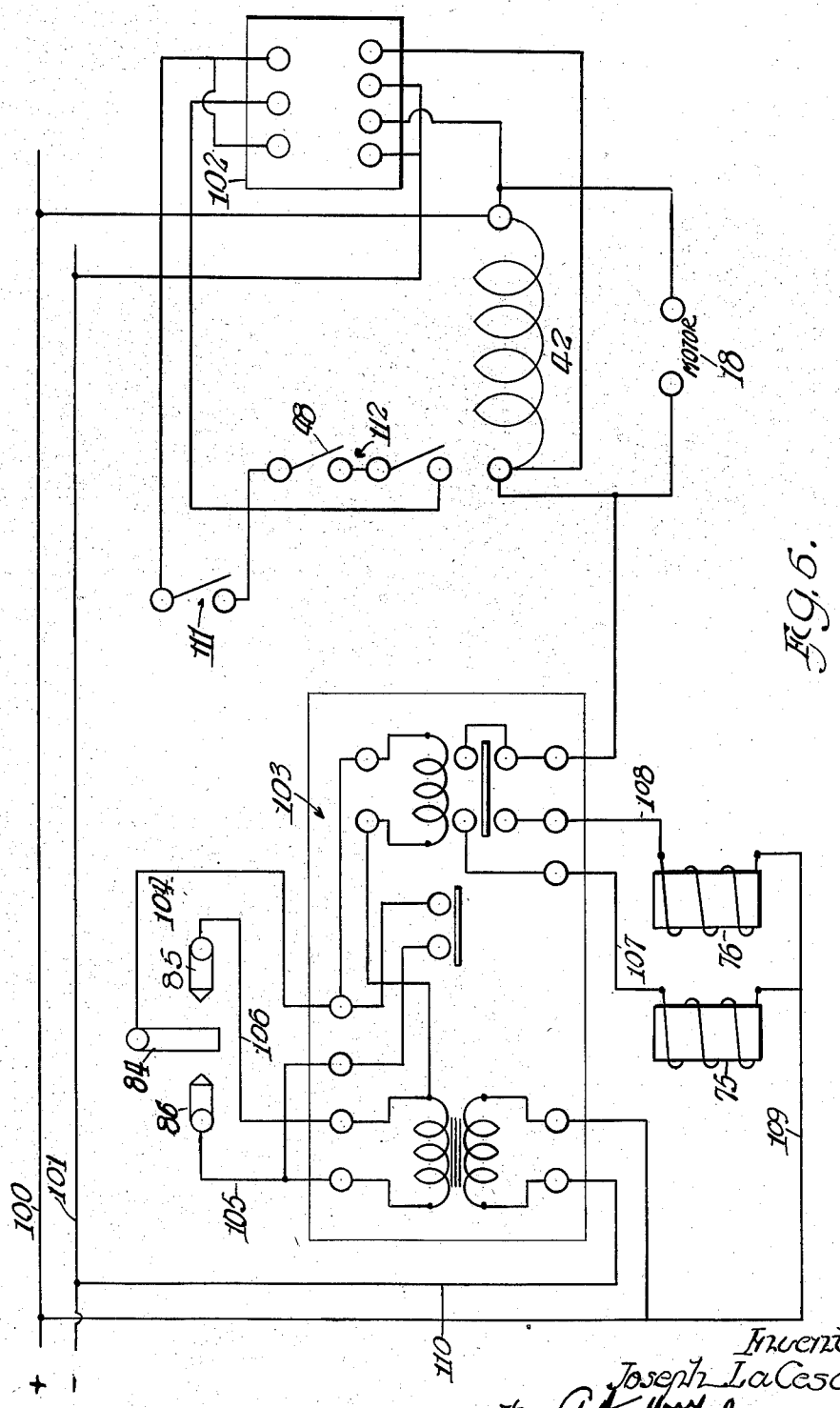

FIG. 6.

Inventor
Joseph LaCesa
by Arthur M. Nelson Atty

Patented Sept. 2, 1952

2,609,163

UNITED STATES PATENT OFFICE

2,609,163

COIL WINDING APPARATUS

Joseph La Cesa, Chicago, Ill.

Application February 19, 1948, Serial No. 9,483

15 Claims. (Cl. 242—158)

1

This invention relates to improvements in coil winding apparatus and it consists of the matters hereinafter described and more particularly pointed out in the appended claims. The apparatus is more especially intended for winding coils for electromagnets, solenoids, motor coils and other electrical devices.

One of the objects of the present invention is to provide a coil winding apparatus of the kind mentioned which, though of a simple construction, is capable of fast and accurate production of coils of uniform size and arrangement.

Another object of the invention is to provide apparatus of this kind which may be easily adjusted to produce coils of various different sizes and which will not get out of the adjustment for which it has been set and thereby produce non-uniform coils.

A further object of the invention is to provide apparatus of the kind mentioned which does not require a skilled operator to attend the same.

Also, it is an object of the invention to provide apparatus of this kind upon which either left or right hand wound coils may be produced, without requiring extensive readjustments in the apparatus.

Again, it is an object of the invention to provide apparatus having an improved wire laying feed including a feed screw driven carriage, which may be adjusted to take up wear and which may be readily adjusted and set when it is necessary to change the number of turns of wire in each layer and the length thereof in the coil to be made.

The above mentioned objects of the invention, as well as others, together with the advantages thereof will more fully appear as the specification proceeds.

In the drawings:

Fig. 1 is a top plan view of a coil winding apparatus embodying the preferred form of the invention.

Fig. 2 is a view in side elevation of the apparatus, as viewed from the wire feed side thereof at the top of Fig. 1, certain of the parts appearing in vertical section for a better illustration thereof.

Fig. 3 is a transverse detail vertical sectional view through parts of the feed carriage, as taken on the line 3—3 and on a scale enlarged over that of Fig. 1.

Fig. 4 is a detail vertical sectional view through a part of the feed carriage as taken on the line 4—4 and on the scale of Fig. 3.

Fig. 5 is a vertical sectional view through the

2

brake mechanism of the apparatus, as taken on the line 5—5 and on a scale enlarged over that of Fig. 1 and shows said mechanism in its set position to hold the winding mandrel against rotation.

Fig. 6 is a diagrammatic view of the electric circuit for the apparatus, which will be more fully referred to later.

Referring now in detail to that embodiment of the invention illustrated in the drawings, the improved apparatus includes a generally rectangular base 10, upon which other parts of the apparatus are mounted and which base may be disposed for support upon a suitable bench or the like, not shown. This base is deeper from front to rear than it is wide and the "front" thereof, at which the attendant or operator is stationed, is indicated in Fig. 1 by the letter "F."

Disposed along the front of the base is the power driven mandrel 11 of the apparatus, which is journalled for rotation in standards 12 and 13 respectively, rising from the base and best appearing in Fig. 1. On that part of the mandrel journalled in the standard 13 and extending therebeyond is a braking disc 14 and a pulley 15 respectively. The other end of said mandrel beyond the standard 12 is provided with a hand wheel 16, by which the mandrel may be turned by hand when necessary. Also operatively engaged on said other end of the mandrel beyond the hand wheel is an arbor 17 to receive one or more forms (not shown) upon which a coil is to be wound.

At the rear end of the base is a universal type of electric motor 18, which may be caused to run in either direction and pulleys 19 and 20 respectively are fixed to the armature thereof. The pulley 20 is in alignment with the pulley 15 on the mandrel and drives the same through a belt 21.

At the front of the base is a mechanism 22 for counting the number of turns of the mandrel 11 and which will be the number of turns (forth and back) to be wound upon the coil form on the arbor 17. This mechanism is of the kind known as a "high speed predetermining counter" and it can be set for any desired number of turns within its capacity and when the set number is reached, said mechanism will make or break the circuit of the apparatus and stop the same. Thereafter the counting wheels of the mechanism are manually reset to zero to start a new count. Such a counter mechanism is conventional and may be obtained in the open market and no claim is made thereto per se. The

mechanism 22 is suitably supported from the base 10, adjacent the mandrel 11 between its supporting standards 12 and 13, within convenient view of the operator from the station F. The counting wheel shaft of this mechanism, which is indicated at 23 (see Fig. 1) has a bevel gear 24 thereon, adjacent the mandrel 11. Longitudinally adjustable on said mandrel are bevel gears 25—26 either of which may be moved into operative driving mesh with the gear 24 to drive the same and the counter mechanism. When the mandrel 11 is being driven in one direction, the gear 25 is adjusted into mesh with the gear 24 and the other gear 26 is adjusted out of mesh therewith, as in Fig. 1. When the mandrel is being driven in the other direction, the gear 26 is adjusted into mesh with the gear 24 and the other gear 25 is adjusted out of mesh therewith. Set screws 25*s* and 26*s* respectively are provided to hold the gears 25 and 26 in desired set position. Thus, no matter in which direction the mandrel is driven as for making a left hand or a right hand wound coil, the counter mechanism is driven in the proper counting direction.

When the counting mechanism has reached the count or number of turns for which it has been set, it operates through a circuit later mentioned, to stop the motor 18. To prevent any overrun of the mandrel, after the motor has been deenergized, and which would produce a non-uniformity in the coils wound by the apparatus, I provide an electromagnetic braking mechanism, which is associated with the brake drum or disc 14. This mechanism best appears in Fig. 5.

Said braking mechanism includes a semicircular flexible brake band 27 that is disposed for braking engagement with the rear peripheral side of the drum or disc 14. The bottom end of said band is mounted for operative movement on a stud 28 projecting laterally from a part of the standard 13 by means of a block 29 having a slot 30 therein through which the stud 28 extends. The rear end of this block is bifurcated to engage upon opposite sides of an extension 31 on this end of the band and the bifurcated end of the block is pivoted to the extension by a pin 32. The front end of the block carries an adjusting screw 33 arranged to engage the stud 28 and the purpose of this screw is to adjust the band to take up any wear therein as the same becomes necessary.

The upper end of the band includes an extension 34, to which the bottom end of an upstanding lever 35 is pivoted by a pin 36. The mid portion of this lever fulcrums or rocks against an adjustable stud 37 carried by a lateral flange 38 on the standard 13. A tension screw 39, disposed below the stud 37 is pivoted at one end on the pin 36 and slides through the flange 38 and is provided at its forward end with adjusting nuts 40. A spring 41 surrounds that part of the screw 39 between said flange 38 and nuts 40 and normally tends to swing the lever 35 counterclockwise about the stud 37 as a fulcrum, as viewed in Fig. 5. This normally acts to urge the brake band 27 into braking engagement on the periphery of the drum.

To release the brake in timed relation to the start of a coil winding operation, there is provided an electromagnet 42 rearwardly of the brake drum and this magnetic coil is supported in an upright position by means of a bracket 43 (see Fig. 5) rising from the base 10. The armature for said coil is indicated at 44 and it extends upwardly therefrom. Its upper end is connected by a link 45 with the rear end of a lever 46, the front end of which is pivoted on a stud 47 extending laterally from the standard 13. The front end of said lever is flat and it normally engages the upper end of the rear side of the lever 35. On this lever 46 is located a switch 48, the purpose of which will later appear. When the magnet coil 42 is energized, it will retract its armature and rock the lever 46 counterclockwise, as viewed in Fig. 5. In this rocking of said lever, its flat front end, which engages the upper end of the lever 35, functions as a cam, to swing said lever clockwise about the fulcrum stud 37, against the action of the spring 41. This releases the braking action of the band 27 relative to the drum 14 so that the mandrel 11 can freely rotate. When the coil 42 is deenergized, the spring 41 functions immediately to set the brake band 27 on the drum and stop the mandrel.

Rising from the base 10 rearwardly of the mandrel are laterally spaced upright standards 51 and 52 respectively, best appearing in Fig. 1. These standards extend parallel with opposite sides of the base 10. Journalled at their ends in these standards are laterally spaced feed screws 53 and 54 respectively and adjacent the standard 52, these screws carry meshing gears 55 and 56 respectively, which best appear in Fig. 2. The feed screw 53 has an extension 53*a* (best shown in dotted lines in Fig. 1) and to which is fixed a pulley 57. By means of the gears 55—56, the feed screws are rotated in opposite directions.

Located on the base 10, between the pulley 57 and the motor 18, is a stepless variable speed pulley set, indicated as a whole in Fig. 1, by the numeral 58. It includes a pair of axially movable pulleys 59 and 60 respectively that are mounted on a shaft 61 carried by the upper end of a bracket 62 that is pivoted at its bottom end as at 63 on the base, so as to be swung forwardly or rearwardly of the base. The pulleys of this set are connected by belts 64—65 with the pulleys 57 and 19 respectively, before mentioned, whereby the feed screws 53—54 may be driven as a unit at different speeds from the motor 18 without affecting the drive between the pulleys 20 and 15.

The bracket 62 may be swung rearwardly or forwardly of the base and in this movement the effective diameter of the pulleys 59 and 60 are changed in proportion, i. e. when the effective diameter of the pulley is increased, the effective diameter of the pulley 60 is decreased and vice versa. Stepless variable speed pulley sets of this kind are conventional and are obtainable in the market and I make no claim to the structure thereof per se. To swing the bracket 62 in either direction, I provide a threaded shaft 66 that is arranged parallel with the belt 64 and which has a downward pitch from front to rear. The rear end of this shaft has a universal yoke connection 67 with the upper end of the bracket 62 while the front end of said shaft has threaded engagement through a stud 68, pivotally engaged in an upper end extension of the bracket 52. On this front end of the shaft forwardly of the stud 68 is a hand wheel 69 and by which the shaft may be turned in either direction. When said shaft 66 is turned in either direction, it will cause a swinging movement of the bracket 62 and cause a change in the relative effective diameter of the pulleys 59 and 60 and thus pro-

duce a variation in drive from the motor 18 to the feed screws 53—54.

Associated with the feed screws 53—54 is a wire lay or layer feed carriage which is adapted for a forth and back movement as produced by the feed screws 53—54 and which carriage carries an extension that supports guide means for the wire to be wound into a coil. The travel of this carriage determines the length of lay or layer of wire in the coil.

This carriage is best shown in Figs. 3 and 4 and it embodies therein a horizontally disposed plate 70 that includes an upstanding boss 71. Fixed in this boss is a tubular shaft 72 that slides through the standard 51 and also slides upon an interior shaft 73 fixed in the standard 52. This structure provides a sliding guided back and forth movement for the carriage in the direction of the length of the feed screws 53—54. The carriage supports a pair of depending solenoids 73—74, each including an upstanding armature 75—76 and the upper ends of which extend up through suitable holes in the carriage.

77 indicates a lever mounted on the tubular shaft 72 for a rocking movement and this lever includes laterally extending like arms 78, each overhanging an armature 75—76. Pivotally mounted on each arm as at 79 is a half-nut 80, each adapted for engagement with the underside of an associated feed screw 53—54. Each arm has pivotally connected thereto the upper end of a link 81, the lower end of which is threaded into the upper end of a block 82, pivoted on a cross pin 83 carried by the upper end of an associated armature 75—76. When either solenoid is energized, it attracts its armature 75—76 and imparts a downward pull on the associated arm of the lever 78 and causes the lever to rock, so as to disengage its associated half nut from one of the screws 53—54 and engage the other half nut with the other of said screws. Thus, when one half nut is engaged with its feed screw, and the same is being driven, the carriage travels in one direction along the feed screws for a length or distance equal to the length of a lay or layer of wire to be wound upon the coil form. When this distance is reached, suitable means later to be described, function to cause a reversal of the half nuts so that the carriage travels in the other direction for the length of the next lay wound on the coil form.

The length of the travel of the carriage forth and back is controlled electrically and therefore the carriage includes a contact 84 (see Fig. 1) which travels with the carriage. Associated with the contact 84 are contacts 85—86, which are adjustably fixed in the standards 51—52 in line with the contact 84, by means of set screws 87—88 respectively. The contacts 85—86 are in the form of rods and these may be adjusted toward or away from each other, so as to determine the length of the lay or layer of the wire to be wound upon the coil form. In the movement of the carriage, the contact 84 thereon will engage say the contact 85 and this will actuate the solenoids, to rock the lever 78 and shift the half nuts so that the carriage is caused to travel in the other direction. When the contact 84 reaches the other contact 86 and engages therewith, the carriage is caused to travel in the other direction so that a forth and back movement of the carriage is provided therefor and which, as before mentioned, determines the length of each lay or layer of wire for the coil.

In making an adjustment or change of the contacts 85—86 from one length of lay or layer to another, the adjustment is made when the apparatus is in an idle condition and at which time the feed screws 53—54 are not being driven. This necessitates a manual shift of the carriage along the feed screws and from which both half nuts must be disengaged from their respective feed screws. To make this manual shift of the carriage there is fixed to the upper surface of the lever 78 a member 89 having extension finger pieces 90—90 of limited flexibility. Beneath each finger there rises from the carriage an adjustable stop 91 therefor. These parts best appear in Fig. 3.

By spanning the feed screws 53—54 with the thumb and one finger of the hand, either piece 90—90 may be depressed to free that half nut engaged with its feed screw, so that both half nuts are then free from their respective feed screws and whereby the carriage may be freely moved therealong in either direction when setting the lever to engage either of the contacts 85—86 in a new adjustment thereof.

The tubular shaft 72 carries an arm 93 upon which are rotatively mounted tension devices 94 for the wire and which directs the same upon the form on the arbor 17 and such a wire is indicated at 95 in Fig. 2. This wire is fed from a reel 96 and suitable tension and guide means 97 mounted on a stand 98 that may be disposed at a point to the rear of the base.

In Fig. 6 is illustrated diagrammatically a circuit for the apparatus. Said circuit includes main current conductors 100—101, a relay 102, which is associated with the counter mechanism and reduces the voltage thereof, a duplex relay 103 for the solenoid coils 73—74 on the carriage 70 and the reversing contacts 84—85 and 86 and connected thereto by the conductors 104—105 and 106 respectively. One side of the solenoid is connected by lines 107—108 to certain of the terminals in the relay 103 and the other side of said coils are both connected to the conductor 100 by a conductor 109. A line 110 leads from the other conductor 101 to and through one of the coils in the relay 103 and leads to the line 109.

The main shut-off switch is indicated at 111. The solenoid coil for the brake is indicated at 42, as before and 18 indicates the motor in this circuit. The switch in the counter mechanism 22 is indicated at 112 and the maintaining or operating switch is indicated at 48, which switch is carried by the lever 46 of the brake mechanism and includes a contact member 113 (see Fig. 5) for engagement with the standard 13 for closing the circuit for a starting for each coil winding operation. This switch is preferably pedal actuated by the operator and when it is closed, the motor 18 is energized and the apparatus is in operation and runs automatically until the predetermined number of turns of wire for which the counter 22 is set is reached. When the switch 112 in the counter operates, it opens the circuit so that the apparatus is stopped.

In operation, the operator places a coil form on the arbor 17 and anchors the end of the wire 95 thereto after passing the same through the tension devices 94. Assume now that the counter 22 has been set for the number of turns of wire required in the coil. By stepping on the pedal, before mentioned, the maintaining switch 111 is caused to release the brake from the holding action of the spring 41. This closes the circuit to the motor 18 and starts it into operation so that it drives the mandrel. Closing of the cir-

cuit energizes one of the solenoids 73—74 so that one of the half nuts 80 engages its associated feed screw 53 or 54, as the case may be, so that the carriage travels longitudinally in one direction along the screws 53—54. In this movement of the carriage, the tubular shaft 72 moves longitudinally therewith and through the tension devices 94, lays each turn of wire in its proper place in its layer. When the carriage has completed a movement in one direction and has laid a layer of wire, its contact 84 will engage one or the other of the contacts 85 or 86 and will energize the other solenoid 73 or 74 and cause a reversal of movement of the carriage so that the next layer of wire is laid on the coil.

Each layer of wire on the coil is predetermined according to the setting of the contacts 85—86 and this building up of the layers is continued automatically until the counter 22 reaches that number of turns for which it has been set. At this time it will function through its switch 112 to stop the motor 18 and cause application of the brake 27—14 so that no overrun can occur, because of momentum, as to the number of turns incorporated in the coil being wound. This insures uniformity in production.

When the apparatus stops upon the completion of winding a coil, the operator cuts the wire near the coil and anchors the end of the coil in place. The coil and form is then removed from the arbor and another coil form substituted therefor and the operator starts another operation by the actuation of the switch 48.

If desired, an arbor holding several coil forms may be employed so as to wind a plurality of coils at one time. This, of course, would necessitate providing a tension 94 on the tubular shaft 72 for each coil, the winding of all of said coils occurring simultaneously.

The apparatus, when started into operation, is automatic and fast in operation, is durable and is accurate in operation for uniform production and is flexible in such operation and is capable of winding cores with paper insulating section, solenoid, field and motor coils of many different shapes and sizes.

While in describing the invention I have referred in detail to the form, arrangement and construction of the parts involved therein, the same is to be considered only in the illustrative sense and therefore I do not wish to be limited thereto except as may be specifically set forth in the appended claims.

I claim as my invention:

1. Coil winding apparatus embodying therein a wire laying carriage, means upon which said carriage is mounted for a forth and back movement thereon, a lever mounted on said carriage for a rocking movement in a plane transversely of the plane of movement of said carriage, rotatively mounted laterally spaced feed screws arranged parallel with the line of movement of the carriage, half nuts mounted on said lever for engagement with an associated feed screw and adapted in the rocking movement of said lever to be alternately engaged with and disengaged from said feed screws, electromagnetic means mounted on said carriage, one for each half nut and each including an armature, means for connecting parts of said lever on opposite sides of the rocking axis thereof, each with an armature, a circuit for said electromagnetic means, and means operative as the carriage reaches the limit of its movement in one direction for disconnecting an electromagnetic means from said circuit and connecting the other electromagnetic means thereto to cause a reversal of movement of the carriage.

2. Coil winding apparatus embodying therein laterally spaced feed screws, a wire laying carriage, means providing a guided forth and back movement of said carriage in a plane parallel with said feed screws, a lever mounted on said carriage for a rocking movement transversely of the feed screws and including oppositely extending arms, a half nut carried by each arm and each associated with a feed screw for engagement with and disengagement therefrom in the rocking movement of said lever, an electromagnetic coil, one for each arm and mounted on the carriage, an armature for each coil and operatively connected to an associated arm, and operating when energized to rock said lever to disengage one half nut from its feed screw and to engage the other half nut with its feed screw, and manually operable means for disengaging both nuts from the associated feed screws when both coils are deenergized so that the carriage may be manually shifted in the direction of its line of movement.

3. Coil winding apparatus embodying therein laterally spaced, oppositely rotatable parallel feed screws, a stationary guide parallel with said screws, means mounted for a back and forth longitudinal movement on said guide and adapted for carrying a wire laying means, a carriage movable with said means, a lever capable of a rocking movement transversely of the carriage and including end arms, one associated with each feed screw, a half nut mounted on each arm and each including a threaded portion for engagement with its associated feed screw, a plurality of electromagnets mounted on said carriage and each including an armature, operatively connected to said arms of said lever to rock the latter to engage one half nut with its feed screw and to disengage the other half nut from its feed screws, and means operative as the carriage approaches the limit of a lay of wire in each direction for alternately energizing said electromagnets.

4. Coil winding apparatus embodying therein laterally spaced, oppositely rotatable parallel feed screws, a stationary guide parallel with said screws, means mounted for a back and forth longitudinal movement on said guide and adapted for carrying a wire laying means, a carriage movable with said means, a lever capable of a rocking movement transversely of the carriage and including end arms, one associated with each feed screw, a half nut mounted on each arm and each including a threaded portion for engagement with its associated feed screw, a plurality of electromagnets mounted on said carriage and each including an armature, operatively connected to said arms of said lever to rock the latter to engage one half nut with its feed screw and to disengage the other half nut from its feed screw, an electric circuit for said electromagnets and including stationary but adjustable contacts spaced apart longitudinally a distance corresponding to the length of the lay of wire to be made, and a contact movable with said carriage and adapted in the movement thereof to alternately engage said stationary contacts to control the energization of said electromagnets.

5. Coil winding apparatus embodying therein laterally spaced, oppositely rotatable parallel feed screws, a stationary guide parallel with said

screws, means mounted for a back and forth longitudinal movement on said guide and adapted for carrying a wire laying means, a carriage movable with said means, a lever capable of a rocking movement transversely of the carriage and including end arms, one associated with each feed screw, a half nut mounted on each arm and each including a threaded portion for engagement with its associated feed screw, a plurality of electromagnets mounted on said carriage and each including an armature, operatively connected to an associated arm of said lever to engage one half nut with its feed screw and to disengage the other half nut from its feed screw, an electric circuit for said electromagnets and including stationary but adjustable contacts spaced apart longitudinally a distance corresponding to the length of the lay of wire to be made, a contact movable with the carriage and adapted in the movement thereof to alternately engage said stationary contacts to control the energization of said electromagnets, and means including finger engageable portions on said lever for manually rocking the same in a direction releasing both half nuts for said screws to permit a longitudinal movement of said first mentioned means and the carriage thereon independently of said feed screws in a setting of said stationary but adjustable contacts to accommodate the length of the lay of wire to be made.

6. Coil winding apparatus embodying therein laterally spaced oppositely rotating feed screws, shaft means between and parallel with said screws, a carriage mounted for longitudinal movement on said shaft means, a lever movable with and mounted for rocking movement on said carriage, about an axis parallel with the axis of said shaft means, said lever including oppositely extending arms, electromagnetic means on said carriage and operatively connected to said lever for imparting rocking movement thereto in opposite directions, a half nut on each arm and each adapted in the rocking movement of said lever under the action of said electromagnetic means to be alternately engaged with and disengaged from the associated feed screw.

7. Coil winding apparatus embodying therein laterally spaced oppositely rotating feed screws, shaft means between and parallel with said screws, a carriage mounted for longitudinal movement on said shaft means, a lever movable with and mounted for rocking movement on said carriage, about an axis parallel with the axis of said shaft means, said lever including oppositely extending arms, electromagnetic means on said carriage and operatively connected to said lever for imparting rocking movement thereto in opposite directions, a half nut pivotally mounted on each arm for rocking movement about an axis parallel with said axis of said shaft means and each of which half nuts is adapted in the rocking movement of said lever, under the action of said electromagnetic means, to be alternately engaged with and disengaged from the associated feed screw.

8. Coil winding apparatus embodying therein laterally spaced oppositely rotating feed screws, shaft means below, between and parallel with said screws, a carriage mounted for longitudinal movement on said shaft means, a lever movable with and mounted for rocking movement on said carriage about an axis parallel with the axis of said shaft means, said lever including oppositely extending arms, electromagnetic means on said carriage operatively connected to said lever for imparting rocking movement thereto in opposite directions, a half nut mounted on each arm and each adapted in the rocking movement of said lever under the action of said electromagnetic means to be alternately engaged with and disengaged from the under side of the associated feed screw.

9. Coil winding apparatus embodying therein laterally spaced oppositely rotating feed screws, shaft means between and parallel with said screws, a carriage mounted for longitudinal movement on said shaft means, a lever movable with and mounted for rocking movement on said carriage, about an axis parallel with the axis of said shaft means, said lever including oppositely extending arms, electromagnetic means on said carriage and operatively connected to said lever for imparting rocking movement thereto in opposite directions, a half nut on each arm and each adapted in the rocking movement of said lever under the action of said electromagnetic means to be alternately engaged with and disengaged from the associated feed screw, said electromagnetic means comprising a pair of solenoids and an armature associated with each solenoid and operatively connected to an associated lever arm.

10. Coil winding apparatus embodying therein laterally spaced oppositely rotating feed screws, shaft means between and parallel with said screws, a carriage mounted for longitudinal movement on said shaft means, a lever movable with and mounted for rocking movement on said carriage, about an axis parallel with the axis of said shaft means, said lever including oppositely extending arms, electromagnetic means on said carriage and operatively connected to said lever for imparting rocking movement thereto in opposite directions, a half nut on each arm and each adapted in the rocking movement of said lever under the action of said electromagnetic means to be alternately engaged with and disengaged from the associated feed screw, and means carried by said lever for rocking the same independently of said electromagnetic means into a position disengaging both said half nuts from said screws to permit a manual shifting of the carriage in either direction longitudinally of said screws.

11. Coil winding apparatus embodying therein laterally spaced oppositely rotating feed screws, shaft means between and parallel with said screws, a carriage mounted for longitudinal movement on said shaft means, a lever movable with and mounted for rocking movement on said carriage, about an axis parallel with the axis of said shaft means, said lever including oppositely extending arms, electromagnetic means on said carriage and operatively connected to said lever for imparting rocking movement thereto in opposite directions, a half nut on each arm and each adapted in the rocking movement of said lever under the action of said electromagnetic means to be alternately engaged with and disengaged from the associated feed screw, and means carried by said lever and including parts extending outwardly beyond the ends of the arms of said lever to provide finger engageable parts for manually rocking said lever into a position disengaging both of said half nuts from said screws to permit a manual shifting of the carriage in either direction longitudinally of said screws.

12. Coil winding apparatus embodying therein laterally spaced oppositely rotating feed screws,

shaft means between and parallel with said screws, a carriage mounted for longitudinal movement on said shaft means, a lever movable with and mounted for rocking movement on said carriage, about an axis parallel with the axis of said shaft means, said lever including oppositely extending arms, electromagnetic means on said carriage and operatively connected to said lever for imparting rocking movement thereto in opposite directions, a half nut on each arm and each adapted in the rocking movement of said lever under the action of said electromagnetic means to be alternately engaged with and disengaged from the associated feed screw, and means carried by said lever and including parts extending outwardly beyond the ends of the arms of said lever to provide finger engageable parts for manually rocking said lever into a position disengaging both of said half nuts from said screws to permit a manual shifting of the carriage in either direction longitudinally of said screws, and means mounted on said carriage and affording limiting stops for engagement by said parts extending outwardly beyond the ends of said arms of said lever.

13. Coil winding apparatus embodying therein laterally spaced feed screws, standards in which the ends of said screws are journalled, for rotation in opposite directions, a shaft below and midway between said screws and fixed at one end in one of said standards, a member mounted for a turning as well as a longitudinal movement on said shaft and slidable through the other of said standards, a carriage mounted on said member for longitudinal movement therewith, a lever mounted on said member for rocking movement about an axis parallel to that of said shaft and including laterally extending arms, a half nut carried by each arm and each adapted in the rocking movement of said lever to be alternately engaged with and disengaged from the associated feed screw, and electromagnetic means mounted on the carriage and operatively connected to said lever for imparting said rocking movement to said lever.

14. Coil winding apparatus embodying therein laterally spaced feed screws, standards in which the ends of said screws are journalled, for rotation in opposite directions, a shaft below and midway between said screws and fixed at one end in one of said standards, a member mounted for a turning as well as a longitudinal movement on said shaft and slidable through the other of said standards, a carriage mounted on said member for longitudinal movement therewith, a lever mounted on said member for rocking movement about an axis parallel to that of said shaft and including laterally extending arms, a half nut carried by each arm and each adapted in the rocking movement of said lever to be alternately engaged with and disengaged from the associated feed screw, and electromagnetic means mounted on the carriage and operatively connected to said lever for imparting said rocking movement to said lever, an electric circuit for said electromagnetic means and contact members carried in part by said standards and in part by said carriage and included in said circuit for controlling the action of said electromagnetic means in rocking said lever.

15. Coil winding apparatus embodying therein laterally spaced feed screws, standards in which the ends of said screws are journalled, for rotation in opposite directions, a shaft below and midway between said screws and fixed at one end in one of said standards, a tubular shaft mounted for a turning as well as a longitudinal movement on said first mentioned shaft and slidable through the other of said standards, a carriage mounted on said tubular shaft for longitudinal movement therewith, a lever also mounted on said tubular shaft for a rocking movement about the axis thereof and including laterally extending arms, a half nut carried by each arm and each adapted in the rocking movement of said lever to be alternately engaged with and disengaged from the associated feed screw, and electromagnetic means mounted on the carriage and operatively connected to said lever for imparting rocking movement thereto.

JOSEPH LA CESA.

REFERENCES CITED

The following references are of record in the file of this patent:

UNITED STATES PATENTS

Number	Name	Date
548,903	Wood	Oct. 29, 1895
1,503,272	Lewellyn	July 29, 1924
1,547,274	Varley	July 28, 1925
1,826,758	Field	Oct. 13, 1931
1,944,581	Snyder	Jan. 23, 1934
1,948,776	Thordasson et al.	Feb. 27, 1934
1,990,834	McIlvried	Feb. 12, 1935
2,030,988	Hofstetter	Feb. 18, 1936
2,159,635	Ranney	May 23, 1939
2,186,820	Chapman	Jan. 9, 1940
2,437,725	Conner	Mar. 16, 1948

FOREIGN PATENTS

Number	Country	Date
22,283	Switzerland	Apr. 30, 1901
119,153	Germany	Mar. 11, 1900