Sept. 1, 1970 W. F. BOYLETT ET AL 3,526,102

PUMPING AND COOLING SYSTEM

Filed Aug. 21, 1968 5 Sheets-Sheet 1

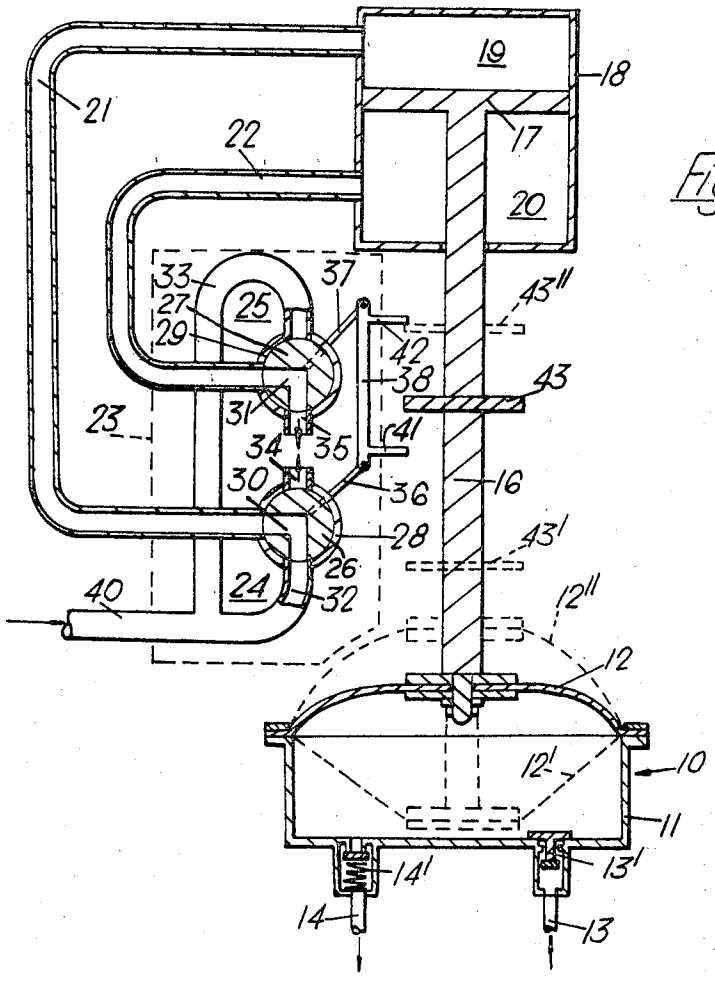

Fig. 1.

Inventors
William Frederick Boylett
Joseph William Hill
Tom Barton Leamon
George Shaw
By
Morrison, Kennedy & Campbell
Attorneys

Sept. 1, 1970 W. F. BOYLETT ET AL 3,526,102

PUMPING AND COOLING SYSTEM

Filed Aug. 21, 1968 5 Sheets-Sheet 2

Fig. 2.

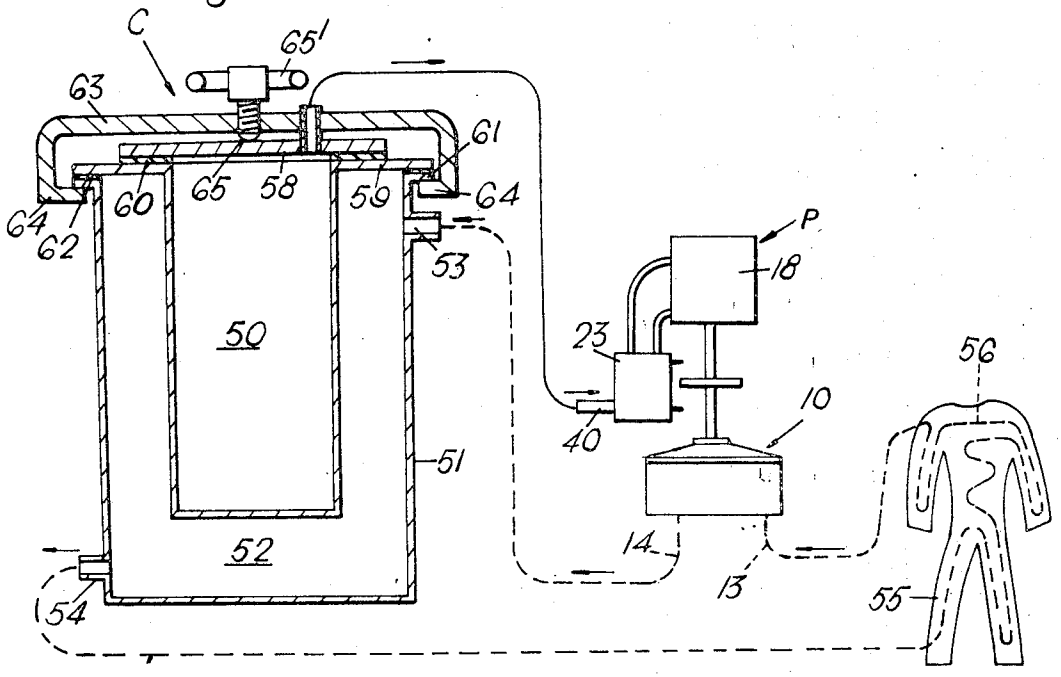

Inventors
William Frederick Boylett
Joseph William Hill
By
Morrison, Kennedy & Campbell
Attorneys

Sept. 1, 1970 W. F. BOYLETT ET AL 3,526,102

PUMPING AND COOLING SYSTEM

Filed Aug. 21, 1968 5 Sheets-Sheet 3

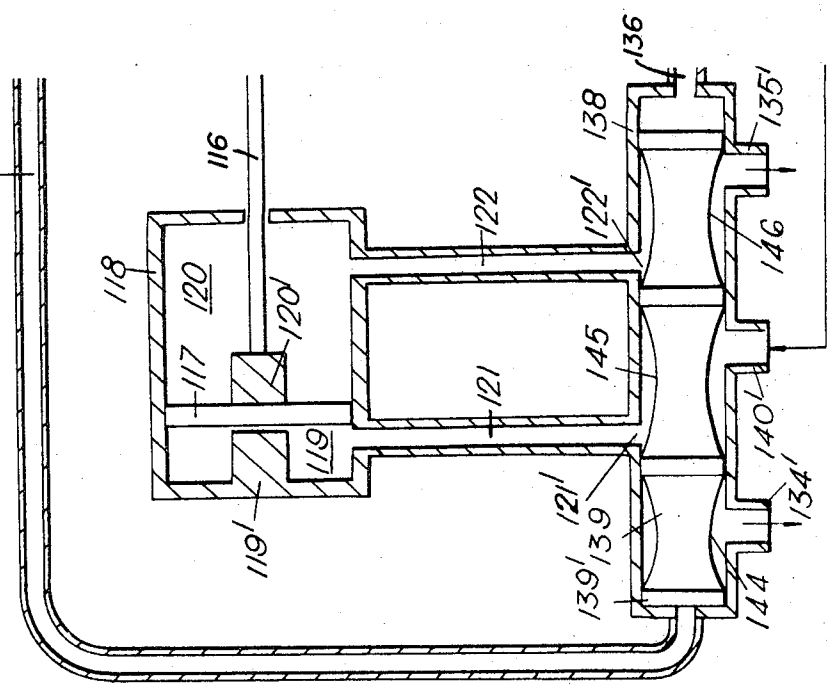

Fig. 3A

Inventors
William Frederick Boylett
Joseph William Hill
Tom Barton Heamon
George Shaw
By
Morrison, Kennedy & Campbell
Attorneys

PUMPING AND COOLING SYSTEM

Filed Aug. 21, 1968 5 Sheets-Sheet 4

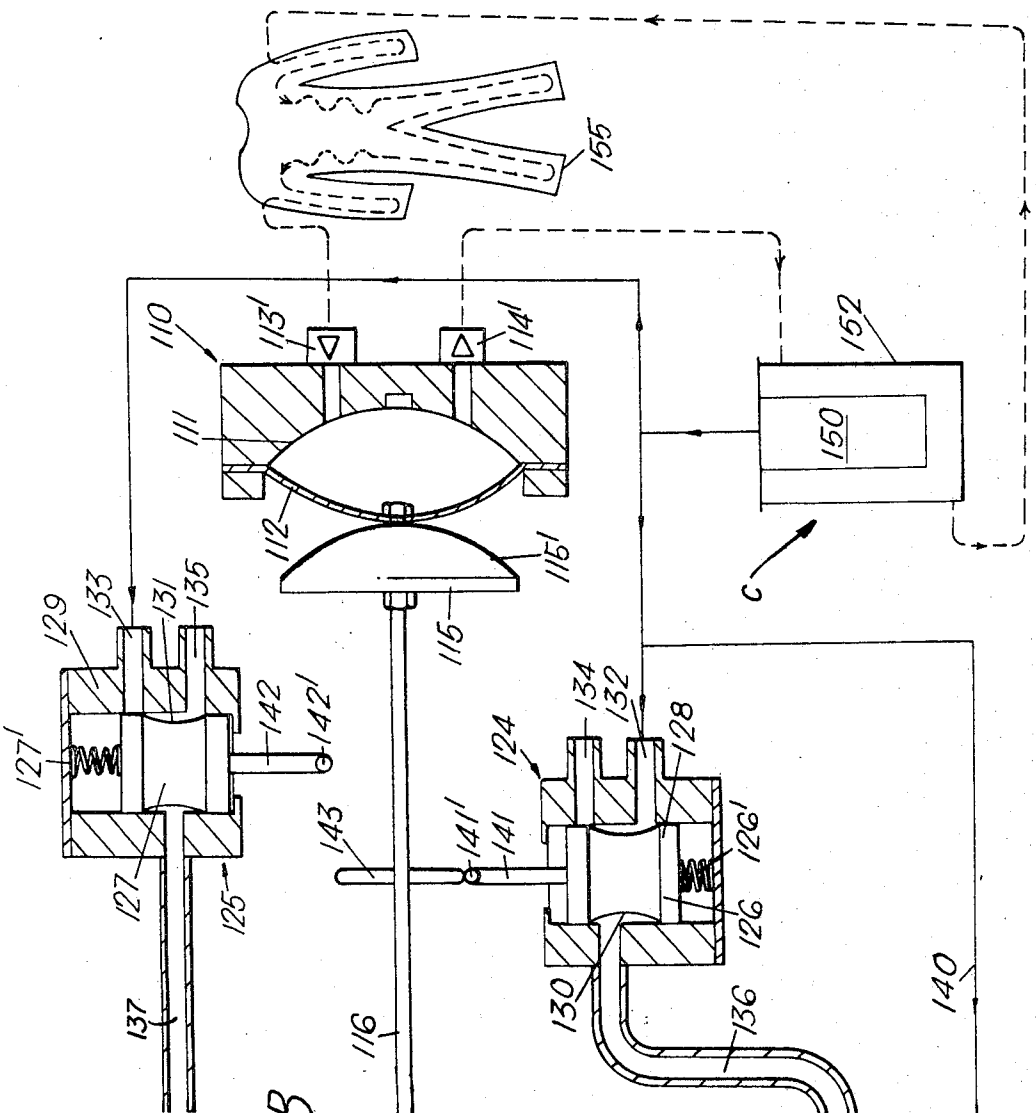

Fig. 3B

Inventors
William Frederick Boylett
Joseph William Hill
Tom Barton Leamon
By George Shaw
Morrison, Kennedy & Campbell
Attorneys

Sept. 1, 1970 W. F. BOYLETT ET AL 3,526,102

PUMPING AND COOLING SYSTEM

Filed Aug. 21, 1968 5 Sheets-Sheet 5

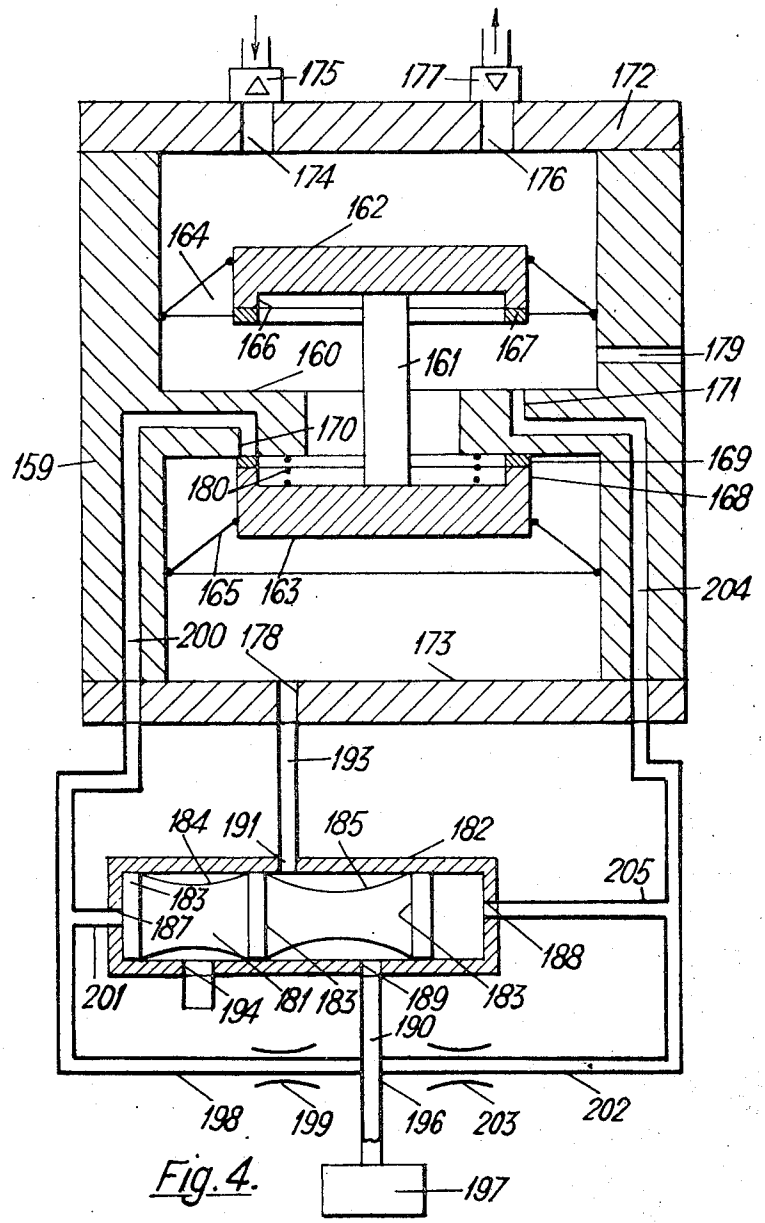

Fig. 4.

Inventors
William Frederick Boylett
Joseph William Hill
Don Baxter Leamon
George Shaw
By
Morrison, Kennedy & Campbell
Attorneys

United States Patent Office 3,526,102 Patented Sept. 1, 1970

3,526,102

PUMPING AND COOLING SYSTEM

William F. Boylett, Ormskirk, Joseph William Hill, Saint Helens, Tom B. Leamon, Ormskirk, and George Shaw, Bickerstaff, England, assignors to Pilkington Brothers Limited, Liverpool, England, a corporation of Great Britain

Filed Aug. 21, 1968, Ser. No. 754,283
Claims priority, application Great Britain, Aug. 25, 1967, 39,195/67
Int. Cl. F25d 23/12; B67d 5/62
U.S. Cl. 62—259 10 Claims

ABSTRACT OF THE DISCLOSURE

A pumping and cooling system for a protective suit comprises a coolant circuit including passages in the suit and a flow passage in heat exchange with an evaporating refrigerator; and a reciprocating pump in the circuit is operated by pressure fluid from the refrigerant through valve means having two settings corresponding to the two strokes of the pump and operated cyclically by changeover means.

BACKGROUND OF THE INVENTION

Field of the invention

This invention relates to pumping and cooling systems for circulating coolant in a closed fluid circuit, including, for example, coolant channels in protective clothing.

Description of the prior art

A well known form of protective clothing for wear by personnel who are required to work in uncomfortably hot surroundings or in areas exposed to intense heat radiation, has a lining provided with channels through which a coolant, usually a liquid, is circulated by an external pump. Associated with the pump is a refrigerating unit for extracting heat from the coolant. Usually the pump and refrigerating unit are provided in a static installation located outside the high temperature working area, but this is unsatisfactory where personnel need to have a high degree of mobility as it is necessary to link the protective clothing with the static installation by fluid supply and return lines.

One object of the present invention is to provide a pumping and cooling system which may be compact and of lightweight construction, so that when it is employed to circulate coolant in protective clothing as described above it may be carried by the wearer of the protective clothing, thereby freeing the apparatus of any connection to an external static installation.

SUMMARY

A pumping and cooling system according to the present invention comprises a sealable vessel arranged in heat-exchange relationship with a coolant flow passage which is adapted to form part of a coolant circuit, said vessel being adapted to contain an evaporating refrigerant which releases pressure fluid upon absorption of heat, a fluid pressure-actuated reciprocating pump connected in the coolant circuit, and having a control connection to the vessel for supplying pressure fluid to control the pump, valve means in the control connection between the vessel and the pump and having two settings corresponding to induction and delivery strokes of the pump, and changeover means effective to change the setting of the valve means cyclically so that the pump effects continuous reciprocation.

The system according to the invention is readily adaptable for portable use, as for continuous operation of the pump it is necessary only to provide a suitable heat-absorbing medium in the vessel. Such a medium preferably comprises a solidified or liquefied gas exposed to a temperature in excess of its sublimation or boiling temperature. Solid carbon dioxide is particularly suitable as its sublimation point is below normal atmospherc temperature.

In a preferred embodiment the valve means has two fluid outlets and is operable to supply pressure fluid from the sealable vessel to the two outlets in turn.

Desirably the changeover means is connected to a movable part of the pump and is effective automatically when the pump is at the end of a stroke to change the setting of the valve means so that the pump commences the next stroke.

Preferably a change of setting of the valve means is effected by the application of fluid pressure controlled by the changeover means, the changeover means being effective to provide a communication between said vessel and a fluid inlet associated with said valve means, at which inlet fluid pressure can be applied to effect a change of setting of the valve means.

The valve means according to one preferred embodiment of the invention comprise a spool valve movable axially in a housing, the changeover means being effective to provide selectively a communication between said vessel and a fluid inlet at one end of said housing, and between said vessel and a fluid inlet at the other end of said housing, a change of setting of the valve means being effected by application of fluid pressure at the fluid inlet at the appropriate end of said housing to move the spool valve axially.

In an alternative preferred embodiment the valve changeover means comprise sealing means mounted for movement with the pump and arranged to block an exhaust port when the pump is at the end of a stroke, a duct providing communication between said exhaust port and said vessel, and having a control outlet communicating with said duct at which fluid pressure can be applied to effect a change of setting of the valve means, whereby when said exhaust port is blocked by the sealing means fluid pressure is applied at said control outlet to cause a change in setting of the valve means.

In such an embodiment the system may include a first duct having an exhaust outlet and communicating with a control outlet at which fluid pressure can be applied to change the valve means from a first setting to a second setting, and a second duct having an exhaust outlet and communicating with a control outlet at which fluid pressure can be applied to change the valve means from said second setting to said first setting, said first and second ducts communicating with said vessel, and wherein the pump has associated therewith respective sealing means effective to block the exhaust outlets of said first and second ducts when the pump is respectively at the end of a pumping stroke and an induction stroke, so that fluid pressure is applied to the first and second control outlets alternately.

The sealable vessel preferably comprises a container for the evaporating refrigerant enclosed in a jacket which defines with the container said coolant flow passage.

BRIEF DESCRIPTION OF THE DRAWINGS

FIG. 1 is a diagrammatic cross-section of pumping apparatus in a preferred embodiment of the invention;

FIG. 2 illustrates diagrammatically and partly in section a combined pumping and cooling system incorporating the apparatus of FIG. 1;

FIGS. 3A and 3B illustrate diagrammatically a combined pumping and cooling system according to an alternative embodiment of the invention, and

FIG. 4 is a diagrammatic cross-section through an alternative form of pumping apparatus for use in a system according to the invention.

DESCRIPTION OF THE PREFERRED EMBODIMENT

Referring to FIG. 1, a fluid-operated pumping apparatus includes a positive displacement diaphragm pump **10** comprising a pump chamber **11** one wall of which is constituted by a flexible diaphragm member **12**. A fluid inlet **13** and outlet **14** communicate with the pump chamber **11** by way of respective inlet and outlet non-return valves **13'**, **14'**. A pump actuating rod **16** is attached to the centre of the diaphragm member **12**, reciprocation of the rod **16** flexing the diaphragm member **12** to cause induction of fluid through the inlet **13** and expulsion of fluid through outlet **14** on outward and inward strokes of the rod respectively.

At its end remote from the diaphragm member **12** the actuating rod **16** is connected to a driving piston **17** which is mounted for sliding movement in a cylinder **18**. The piston **17** divides the interior of the cylinder **18** into two spaces **19**, **20** and provides a seal between said spaces. The spaces **19**, **20** communicate through respective conduits **21**, **22** with valve means **23** shown generally enclosed in broken lines.

The valve means **23** comprises in this embodiment two respective three-way rotary valves **24**, **25** having respective cylindrical plugs **26**, **27** mounted rotatably and fluid-tightly in respective cylindrical housings **28**, **29**. Each plug **26**, **27** has a respective L-shaped flow passage **30**, **31** therethrough and each valve housing **28**, **29** is provided with three respective ports, spaced apart at 90° in the direction of rotation of the plug **26**, **27**, the central one of which communicates with a respective said conduit **21**, **22**, and the remaining two of which communicate respectively with fluid pressure inlet pipes **32**, **33** and with exhaust outlets **34**, **35** which vent to atmosphere. The valve plugs **26**, **27** are rotatable within their respective housings **28**, **29** by means of respective lever arms **36**, **37** between two settings, in the first of which the respective passages **30**, **31** provide communication between the respective conduits **21**, **22** and the respective inlet pipes **32**, **33**, and in the second of which the passages **30**, **31** provide communication between the respective conduits **21**, **22** and the respective exhaust outlets **34**, **35**.

The valve lever arms **36**, **37** are interconnected by a link **38** so that they are movable in unison, the valves **24**, **25** being so arranged that, when one valve **24** is in its first setting, the other valve **25** is in its second setting, and vice-versa. The two fluid inlet pipes **32**, **33** are connected to a common pressure fluid line **40**.

The valve means **23** are mounted close to the actuating rod **16**, the connecting link **38** extending parallel to and adjacent the rod **16**. Attached to the link **38** at two spaced apart positions are respective fixed arms **41**, **42** which project towards the rod **16** into the path of movement of a striker plate **43** affixed to the rod **16**.

Self-sustained operation of the pump **12** may be obtained simply by connecting the pressure fluid line **40** to a convenient source of fluid under pressure. Thus, assuming that the valves **24**, **25** are disposed initially in their first and second settings respectively, as shown in FIG. 1, the pressure fluid line **40** will be connected to the space **19** through pipe **32**, valve passage **30** and conduit **21**, while the space **20** will be connected to the exhaust outlet **35** through the conduit **22** and the valve passage **31**. The driving piston **17** will accordingly be moved in the sense of decreasing the volume of space **20**, that is, downwardly as viewed in FIG. 1, urging the actuating rod **16** downwardly. The actuating rod **16** flexes the diaphragm member **12** inwardly, increasing the pressure in the pump chamber and forcing fluid therefrom through the outlet non-return valve **14'**.

On completion of its pumping stroke the diaphragm member **12** is disposed in the position shown in broken lines at **12'**, the striker plate **43** having engaged the arm **41** and moved it to the position shown in broken lines at **43'**; this movement will have rotated the valve plug **26** and, through the connecting link **38**, the valve plug **27**, through 90°, so that the valves **24**, **25** are now disposed in the second and first settings respectively. Pressure fluid is now supplied to the space **20** through the pipe **33**, the valve passage **31** and the conduit **22**, while the space **19** is exhausted through the conduit **21**, the valve passage **30** and the exhaust outlet **34**. Assuming, therefore, that the inlet fluid pressure is sufficiently greater than atmospheric to produce a resultant upward force on the piston **17** notwithstanding the smaller area of said piston exposed to the fluid pressure in the space **20**, the piston **17** and actuating rod **16** will move in the opposite direction, that is, upwardly as viewed in FIG. 1. The diaphragm member **12** will be flexed outwardly, effecting an induction stroke of the pump **10** and drawing fluid into the chamber **11** through the inlet non-return valve **13'**. On completion of this induction stroke the diaphragm member **12** will be in the position shown in broken lines at **12''** and the striker plate **43** will have engaged the arm **42** and moved the latter to the position shown in full lines, the striker plate **43** occupying the position **43''**. The valves **24**, **25** are thereby returned to their first and second settings respectively, and reversal of the direction of movement of the driving piston **16** again takes place to effect a further compression stroke of the pump **10**.

It will be appreciated that, provided the ratio of the fluid pressure applied to the line **40** to atmospheric pressure is greater than the ratio of the larger to the smaller area sides of the piston **17** by an amount sufficient to overcome friction between the piston **17** and the walls of the cylinder **18**, the pumping apparatus will operate continuously, the pumping speed being dependent on the magnitude of the fluid pressure applied to the line **40**.

The pumping apparatus is incorporated in a combined pumping and cooling system as a portable, self-contained cooling unit. Such a unit, employing the pumping apparatus of FIG. 1, is illustrated in FIG. 2, in which the pumping apparatus is indicated generally at P and a cooler device at C.

Fluid pressure is applied to the inlet pipe **40** of the apparatus P from a sealed cylindrical vessel **50** containing solid carbon dioxide. The vessel **50** is located coaxially within a cylindrical jacket **51** of larger diameter, so that a cooling space **52** is defined between the jacket **51** and the vessel **50**. A respective inlet **53** and outlet **54** for a fluid to be cooled communicate with the interior of the jacket **51** at opposite ends thereof.

The fluid coolant, which conveniently is water containing an anti-freezing agent, is circulated in a closed circuit, including the cooling space **52** and an appliance to be cooled, by the pump **10**, the outlet **14** of the pump being connected to the inlet **53** of the jacket **51**. The appliance to be cooled comprises in this particular example a protective suit **55** provided with coolant channels **56** through which the water is circulated after passing through the space **52**.

The entire cooling and pumping unit is portable, most of the components of the pumping apparatus P and the cooler device C being made of lightweight metal such, for example as aluminium. Once charged with solid carbon dioxide the unit will operate continuously so long as, in practice, a minimum pressure of carbon dioxide of about 25 p.s.i. is maintained at the inlet pipe **40**. In a typical unit of this type, the vessel **50** was charged with a 7 lb. block of carbon dioxide and the pumping apparatus P maintained a rate of flow of coolant water through a suit **55** of 150 lbs. per hour for some 2 hours, the temperature difference between coolant water at the inlet to the unit and that at the outlet being 5° C. The total weight of this suit, including the initial carbon dioxide charge, was 35 lbs.

To facilitate replenishment of the carbon dioxide charge the vessel **50** is open at its upper end and provided with a quick-release cover plate **58** which seats on a continuous annular flange **59** provided externally of the vessel

50 at said open end, an annular sealing gasket 60 being disposed between the cover plate 58 and flange 59. The jacket 51 is also open at its upper end and provided at said end with a continuous external flange 61. The flange 59 of the vessel 50 is of sufficient radial extent to overlie the flange 61, an annular sealing gasket 62 being disposed between the flanges 59 and 61. A bar 63 extends diametrically across the top of the cover plate 58. The bar 63 is formed with integral C-shaped hooked ends 64 and a clamping screw 65 is threaded in a bore extending perpendicular to the bar 63 mid-way between the hooked ends 64. When the vessel 50 has been charged with carbon dioxide, the cover plate 58 is placed in position and the bar 63 then moved across the cover plate in a direction perpendicular to its length until it extends along a diameter of the plate 58, the hooked ends 64 being engaged behind the flange 59. The clamping screw 65 is then tightened, using a handwheel 65' so that it engages the cover plate 58 centrally, clamping both the plate 58 against the flange 59 and the flange 59 against the flange 61, and thereby sealing the cooler device C.

Although carbon dioxide is a particularly convenient cooling agent for the above-described application of the pumping unit, it will be appreciated that, in principle, other cooling agents, comprising either solidified or liquefied gases may be used, in conjunction with, of course, a suitable circulating coolant which does not freeze at the temperature of the cooling agent.

FIG. 3 illustrates an alternative embodiment of the invention, also designed for use as a self-contained portable cooling unit. The cooler device C is of the same construction as that of FIG. 2, and, as in the previous embodiment a coolant is circulated through the cooler device C and a suit 55 by a diaphragm pump 110.

In FIG. 3, however, the diaphragm pump 110 has a somewhat different construction to that of FIG. 1. The interior of the pump chamber is constituted by a concave recess 111 formed in a block of metal (for example, aluminium), the diaphragm member 112 extending across this recess 111 to seal the pump chamber. A pump actuating rod 116 attached to the diaphragm member 112 is provided adjacent to the diaphragm member 112 with a boss 115 which has a convex surface 115' facing the diaphragm member 112 and secured thereto on the axis of the rod 116. The convex surface 115' conforms exactly in curvature with the concave recess 111 of the pump chamber.

As in the embodiment of FIG. 1 the pump actuating rod is connected to a double-acting driving piston 117 mounted in a cylinder 118 and dividing the interior thereof into two spaces 119, 120. A stop 119' is mounted on the end wall of the cylinder 118 in the space 119 and a further stop 120' is attached centrally to the piston 117 in the space 120. The stops 119', 120' limit the travel of the piston 117 on the induction and pumping strokes of the actuating rod 116 respectively.

A cam disc 143 is mounted on the actuating rod 116 between the boss 115 and the cylinder 118, and two respective control valves 124, 125 having respective actuating plungers 141, 142 are disposed adjacent the rod 116 so that the ends of said plungers 141, 142, which are provided with cam follower balls 141', 142', are located in the path of movement of the edge of the cam disc 143 (which is rounded) at the respective positions occupied by the disc 143 at opposite ends of the stroke of the driving piston 117.

Each control valve 124, 125 is of identical construction, having a cylindrical housing 128, 129 in which a valve member 126, 127 is slidably mounted. Each valve member 126, 127 has two spaced apart lands which make sealing contact with the internal wall of the respective housing 128, 129 and which define between them an annular space 130, 131. The wall of the housing 128, 129 is provided with two axially spaced apart ports connected respectively to a fluid pressure inlet 132, 133 and to atmosphere through an outlet 134, 135, and intermediate these ports the said wall is provided with a port connected to a respective conduit 136, 137 leading to opposite ends of a cylindrical valve housing 138. Each valve member 126, 127 is urged by a spring 126', 127', in the housing 128, 129 into a position in which the respective actuating plunger 141, 142 is extended and the respective pressure inlet 132, 133 is closed, the conduits 136, 137 being connected to the respective outlets 134, 135.

A spool valve 139 is mounted for axial sliding movement in the housing 138. The spool valve 139 has four axially spaced apart lands 139' which make sealing contact with the internal wall of the housing 138 and which define three axial spaced annular recesses 144, 145, 146 on the spool valve. The total length of the spool valve 139 is less than that of the housing 138 so that the spool valve 139 may occupy either of two settings in which it is urged against one or the other end wall of the housing 138 in dependence on the relative fluid pressures in the conduits 136, 137. The axis of the valve housing 138 is disposed horizontally so that the spool valve 139 remains in the position to which it is moved by such relative fluid pressures after the pressures in the conduits 136, 137 have equalised.

Five axially spaced ports are provided in the cylindrical wall of the valve housing 138; disposed centrally of the housing 138 is a fluid inlet port 140' communicating with a pressure fluid line 140; two ports 121', 122' are arranged symmetrically on each side of the port 140', and outwardly of the ports 121', 122' two exhaust outlet ports 134', 135' open to the atmosphere, are provided. The ports 134', 140' and 135' are in permanent communication with the annular recesses 144, 145, 146 respectively in both settings of the spool valve 139. The two ports 121', 122' communicate with respective conduits 121, 122 which in turn communicate with the first and second spaces 119, 120 of the cylinder 118.

The fluid pressure inlets 132, 133 of the respective control valves 124, 125 are connected in parallel with the pressure fluid line 140 which is in turn connected to a sealed vessel 150 containing solid carbon dioxide as a gas-generating and cooling agent. Coolant comprising water with an anti-freezing agent added thereto is circulated by the pump 110 in a closed fluid circuit including in series a jacket 152 surrounding the vessel 150 and a fluid-cooled suit 155. The coolant circuit, which is shown in broken lines, is identical to that of FIG. 2 and will not, therefore be described in detail.

The mode of operation of the pumping apparatus of FIG. 3 will be apparent from the foregoing description. Assuming that the ports have an initial position as illustrated in which the driving piston 117 is at the extreme left-hand end of the cylinder 118, and against the stop 119', then the cam disc 143 will be in engagement with the control valve plunger 141 forcing the valve member 126 inwardly against the action of the respective spring 126' so that the exhaust outlet 134 is closed and carbon dioxide under pressure is supplied to the conduit 146 from the inlet 132 by way of the annular space 130. The other conduit 137 remains connected to atmospheric pressure through the space 131 and outlet 135 of the other control valve 125, and as a result the spool valve 139 is urged to the left-hand end of its housing 138 into a first setting as shown in which carbon dioxide under pressure is supplied to the space 119 through the line 140, the inlet 140', the annular recess 145, the port 121' and the conduit 121, while the space 120 is exhausted to atmosphere through the conduit 122, the port 122', the recess 146 and the outlet port 135'.

The driving piston 117 is therefore moved in the direction of decreasing the volume of the space 120, that is, to the right in FIG. 3, moving the boss 115 on the actuating rod 116 towards the recess 111 of the pump 110. The pumping stroke of the pump 110 continues, coolant being expelled through an outlet non-return valve 114', until the diaphragm member 112 rests in surface-to-surface

contact with the recess **111**, at which time the stop **120'** abuts the respective end wall of the cylinder **118**, as shown in broken lines.

On commencement of the pumping stroke, the cam disc **143** is moved by the actuating rod **116** out of engagement with the valve plunger **141**, so that the valve member **126** is returned by the spring **126'** to the position in which it connects the conduit **136** to atmospheric pressure through the space **130** and outlet **134**. Both conduits **136**, **137** are now at atmospheric pressure, and the resultant axial force on the spool valve **139** is therefore zero. Since, however, the spool valve **139** is disposed horizontally, it remains in the setting shown until the completion of the pumping stroke, as described above.

When the diaphragm member **112** rests on the recess **111** on completion of the pumping stroke, the cam disc **143** engages the control valve plunger **142** and thereby forces the valve member **127** into the housing **129** until the outlet **135** is closed and the conduit **137** put into communication with the pressure fluid line **140** through the annular space **131** and the inlet **133**. Carbon dioxide under pressure is now supplied to the left-hand end of the spool valve housing **138**, causing the latter to move rapidly to the right into a second setting in which the pressure fluid line **140** communicates with the space **120** through the recess **145** and the conduit **122**, while the space **119** is exhausted to atmosphere through the conduit **121** the space **144** and the outlet port **134'**.

The driving piston **117** is now returned to the left-hand end of the cylinder **118**, assuming of course that the carbon dioxide pressure is sufficiently greater than atmospheric pressure to move the piston **117** in this direction notwithstanding the smaller area of the piston **117** exposed to the pressure in the space **120**. The actuator rod **116** is moved to the left, pulling the diaphragm member **112** outwardly, so that coolant is drawn into the pump recess **111** through an inlet non-return valve **113'**. This induction stroke continues until the piston **117** encounters the stop **119'**, when the cam disc **143** will again engage and depress the valve plunger **141** to effect a changeover of the setting of the spool valve **139**, as described above.

The pump **110** is therefore operated continuously as long as the carbon dioxide pressure is maintained.

The pumping apparatus shown in FIG. 4 comprises a cylindrical housing **159** with a central, inwardly projecting annular flange **160**. Contained in the housing, and disposed co-axially therewith, is a movable actuator member comprising a central rod **161** carrying at opposite ends thereof disc elements **162** and **163**. The disc elements **162** and **163** are carried centrally in respective flexible diaphragms **164** and **165** whose outer edges are secured and sealed to the housing **159**. The disc element **162** has a downwardly projecting annular edge flange **166** which carries a rubber sealing ring **167**, and the disc element **163** has a corresponding upwardly projecting annular edge flange **168** carrying a rubber sealing ring **169**.

When the actuator member is in its uppermost position (shown in FIG. 4) the sealing ring **169** abuts the lower face of the flange **160** and seals off an exhaust port **170** provided therein, a further exhaust port **171** in the upper face of the flange **160** being open. When the actuator member is in its lowermost position the sealing ring **167** abuts the upper face of the flange **160** and seals off the port **171**, the port **170** then being open. The purpose of the ports **170** and **171** is explained later.

Secured to the housing **159** are upper and lower end plates **172** and **173** respectively. As can be seen from FIG. 4, the disc elements **162** and **163** and their associated diaphragms **164** and **165** effectively divide the interior of the housing **159** into three chambers sealed from each other, namely an upper chamber between the end plate **172** and the diaphragm **164**, a central chamber between the diaphragms **164** and **165**, and a lower chamber between the diaphragm **165** and the end plate **173**.

Coolant fluid to be pumped can enter the upper chamber through an inlet **174** having an associated non-return valve **175**, and can be pumped from the upper chamber through an outlet **176** having an associated non-return valve **177**. Gas under pressure can enter the lower chamber through an inlet **178**. The central chamber with which the ports **170** and **171** communicate, has a vent hole **179** leading to atmosphere.

A helical spring **180**, disposed between the flange **160** and the disc element **163**, urges the actuator member **161**, **162**, **163** downwardly.

In operation, the actuator member is urged downwardly in an induction stroke under the action of the spring **180**, thereby increasing the volume of the upper chamber and drawing fluid thereinto through the inlet **174**. Downward movement of the actuator member ceases when the sealing ring **167** abuts the flange **160**. Gas under pressure is then introduced into the lower chamber through the inlet **178** to move the actuator member upwardly (against the action of the spring **180**) in a pumping stroke. Such upward movement decreases the volume of the upper chamber, causing fluid therein to be pumped through the outlet **176**, and continues until the sealing ring **169** abuts the flange **160**. The actuator member then moves downwardly in a further induction stroke, the inlet **178** to the lower chamber then acting as an exhaust outlet.

The supply of gas under pressure to the lower chamber is controlled by a spool valve **181** mounted for axial sliding movement in a housing **182**. The valve **181** has three axially spaced apart lands **183** which make sealing contact with the internal wall of the housing **182** and which define two axially spaced annular recesses **184** and **185** on the spool valve. The valve **181** may occupy either of two settings in which it abuts one or the other of the housing end walls. The housing **182** has end ports **187** and **188** at which gas pressure can be applied to effect respective changes in setting of the valve **181**.

Three axially spaced ports are provided in the cylindrical wall of the housing **182**; disposed towards one end of the housing **182** is a gas inlet port **189** communicating with a gas pressure line **190**; a port **191** is disposed substantially centrally of the housing and communicates via a line **193** with the pump chamber inlet **178**; and an exhaust outlet port **194** is disposed towards the other end of the housing. When the valve **181** is in the setting shown in FIG. 4, the annular recess **185** provides a communication between the inlet port **189** and the port **191**. When the valve **181** is in its other setting, i.e. has been moved to the right as viewed in FIG. 4, the annular recess **184** provides a communication between the ports **191** and **194**.

The gas pressure line **190** forms one arm of a cross junction, the opposite arm of which comprises a pipe **196** communicating with a source of gas pressure indicated as **197**. A further arm of the junction is provided by a pipe **198**, having a restrictor **199**, and which communicates with a duct **200** in the pump housing **159** leading to the exhaust port **170**. The pipe **198** has a control outlet **201** forming a T junction and communicating with the end port **187** of the spool valve housing **182**. The fourth arm of the cross junction is provided by a pipe **202**, having a restrictor **203**, and communicating with a duct **204** in the pump housing **159** leading to the port **171**. The pipe **202** has a control outlet **205** forming a T junction and communicating with the end port **188** of the spool valve housing **182**.

At the end of a pumping stroke the sealing ring **169** blocks the port **170**, as shown in FIG. 4. Gas pressure from the pipe **198** is therefore applied at the control outlet **201** and hence at the end port **187** of the spool valve housing. Since the port **171** is at this time open gas can flow from the pipe **202** through the duct **204** and the port **171** into the pump's central chamber, and therefrom

through the vent hole **179**, so that no substantial pressure is applied at the end port **188** of the spool valve housing. The greater pressure at the end port **187** therefore effects a change of setting of the spool valve **181** by moving the latter to the right as viewed in FIG. 4. After such change of setting, the annular recess **184** provides a communication between the port **191** and the exhaust port **194**. The actuator member is moved downwardly under the action of the spring **180** in an induction stroke, and during such movement, gas from the lower chamber of the pump flows to exhaust through the inlet **178**, the port **191** and the exhaust port **194**.

At the end of the induction stroke the sealing ring **167** blocks the port **171**, the port **170** then being open. Gas pressure from the pipe **202** is therefore applied at the control outlet **205** and hence at the end port **188** of the spool valve housing. Since the port **170** is open gas can flow from the pipe **198** through the duct **200** and the port **170** into the pump's central chamber, and therefrom through the vent hole **179**, so that no substantial pressure is applied at the end port **187** of the spool valve housing. The greater pressure at the end port **188** therefore effects a change of setting of the spool valve **181** by moving the latter to the left as viewed in (and back to the position shown in) FIG. 4. After such change of setting, the annular recess **185** provides a communication between the inlet port **189** and the port **191**. Gas flows from the pressure line **190** to the port **191** and thence through the line **193** to the pump inlet **178**, so that the actuator member moves upwardly in a pumping stroke.

The values of the restrictors **199** and **203** in the pipes **198** and **202** respectively are chosen to maintain a sufficient pressure of gas flow through the pressure line **190** to effect the required pumping operation notwithstanding flow through the pipes **198** and **202**. It will be seen that during actual movement of the actuator member in a pumping stroke both of the ports **170** and **171** are open; the restrictors **199** and **203** present an impedance to the flow through these pipes from the pipe **196**, and thereby to maintain a sufficient pressure in the line **190** to effect the pumping stroke.

The source of gas pressure, indicated at **197** in FIG. 4, is provided by solid carbon dioxide which absorbs heat from the coolant fluid pumped round a circuit including channels in a protective suit, in essentially the same manner as previously described in relation to FIGS. 2 and 3.

It should be noted that the combined pumping and cooling systems described above are to some extent self-adjusting. Thus if the temperature of the coolant should increase, due to an increase in the heat to which the associated protective suit is exposed, the rate of sublimation of carbon dioxide (or other cooling agent) in the sealed vessel which acts as the source of fluid pressure for the pumping apparatus will increase. Consequently the gas pressure during the pumping apparatus will increase, thereby increasing the speed of operation of the pumping apparatus and, therefore, its pumping rate. The resulting increased rate of circulation of coolant will result in a lowering of the coolant temperature. The pumping rate will eventually adjust to a new level such that the temperature difference between the coolant at the inlet and that at the outlet of the protective suit is maintained substantially constant.

In a modified form of apparatus according to the invention, the diaphragm pump **10**, **110** in the embodiments of FIGS. 1 and 3 could be replaced by a positive displacement pump of the reciprocating piston type; similarly, a diaphragm member could be used in place of the driving piston **17**, **117**.

We claim:

1. A portable, self-contained pumping and cooling system for an appliance comprising a coolant flow passage adapted to form part of a cooling circuit extending through the appliance, a sealable vessel arranged in heat-exchange relationship with the coolant flow passage which is adapted to form part of a coolant circuit, said vessel being adapted to contain an evaporating refrigerant which releases pressure fluid upon absorption of heat, a fluid pressure-actuated reciprocating pump connected in the coolant circuit, said pump comprising a pump chamber having an inlet and an outlet respectively fitted with inlet and outlet non-return valves, a diaphragm member forming a movable wall of the pump chamber, which member has its edge secured to the peripheral wall of the pump chamber and is adapted to flex so as to change the effective volume of the pump chamber to draw fluid into the pump chamber through said inlet during the induction stroke of the pump and to discharge the fluid through said outlet during the pumping stroke, and an actuator member rigidly connected to said diaphragm member and housed in a second chamber and having a control connection to the vessel for supplying pressure fluid to move the actuator member to effect at least said pumping stroke of the pump, valve means in the control connection between the vessel and said second chamber and having two settings corresponding to the induction and pumping strokes of the pump, and changeover means effective to change the setting of the valve means cylically so that the moving members of the pump effect continuous reciprocation.

2. A system according to claim **1**, wherein the valve means has two fluid outlets to the second chamber and is operable to supply pressure fluid from the sealable vessel to the two outlets in turn thereby causing the actuator member to reciprocate and effecting the induction and pumping strokes of the pump.

3. A system according to claim **1**, wherein the changeover means is connected to the rigid connection means between the moving members of the pump and is effective automatically when the moving members of the pump are at the end of a stroke to change the setting of the valve means so that the pump commences the next stroke.

4. A system according to claim **1**, wherein a change of setting of the valve means is effected by the application of fluid pressure controlled by the changeover means, the changeover means being effective to provide a communication between said vessel and a fluid inlet associated with said valve means, at which inlet fluid pressure can be applied to effect a change of setting of the valve means.

5. A system according to claim **4**, wherein the valve means comprise a spool valve movable axially in a housing, the changeover means being effective to provide selectively a communication between said vessel and a fluid inlet at one end of said housing, and between said vessel and a fluid inlet at the other end of said housing, a change of setting of the valve means being effected by application of fluid pressure at the fluid inlet at the appropriate end of said housing to move the spool valve axially.

6. A system according to claim **1**, wherein spring means are provided to move the actuator member to effect the induction stroke of the pump.

7. A system according to claim **4**, wherein the changeover means comprise sealing means mounted for movement with the moving members of the pump and arranged to block an exhaust port when the moving members of the pump are at the end of a stroke, a duct providing communication between said exhaust port and said vessel, and having a control outlet communicating with said duct at which fluid pressure can be applied to effect a change of setting of the valve means, whereby when said exhaust port is blocked by the sealing means fluid pressure is applied at said control outlet to cause a change in setting of the valve means.

8. A system according to claim **7**, including a first duct having an exhaust outlet and communicating with a control outlet at which fluid pressure can be applied to change the valve means from a first setting to a second setting, and a second duct having an exhaust outlet and communicating with a control outlet at which fluid pressure can be applied to change the valve means from said

second setting to said first setting, said first and second ducts communicating with said vessel, and wherein the pump has associated therewith respective sealing means effective to block the exhaust outlets of said first and second ducts when the pump is respectively at the end of a pumping stroke and an induction stroke, so that fluid pressure is applied to the first and second control outlets alternately.

9. A system according to claim **1**, wherein said sealable vessel comprises a container for the evaporating refrigerant enclosed in a jacket which defines with the container said coolant flow passage.

10. A system according to claim **1**, wherein the appliance is a protective suit and wherein said coolant flow, passage that is in heat exchange relationship with the

vessel, is connected to coolant flow passages in the protective suit.

References Cited

UNITED STATES PATENTS

2,380,537	7/1945	McMechon	62—384
2,383,486	8/1945	Isenberg	62—384
2,760,345	8/1956	Woods	62—384
3,112,792	12/1963	Coleman	62—259

WILLIAM J. WYE, Primary Examiner

U.S. Cl. X.R.

62—384