(No Model.)

W. W. CUMNOCK.

PITMAN.

No. 368,519. Patented Aug. 16, 1887.

Fig. 1.

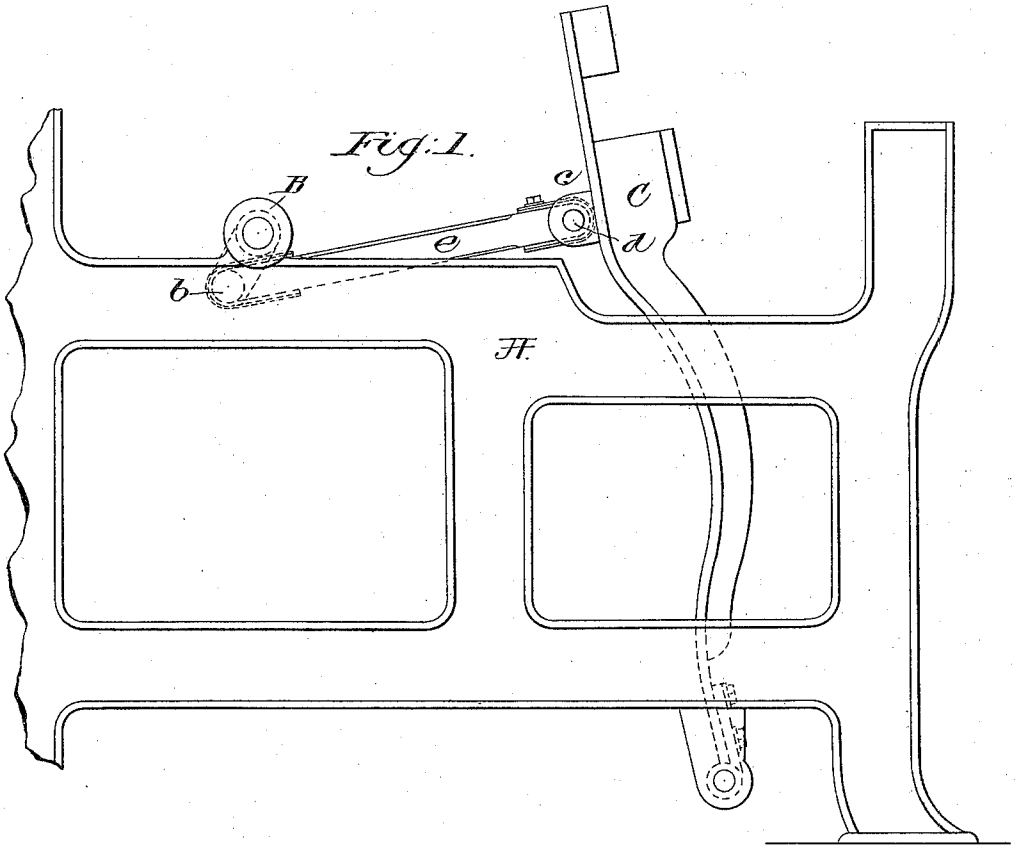

Fig. 3.

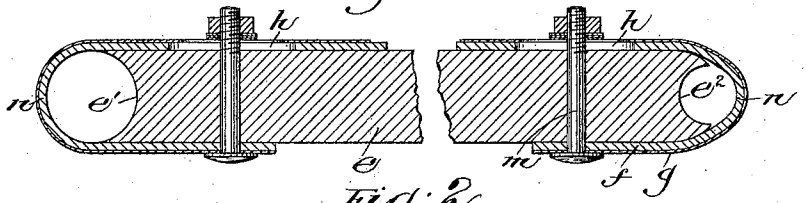

Fig. 2.

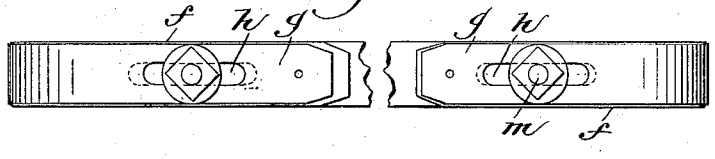

Witnesses.
Fred L. Emery.
John F. C. Pennington

Inventor.
Walter W. Cumnock.
By Crosby & Gregory Attys.

N. PETERS. Photo-Lithographer, Washington, D. C.

UNITED STATES PATENT OFFICE.

WALTER W. CUMNOCK, OF HENDERSON, KENTUCKY, ASSIGNOR OF ONE-HALF TO GEORGE DRAPER & SONS, OF HOPEDALE, MASSACHUSETTS.

PITMAN.

SPECIFICATION forming part of Letters Patent No. 368,519, dated August 16, 1887.

Application filed March 7, 1887. Serial No. 229,935. (No model.)

To all whom it may concern:

Be it known that I, WALTER W. CUMNOCK, of Henderson, county of Henderson, and State of Kentucky, have invented an Improvement in Pitmen, of which the following description, in connection with the accompanying drawings, is a specification, like letters on the drawings representing like parts.

This invention has for its object to simplify the construction of pitmen, and especially those employed between the crank-shaft and lay of a loom.

The crank-shafts of modern looms are run very rapidly, and as a result thereof the loops at the sides of the pitmen are subjected to great wear, and soon become loose, which is not only objectionable in weaving, but is also objectionable because of noise.

Prior to my invention it has been common to employ pitmen composed each of a connecting-link having a semicircular concavity at each end, the said links having attached to them near each end a piece of leather, rawhide, or other similar strong fibrous material, to co-operate both with the crank of the crank-shaft and with a bolt attached to the lay; but the leather soon becomes saturated with oil and wears or stretches, and great difficulty is experienced in adjusting them.

In accordance with my invention I have re-enforced the leather or equivalent straps by means of a metal strap, and have combined with the metal straps locking devices to hold them in adjusted position.

My invention consists, essentially, in a pitman composed of a connecting-link having at each end a non-metallic flexible or leather strap and a re-enforcing metal strap, both made adjustable with relation to the link to compensate for wear.

Figure 1 in side elevation represents a sufficient portion of a loom to enable my invention to be understood. Fig. 2 is a top or plan view, on a larger scale, of the pitman removed from the loom; and Fig. 3 is a longitudinal section of Fig. 2, the link being partially broken out.

The frame-work A, the rotating crank-shaft B, having the crank *b*, the lay C, having the ears *c*, and the pin or bolt *d*, are and may be all as usual. The connecting-link *e*, forming part of the pitman, and which may be of wood or any other usual material, has its opposite ends grooved or concaved to form semicircular spaces, the space e' receiving one-half of the crank part *b* of the crank-shaft, the space e^2 receiving one-half of the circumference of the bolt *d*.

The link *e* at each end has attached to it not only a strap composed of leather, rawhide, or similar strong fibrous material, as *f*, but also a re-enforcing strap, as *g*, of thin sheet metal—such, for instance, as hoop-iron—both the said straps *f* and *g* being slotted, as at *h*, to receive a locking device.

The locking device herein shown is a bolt, *m*, it being extended through the two straps and the link, as represented in Fig. 3, where it will be seen that the head of the bolt holds one end of both straps and that the other or opposite end of the straps may be adjusted by reason of the slots *h*, so as to keep the portions *n* of the strap *f* pressed closely in contact with the crank part *b* and the bolt *d*.

I claim—

1. The pitman composed of the link *e*, having a leather or fibrous strap and a metallic strap located at each end thereof, and locking devices to hold the said straps, substantially as described.

2. The pitman composed, essentially, of the link *e*, a fibrous and a non-metallic strap at each end of the link, both the said straps being slotted, as described, and with locking devices to adjustably connect the said straps to the link, as and for the purpose set forth.

In testimony whereof I have signed my name to this specification in the presence of two subscribing witnesses.

WALTER W. CUMNOCK.

Witnesses:
S. K. SNEED,
WM. H. STITES.