(12) INTERNATIONAL APPLICATION PUBLISHED UNDER THE PATENT COOPERATION TREATY (PCT)

(19) World Intellectual Property Organization
International Bureau

(43) International Publication Date
28 November 2013 (28.11.2013)

WIPO | PCT

(10) International Publication Number
WO 2013/175489 A1

(51) International Patent Classification:
B01J 10/00 (2006.01) *B01J 19/18* (2006.01)
B01F 5/22 (2006.01) *B05B 3/10* (2006.01)
B01J 19/00 (2006.01) *C07C 51/265* (2006.01)

(21) International Application Number:
PCT/IN2013/000214

(22) International Filing Date:
1 April 2013 (01.04.2013)

(25) Filing Language: English

(26) Publication Language: English

(30) Priority Data:
1207/MUM/2012 13 April 2012 (13.04.2012) IN

(71) Applicant: **RELIANCE INDUSTRIES LIMITED** [IN/IN]; 3rd Floor, Maker Chamber-IV, 222, Nariman Point, Mumbai 400 021, Maharashtra (IN).

(72) Inventors: **GHADGE, Rajaram, S.**; C 5/27, 1st Floor, Flat No.2, Sector 12, New Panvel, New Mumbai 410 206, Maharashtra (IN). **MATHEW, Thomas**; 7 A Nandanvan CHS, Sector-17, Nerul, New Mumbai 400 706, Maharashtra (IN).

(74) Agent: **MOHAN, Dewan**; R. K. Dewan & Company, Trade Mark & Patent Attorneys, Podar Chambers, S.A.Brelvi Road, Fort, Mumbai 400 001, Maharashtra (IN).

(81) Designated States *(unless otherwise indicated, for every kind of national protection available)*: AE, AG, AL, AM, AO, AT, AU, AZ, BA, BB, BG, BH, BN, BR, BW, BY, BZ, CA, CH, CL, CN, CO, CR, CU, CZ, DE, DK, DM, DO, DZ, EC, EE, EG, ES, FI, GB, GD, GE, GH, GM, GT, HN, HR, HU, ID, IL, IN, IS, JP, KE, KG, KM, KN, KP, KR, KZ, LA, LC, LK, LR, LS, LT, LU, LY, MA, MD, ME, MG, MK, MN, MW, MX, MY, MZ, NA, NG, NI, NO, NZ, OM, PA, PE, PG, PH, PL, PT, QA, RO, RS, RU, RW, SC, SD, SE, SG, SK, SL, SM, ST, SV, SY, TH, TJ, TM, TN, TR, TT, TZ, UA, UG, US, UZ, VC, VN, ZA, ZM, ZW.

(84) Designated States *(unless otherwise indicated, for every kind of regional protection available)*: ARIPO (BW, GH, GM, KE, LR, LS, MW, MZ, NA, RW, SD, SL, SZ, TZ, UG, ZM, ZW), Eurasian (AM, AZ, BY, KG, KZ, RU, TJ, TM), European (AL, AT, BE, BG, CH, CY, CZ, DE, DK, EE, ES, FI, FR, GB, GR, HR, HU, IE, IS, IT, LT, LU, LV, MC, MK, MT, NL, NO, PL, PT, RO, RS, SE, SI, SK, SM, TR), OAPI (BF, BJ, CF, CG, CI, CM, GA, GN, GQ, GW, ML, MR, NE, SN, TD, TG).

Declarations under Rule 4.17:

— *as to the identity of the inventor (Rule 4.17(i))*

— *of inventorship (Rule 4.17(iv))*

Published:

— *with international search report (Art. 21(3))*

— *before the expiration of the time limit for amending the claims and to be republished in the event of receipt of amendments (Rule 48.2(h))*

(54) Title: A MULTI-PHASE REACTOR SYSTEM WITH SLINGER LIQUID REFLUX DISTRIBUTOR

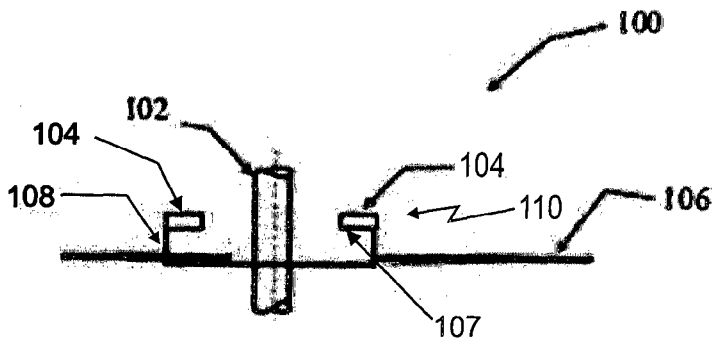

(57) Abstract: A multi-phase reactor system for performing multi-phase reactions is disclosed. The reactor system includes a reaction vessel having a slinger device (100) mounted on a centrally positioned agitator shaft (102) proximal to an operative top of the reaction vessel. The slinger device (100) comprises a holding means defined by a vertical circumferential plate (108) and a cover plate (107) for at least partially encasing the agitator shaft (102) to define a space for collecting a liquid. The holding means comprise at least one spraying means including spray pipes (106) for distributing the liquid on an inner wall of the reaction vessel by a projectile trajectory path on rotation of the agitator shaft. A concave blade (104) may be positioned over the cover plate (107) for preventing overflow of the liquid from the holding means and forming an umbrella of the flowing liquid to effect scrubbing of the vapors and off-gas.

WO 2013/175489 A1

A MULTI-PHASE REACTOR SYSTEM WITH SLINGER LIQUID REFLUX DISTRIBUTOR

FIELD OF DISCLOSURE

The present disclosure relates to multi-phase reactor systems for performing gas-liquid or gas-liquid-solid reactions and methods for conducting the reactions thereof.

BACKGROUND

A majority of the chemical reactions demand the configuration of the reactor system such as to provide high rate of production, selectivity towards the desired product, and negligible production of intermediate products and byproducts. Multi-phase reactor systems are specially designed for performing gas-liquid or gas-liquid-solid reactions. These reactor systems typically comprise a reaction vessel including baffles and agitation devices such as impellers, and are therefore commonly referred to as "stirred tank reactors" or "STR". Often, the reaction vessels also include gas spargers to disperse a gas into a bulk liquid medium. These multi-phase reactor systems are commonly used in fermentation, hydrogenation, phosgenation, neutralization, chlorination and oxidation reactions, where it is necessary to make intimate contact between the liquid and gas phase constituents to achieve the desired yield and production rate. Further, the reliable operation of these systems largely depends upon proper flow distribution and fluid dynamic behavior.

The configuration and geometry of the reaction vessel, impellers and gas spargers is mainly governed by the degree of homogeneity, required rate of mass transfer, solid suspension, and power consumption. Sometimes the nature of the chemical reaction demands auxiliary equipment or vessel internals like vessel jacket, internal heating or cooling coils and slinger devices.

Generally, in the gas-liquid or gas-liquid-solid reactions, gas is sparged at the bottom of the reaction vessel and feed is charged from the vessel top or middle. The unreacted gas leaves from the top liquid surface into an overhead system. This gas generally carries liquid droplets to the overhead system which causes fouling and corrosion in the overhead system. In exothermic reaction process, the heat of the reaction continuously boils the reactor liquid or the reaction medium which gets vaporized to maintain the required reaction temperature. These vapors also carry liquid droplets to the overhead system. In three-phase reactions, suspended solids from the reaction medium are also carried over by these vapors or unreacted gas to the overhead system causing solid built-up in the overhead system and solid deposition on the inner wall of the vessel headspace. Under these circumstances slinger devices are provided. In the known multi-phase reactor systems, a slinger device is provided near the operative top of the reaction vessel, typically on the agitator shaft of the reaction vessel, to spray a recycle liquid and/or fresh liquid over the free liquid surface of the reaction vessel and the vessel inner wall. The spraying of the liquid reduces both wall fouling and condenser plugging by washing the inner wall of the reaction vessel and scrubbing the gas leaving the reaction vessel.

An example of such multi-phase reaction is the oxidation of aromatic alkyls (e.g. p-xylene) within a liquid phase reaction medium, for e.g. the process of manufacturing terephthalic acid from p-xylene. In this process air is sparged through nozzles provided near the tip of the axial flow impellers in a reaction medium of solvent, catalyst, initiators and p-xylene. Heat generated by the exothermic oxidation reaction is dissipated by the vaporization of the solvent and the water produced by the oxidation of p-xylene. The temperature in the reaction vessel is controlled by the vaporization of the solvent and water and by recycle of the condensate stream of the overhead vapors. Crude terephthalic acid is recovered from the reaction product by crystallization and filtration.

Most of the terephthalic acid crystals is suspended within the liquid phase and can build-up on the walls of the reaction vessel. This causes reduction in the operating volume of the reactor, decreases the residence time of the reaction, and results in the formation of intermediate byproduct. Vaporization of the solvent from the reaction vessel can also carry fine solid particles to the overhead condenser system which leads to plugging of the overhead condenser tubes. The uneven heating and cooling of the reaction vessel wall also causes a thermal stresses at the vessel shell and can lead to shell leak. In such continuous boiling oxidation reaction vessel of a terephthalic acid manufacturing plant, condensate stream of the overhead vapors is fed back to the reaction vessel through a top and bottom reflux line. The objective of top reflux is to wash the reaction vessel wall to avoid any solid deposition and scrub the vapors containing solid particles entering into the overhead condenser system. The objective of the bottom reflux is to increase the conversion of p-xylene to terephthalic acid and reduce the acetic acid burning by reducing the severity of reaction vessel.

However, the conventional slinger devices consist of rotating, flat circular disks comprising multiple vertically raised straight vanes extending radially outward from a center hub of the disc to its outer periphery. The condensate is returned to the reaction vessel via a conduit located above the slinger device. The condensate is fed onto the slinger device from where it is subsequently distributed radially outward about the reaction vessel. These slinger devices, which are located in the upper "head space" section of the vessel, cover only a portion of the reaction vessel cross-section, and are therefore incapable of completely eliminating the above-mentioned problems. Some of such traditional slinger devices are disclosed in the prior art below.

US4422626 discloses an apparatus for building-up and repairing a refractory lining of an industrial furnace. The apparatus consisting of a rotary disc centrifugally throwing particulate refractory material against a portion of the lining to be repaired and comprising a horizontal row of hollow bolts with bores to spray water into an inlet conduit of annular cross section whereby the material passing through the conduit to the disc will be uniformly wetted.

WO2008036370 discloses a liquid-gas phase reactor system comprising a slinger secured to a drive shaft extending through at least a portion of an upper section of a reaction vessel and located below a first liquid inlet, wherein the slinger comprises an upper horizontal surface including a plurality of vertically raised vanes extending radially outward along a curved path.

A major shortcoming of the known slinger devices is that a large portion of the condensate is distributed only over a limited cross-section of the reaction vessel with very little condensate actually reaching the reactor walls. Another shortcoming is that liquid tends to be distributed in large droplets rather than finely divided droplets. This results in solid carryover in the overhead condenser system and also solid deposition on the reactor wall. Consequently, such systems experience wall fouling, condenser plugging, and poor mixing of condensate with the liquid phase reaction medium. Moreover, the known slinger devices are less effective at dissipating heat generated by the exothermic reactions. For example, with the exothermic oxidation of aromatic alkyls, much of the heat generated by the reaction is concentrated in the middle section of the liquid reaction medium. The hot spots can lead to undesired reactions, consumption of solvent and increased vapor generation; all of which contribute to higher operating costs and lower efficiency. Further, the uneven heating and cooling of the reaction vessel wall can produce thermal stresses at the vessel wall which can cause the shell leakage.

There is therefore felt a need to provide an improved slinger device for use in a multi-phase reactor system, which will overcome the afore-mentioned shortcomings of the known slinger devices by spreading the reflux (condensate) liquid uniformly about the inner walls of reaction vessel and optimizing the top reflux quantity as per the process requirements.

OBJECTS

Some of the objects of the present disclosure, which at least one embodiment herein satisfies, are as follows:

It is an object of the present disclosure to ameliorate one or more problems of the prior art or to at least provide a useful alternative.

Accordingly, an object of the present disclosure is to provide an improved slinger device for a multi-phase reactor system which minimizes solid build-up in the overhead system and solid deposition on the inner shell wall of the reaction vessel headspace by cleaning the inner shell wall of solid deposits and scrubbing the solid particles from outgoing vapors and off-gas, thereby reducing both inner shell fouling and overhead system plugging to enhance the reactor operational life.

Another object of the present disclosure is to provide a slinger device for a multi-phase reactor system which spreads the liquid and/or the liquid reflux uniformly at 360° on the inner shell wall of the reaction vessel in the vapor space.

Yet another object of the present disclosure is to provide a slinger device for a multi-phase reactor system which optimizes the top reflux quantity as per the process requirements.

Other objects and advantages of the present disclosure will be more apparent from the following description when read in conjunction with the accompanying figures, which are not intended to limit the scope of the present disclosure.

SUMMARY

In accordance with the present disclosure, there is provided a multi-phase reactor system for performing multi-phase reactions, the reactor system including a reaction vessel having a slinger device mounted on a centrally positioned agitator shaft proximal to an operative top of the reaction vessel, wherein the slinger device comprises a holding means defined by a vertical circumferential plate and a cover plate at least partially encasing the agitator shaft to define a space for collecting a liquid, the holding means being provided with at least one spraying means for distributing the liquid on an inner wall of the reaction vessel by a projectile trajectory path on rotation of the agitator shaft.

Typically, in accordance with the present disclosure, the holding means is provided in operative communication with a liquid inlet to receive the liquid.

Typically, the slinger device rotates synchronously with the agitator shaft.

Preferably, in accordance with the present disclosure, the spraying means comprise at least one spray pipe provided on the vertical circumferential plate.

Typically, in accordance with the present disclosure, the spraying means comprise a plurality of equally spaced circumferential tubes provided on the vertical circumferential plate, the circumferential tubes being adapted for

forming an umbrella of the liquid for scrubbing the vapors generated during the reaction off solids before exiting the reaction system.

Preferably, in accordance with the present disclosure, the circumferential tubes have a smaller length than the spray pipe.

Alternatively, in accordance with the present disclosure, the spraying means comprise at least one concave blade provided on the cover plate, the concave blade being adapted for preventing overflow of the liquid and forming an umbrella of the liquid for scrubbing the vapors generated during the reaction off solids before exiting the reaction system.

Typically, in accordance with the present disclosure, the diameter of the slinger device is adapted to provide a vapor exit velocity from the reactor system in the range of 1 to 5 m/s.

In accordance with the present disclosure, there is disclosed a method for oxidizing an aromatic alkyl in a multi-phase reactor system, the method comprises the following steps:
introducing a liquid reaction medium comprising the aromatic alkyl and a solvent in a reaction vessel of the reactor system;
sparging air into the liquid reaction medium at a location proximal to an operative bottom of the reaction vessel to effect the oxidation which generates heat and causes vaporization of the liquid reaction medium;
condensing at least a portion of the vapors of the liquid reaction medium to generate a reflux liquid;
returning a first portion of the reflux liquid to the reaction vessel through a slinger device mounted on a centrally positioned agitator shaft proximal to an operative top of the reaction vessel for cleaning the inner wall of the reaction

vessel off solid deposits and scrubbing solid particles from outgoing vapors and off-gas, wherein the slinger device comprises a holding means defined by a vertical circumferential plate and a cover plate at least partially encasing the agitator shaft to define a space for collecting the reflux liquid, the holding means being provided with at least one spraying means for distributing the reflux liquid on the inner wall by a projectile trajectory path on rotation of the agitator shaft; and returning a second portion of the reflux liquid into the liquid reaction medium.

BRIEF DESCRIPTION OF THE ACCOMPANYING DRAWINGS

The present disclosure will now be described with the help of the non-limiting accompanying drawings, in which,

FIGURE 1A illustrates the schematic of a side-view of a first embodiment of the slinger device for a multi-phase reactor system;

FIGURE 1B illustrates the schematic of a top-view of the first embodiment of the slinger device for a multi-phase reactor system;

FIGURE 2A illustrates the schematic of a side-view of a second embodiment of the slinger device for a multi-phase reactor system;

FIGURE 2B illustrates the schematic of a top-view of the second embodiment of the slinger device for a multi-phase reactor system; and

FIGURE 3 illustrates the schematic of the slinger plate design.

DETAILED DESCRIPTION

The disclosure will now be described with reference to the embodiments which do not limit the scope and ambit of the disclosure. The description provided is purely by way of example and illustration.

The embodiments herein and the various features and advantageous details thereof are explained with reference to the non-limiting embodiments in the following description. Descriptions of well-known components and processing techniques are omitted so as to not unnecessarily obscure the embodiments herein. The examples used herein are intended merely to facilitate an understanding of ways in which the embodiments herein may be practiced and to further enable those of skill in the art to practice the embodiments herein. Accordingly, the examples should not be construed as limiting the scope of the embodiments herein.

The present disclosure envisages a multi-phase reactor system for performing multi-phase reactions, including gas-liquid or gas-liquid-solid reactions, preferably oxidation reactions of aromatic alkyls. The multi-phase reactor system comprises a reaction vessel, single or multiple impellers, gas or air spargers, a feed inlet and/or liquid inlet and a slinger device mounted on an agitator shaft. The slinger device installed on the agitator shaft is used to spread a liquid and/or a reflux liquid uniformly at 360° on the inner shell wall of the reaction vessel in the vapor space thereof, to keep the inner shell wall of the reaction vessel clean, and also scrub the solid particles carried in the off-gas and vapors conveyed from the reaction vessel.

The slinger device of the present disclosure ensures complete wetting and cleaning of the inner wall headspace of the reaction vessel and scrubbing of the

reaction vapors. The slinger device is mounted on the agitator shaft which is centrally positioned extending from operative top of the reaction vessel through at least a portion of operative length of the reaction vessel. The slinger device is positioned proximal to the operative top of the reaction vessel. The slinger device comprises a holding means which is formed by a vertical circumferential plate and a cover plate at least partially encasing the agitator shaft to define a space adapted to collect a liquid. The holding means is provided with at least one spraying means which are adapted to distribute the liquid from the holding means on the inner wall of the reaction vessel by a projectile trajectory path on rotation of the agitator shaft. The spraying means typically comprise at least one spray pipe mounted on the vertical circumferential plate. The spraying means may comprise a plurality of equally spaced circumferential tubes arranged on the vertical circumferential plate and having a length smaller than the spray pipe. The circumferential tubes may or may not be arranged in the same line as the spray pipe. The circumferential tubes are adapted to form an umbrella of the liquid for scrubbing the vapors generated during the reaction of solids such that only clean vapors and off-gas exit the reaction vessel. Alternatively, the spraying means may comprise at least one concave blade mounted on the cover plate. The concave blade prevents the liquid from the holding means from overflowing and is also adapted to form an umbrella of the liquid for scrubbing the vapors generated during the reaction of solids.

A portion of the agitator shaft is surrounded by the vertical circumferential plate and a doughnut-shaped cover plate is placed along the edge of the circumferential plate to define an annular space, between the agitator shaft and the circumferential plate, adapted to receive the liquid. The spraying means typically comprise at least one spray pipe mounted on the vertical circumferential plate. More than one equally spaced spray pipes having appropriate diameter and designed to provide sufficient clearance between the

inner wall of the reaction vessel and the discharge point of the pipes may be provided. These pipes are mounted on the circumferential plate of the slinger device to spray the liquid collected in the annular space on the inner wall of the reaction vessel. The spraying means may further comprise one or more equally spaced concave blades positioned on the cover plate of the slinger device. The concave blades have appropriate blade height and length equal to width of the cover plate. The spraying means may also comprise plurality of equally spaced circumferential tubes provided on the circumferential plate.

The multi-phase reactor system is suitable for oxidizing aromatic alkyls, e.g. p-xylene. A liquid reaction medium comprising the aromatic alkyl and a solvent, typically acetic acid, is charged in the reaction vessel of the multi-phase reactor. Air is sparged in the liquid reaction medium by means of gas spargers provided below the liquid level to provide a source of oxygen to initiate the oxidation reaction. The heat generated by the exothermic oxidation reaction is dissipated by the vaporization of the solvent and water produced by the oxidation of the aromatic alkyl. The vaporized solvent is condensed in an overhead condenser and less than 50% of the total condensate (reflux liquid) is recycled to the liquid reaction medium by means of the slinger device located at the operative top of the reactor vessel and more than 50% of the total condensate is returned to the reactor vessel through a bottom reflux line. The reactor system comprises a top reflux line which delivers the reflux liquid to the holding means via a liquid inlet of the slinger device.

Recycled liquid falling in the holding means is distributed over the liquid surface as well as over the inner wall of the reaction vessel. It is necessary to quantify the exact amount of liquid flow over the holding means and the flow through the rotating spray pipes and circumferential tubes to estimate the liquid velocity passing through it. The liquid spray over the inner wall of the reaction

vessel corresponds to the quantity of liquid that passes through the spray pipes. Remaining liquid is distributed over the liquid medium in the reaction vessel.

In stirred tank reactors speed of agitation is governed by the required power consumption per unit volume and mass transfer for the desired rate of reaction. As the slinger is mounted on the agitator shaft, it rotates with the given speed of the agitator. Therefore, the slinger device is required to be designed for the known speed of the agitator. The vapor or the unreacted gas leaving the free liquid surface of the reaction vessel flows through the region between the vessel wall and the slinger device. The velocity of this gas or vapor decides the diameter of the slinger device. The slinger device diameter is calculated such as to maintain the vapor exit velocity from the reaction vessel in an appropriate range typically 1 - 5 m/s.

The embodiments of the present disclosure are illustrated in the **FIG. 1** and the **FIG. 2** of the accompanying drawings.

FIGURE 1A of the accompanying drawings illustrates a side-view of a first embodiment of the slinger device of the present disclosure. The slinger device **100** typically in the form of a bucket comprises a vertical circumferential plate **108** and a cover plate **107** encasing a portion of an agitator shaft **102** to define holding means. An arrangement **110** includes a plurality of concave blades **104**(not specifically shown in the FIGURE 1A) placed over the cover plate **107**. The slinger device **100** rotates synchronously with the agitator shaft **102**. The slinger device **100** comprises spraying means including a plurality of spray pipes **106**. The reflux liquid is received in the holding means. The reflux liquid flows through the rotating spray pipes **106** and is distributed over the entire cross section area of the reaction vessel inner wall. The concave blades **104** prevent overflowing of the holding means. Further, the concave blades **104** are

adapted to form an umbrella of the flowing reflux liquid which scrubs the vapor and off-gas generated during the reaction of solids and thereby provides clean vapor and off-gas at the exit.

FIGURE 1B of the accompanying drawing illustrates a top-view of the first embodiment of the slinger device of the present disclosure. **FIG. 1B** shows an arrangement **110** that includes a plurality of concave blades **104** placed over the cover plate **107**. An open space is defined between the agitator shaft **102** and the arrangement **110** which allows the reflux liquid to flow in the form of an umbrella, this helps in scrubbing the vapors and off-gas generated during the reaction. The spray pipes **106** spread the reflux liquid at 360 °C on the inner wall of the reaction vessel.

FIGURE 2A of the accompanying drawings illustrates a side-view of a second embodiment of the slinger device of the present disclosure. The slinger device **200** comprises a vertical circumferential plate **214** and a cover plate **204** which encase a portion of an agitator shaft **202** to define holding means. The slinger device **200** comprises spraying means including a plurality of spray pipes **206** and a plurality of circumferential tubes **208, 210 & 212**. The plurality of circumferential tubes **208, 210 & 212** have equal diameter and length and are equi-spaced on the circumferential plate **214** of the slinger device **200**. The length of the circumferential tubes **208, 210 & 212** is smaller than the length of the spray pipes **206**. The plurality of the circumferential tubes **208, 210 & 212** may or may not be placed in-line with the spray pipes **206**. The reflux liquid is received in the holding means. The reflux liquid flows through the rotating spray pipes **206** and the plurality of circumferential tubes **208, 210 & 212** and is distributed over the entire cross section area of the reaction vessel inner wall. The plurality of circumferential tubes **208, 210 & 212** are adapted to form an umbrella of the reflux liquid for scrubbing the vapors generated during the

reaction of solids to provide clean vapors and off-gas at the exit of the reaction vessel.

FIGURE 2B of the accompanying drawings illustrates a top-view of the second embodiment of the slinger device of the present disclosure. **FIG. 2B** shows the holding means defined between the agitator shaft **202** and the cover plate **204**. The arrangement of the spray pipes **206** and the plurality of circumferential tubes **208, 210 & 212** on the circumferential plate **214** is clearly shown from the top-view.

The kinetic energy of the fluid at the exit of the spray pipe/tubes is the addition of energy created by the static head developed by the liquid from the holding means and energy due to the centrifugal force acting on the liquid. A centrifugal-force driven fluid flow in the rotating pipe/tubes is subjected to coriolis forces in addition to the pressure gradient in the circular pipe. The liquid velocity at the exit of the rotating pipe/tubes or rotating vessel is estimated by subtracting frictional losses in the rotating pipe/tubes and orifice from the total of static head and centrifugal force. When liquid is thrown out of the pipe or tubes with an initial liquid velocity it follows the projectile trajectory path. The liquid velocity at the exit of spray pipe/tubes decides the distribution pattern of liquid flowing over the open space of the reaction vessel cross section and the height at which majority of the liquid droplets are hitting the reactor inner wall. The liquid thrown with initial liquid velocity first travels into the vertical plane and then it moves into two-dimensions under the action of gravity and the friction offered by the upward vapor or gas. The time required for the liquid droplet to travel the distance between the slinger device and the vessel wall is estimated using the equation of motion by considering zero acceleration along the horizontal axis. The vertical distance at which the liquid droplet hit the wall is estimated using the equation of motion for the known travel time

under the influence of friction offered by vapor rise velocity and gravity. The velocity of the liquid leaving the spray pipe/tubes or slinger device is optimized by varying the number of pipes, the pipe diameter, the number of circumferential tubes, the size of the circumferential tubes and the number of concave blades, thereby identifying the required location at which the liquid droplet should hit the vessel wall.

An embodiment of the circumferential plate design is illustrated in the **FIG. 3** of the accompanying drawings. The slinger device **300** shows a circumferential plate **314** surrounding an agitator shaft **302** and having a plurality of equally spaced circumferential or spiral tubes **310** typically at a distance of 10 mm each. The circumferential velocity is estimated by orifice meter calculation and the place at which the liquid falls on the inner wall is estimated using a projectile equation. The velocity of the reflux liquid at the circumference of circumferential plate **314** is based on the centrifugal force exerted by the speed of agitation and the slinger diameter on the circumferential plate area. The % free area on the circumferential plate **314** varies with the number of tubes and their diameter. This is optimized in such a way that the reflux liquid will fall on the inner wall of the reaction vessel. Trajectories of the liquid jet will be uplifted by the vapor/gas flowing upward. Hence the liquid jet will meet the wall at higher elevation than calculated.

TECHNICAL ADVANTAGES

A slinger device for a multi-phase reactor system, as described in the present disclosure has several technical advantages including but not limited to the realization of: the slinger device provides a uniform spread of the reflux liquid at 360° along the inner shell wall of the reaction vessel; the slinger device scrubs solid particles in the off-gas and vapors conveyed from the reaction

vessel; and the slinger device optimizes the top reflux quantity as per the process requirements, whereby the surplus reflux can be diverted to the reaction vessel bottom to provide cold bottom reflux.

Throughout this specification the word "comprise", or variations such as "comprises" or "comprising", will be understood to imply the inclusion of a stated element, integer or step, or group of elements, integers or steps, but not the exclusion of any other element, integer or step, or group of elements, integers or steps.

The use of the expression "at least" or "at least one" suggests the use of one or more elements or ingredients or quantities, as the use may be in the embodiment of the disclosure to achieve one or more of the desired objects or results.

Any discussion of documents, acts, materials, devices, articles or the like that has been included in this specification is solely for the purpose of providing a context for the disclosure. It is not to be taken as an admission that any or all of these matters form part of the prior art base or were common general knowledge in the field relevant to the disclosure as it existed anywhere before the priority date of this application.

The numerical values mentioned for the various physical parameters, dimensions or quantities are only approximations and it is envisaged that the values higher/lower than the numerical values assigned to the parameters, dimensions or quantities fall within the scope of the disclosure, unless there is a statement in the specification specific to the contrary.

The foregoing description of the specific embodiments will so fully reveal the general nature of the embodiments herein that others can, by applying current

knowledge, readily modify and/or adapt for various applications such specific embodiments without departing from the generic concept, and, therefore, such adaptations and modifications should and are intended to be comprehended within the meaning and range of equivalents of the disclosed embodiments. It is to be understood that the phraseology or terminology employed herein is for the purpose of description and not of limitation. Therefore, while the embodiments herein have been described in terms of embodiments, those skilled in the art will recognize that the embodiments herein can be practiced with modification within the spirit and scope of the embodiments as described herein.

CLAIMS:

1. A multi-phase reactor system for performing multi-phase reactions, said reactor system including a reaction vessel having a slinger device mounted on a centrally positioned agitator shaft proximal to an operative top of said reaction vessel, wherein said slinger device comprises a holding means defined by a vertical circumferential plate and a cover plate at least partially encasing said agitator shaft to define a space for collecting a liquid, said holding means being provided with at least one spraying means for distributing said liquid on an inner wall of said reaction vessel by a projectile trajectory path on rotation of said agitator shaft.

2. The reactor system as claimed in claim 1, wherein said holding means is provided in operative communication with a liquid inlet to receive the liquid.

3. The reactor system as claimed in claim 1, wherein said slinger device rotates synchronously with the agitator shaft.

4. The reactor system as claimed in claim 1, wherein said spraying means comprise at least one spray pipe provided on said vertical circumferential plate.

5. The reactor system as claimed in claim 1, wherein said spraying means comprise a plurality of equally spaced circumferential tubes provided on said vertical circumferential plate, said circumferential tubes being adapted for forming an umbrella of said liquid for scrubbing the vapors generated during the reaction off solids before exiting said reaction system.

6. The reactor system as claimed in claim 3 & 4, wherein said circumferential tubes have a smaller length than said spray pipe.

7. The reactor system as claimed in claim 1, wherein said spraying means comprise at least one concave blade provided on said cover plate, said concave blade being adapted for preventing overflow of said liquid and forming an umbrella of said liquid for scrubbing the vapors generated during the reaction off solids before exiting said reaction system.

8. The reactor system as claimed in claim 1, wherein the diameter of said slinger device is adapted to provide a vapor exit velocity from said reactor system in the range of 1 to 5 m/s.

9. A method for oxidizing an aromatic alkyl in a multi-phase reactor system, said method comprising the following steps:

introducing a liquid reaction medium comprising the aromatic alkyl and a solvent in a reaction vessel of said reactor system;

sparging air into said liquid reaction medium at a location proximal to an operative bottom of said reaction vessel to effect the oxidation which generates heat and causes vaporization of said liquid reaction medium;

condensing at least a portion of said vapors of said liquid reaction medium to generate a reflux liquid;

returning a first portion of said reflux liquid to said reaction vessel through a slinger device mounted on a centrally positioned agitator shaft proximal to an operative top of said reaction vessel for cleaning the inner wall of said reaction vessel of solid deposits and scrubbing solid particles from outgoing vapors and off-gas, wherein said slinger device comprises a holding means defined by a vertical circumferential plate and a cover plate at least partially encasing said agitator shaft to define a space for collecting said reflux liquid, said holding means being provided with at least one spraying means for distributing said reflux liquid on said inner wall by a projectile trajectory path on rotation of said agitator shaft; and

returning a second portion of said reflux liquid into said liquid reaction medium.

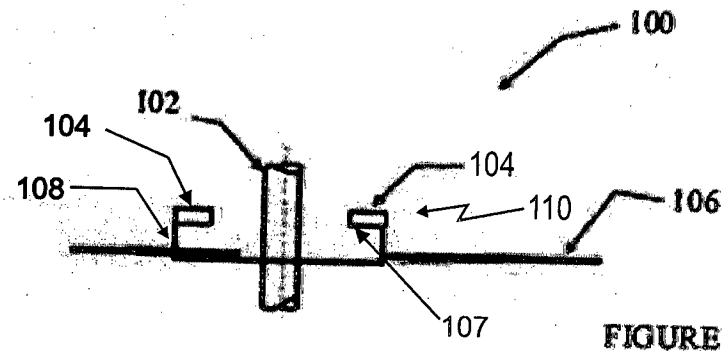

FIGURE 1A

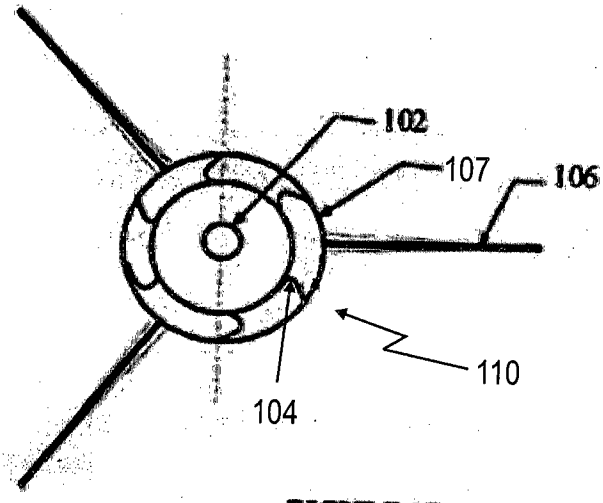

FIGURE 1B

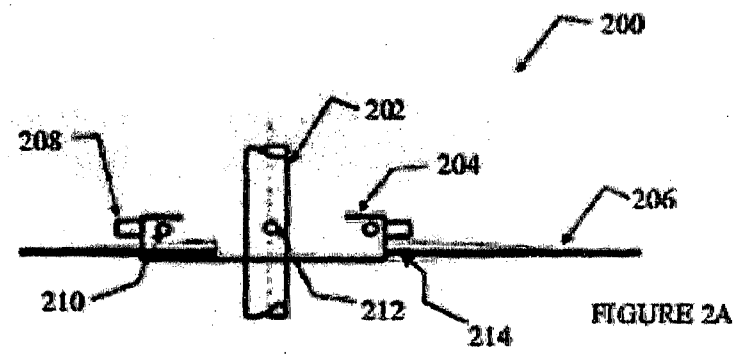

FIGURE 2A

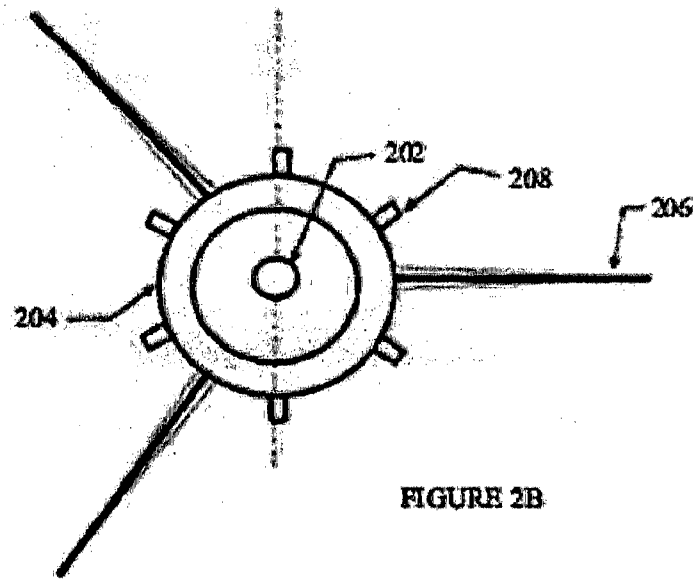

FIGURE 2B

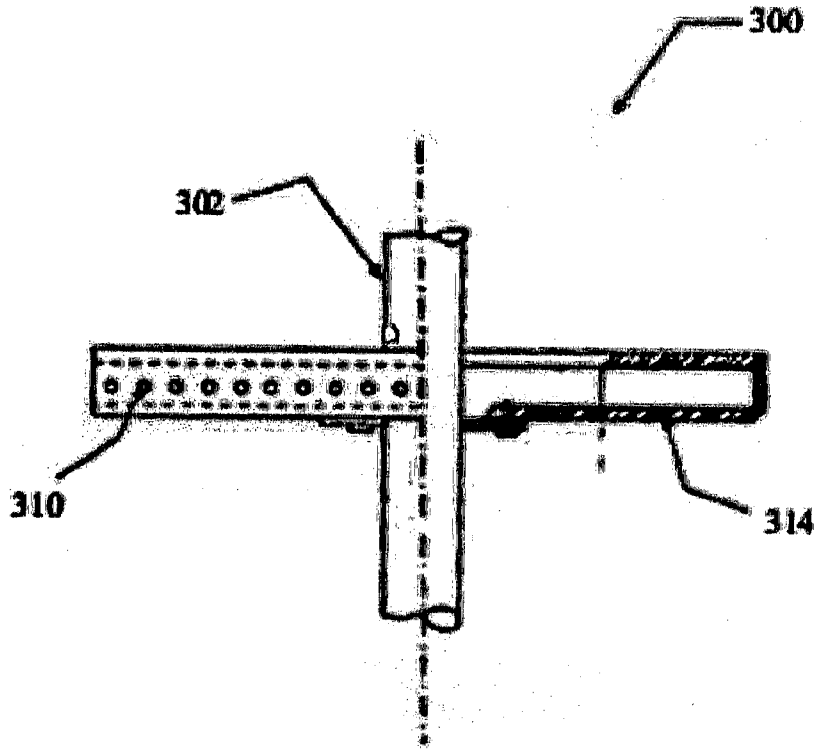

FIGURE 3

INTERNATIONAL SEARCH REPORT

International application No
PCT/IN2013/000214

A. CLASSIFICATION OF SUBJECT MATTER
INV. B01J10/00 B01F5/22 B01J19/00 B01J19/18 B05B3/10
C07C51/265
ADD.
According to International Patent Classification (IPC) or to both national classification and IPC

B. FIELDS SEARCHED

Minimum documentation searched (classification system followed by classification symbols)
B01J B01F B05B C07C

Documentation searched other than minimum documentation to the extent that such documents are included in the fields searched

Electronic data base consulted during the international search (name of data base and, where practicable, search terms used)
EPO-Internal, WPI Data

C. DOCUMENTS CONSIDERED TO BE RELEVANT

Category*	Citation of document, with indication, where appropriate, of the relevant passages	Relevant to claim No.
X	WO 2008/036370 A2 (DOW GLOBAL TECHNOLOGIES INC [US]; KAR KISHORE K [US]; PIRAS LUCIANO [I) 27 March 2008 (2008-03-27) cited in the application claims 11-15 page 4, line 75 - page 5, line 36 page 7, lines 5-35 page 8, lines 1-24 figures 1,3	1-9
X	US 2 917 241 A (WALDRUM JOHN E) 15 December 1959 (1959-12-15) column 1, lines 21-39 column 2, lines 32-67	1-8

-/--

[X] Further documents are listed in the continuation of Box C.

[X] See patent family annex.

* Special categories of cited documents :

"A" document defining the general state of the art which is not considered to be of particular relevance

"E" earlier application or patent but published on or after the international filing date

"L" document which may throw doubts on priority claim(s) or which is cited to establish the publication date of another citation or other special reason (as specified)

"O" document referring to an oral disclosure, use, exhibition or other means

"P" document published prior to the international filing date but later than the priority date claimed

"T" later document published after the international filing date or priority date and not in conflict with the application but cited to understand the principle or theory underlying the invention

"X" document of particular relevance; the claimed invention cannot be considered novel or cannot be considered to involve an inventive step when the document is taken alone

"Y" document of particular relevance; the claimed invention cannot be considered to involve an inventive step when the document is combined with one or more other such documents, such combination being obvious to a person skilled in the art

"&" document member of the same patent family

Date of the actual completion of the international search	Date of mailing of the international search report
24 October 2013	05/11/2013

Name and mailing address of the ISA/	Authorized officer
European Patent Office, P.B. 5818 Patentlaan 2 NL - 2280 HV Rijswijk Tel. (+31-70) 340-2040, Fax: (+31-70) 340-3016	Baumlin, Sébastien

1

Form PCT/ISA/210 (second sheet) (April 2005)

INTERNATIONAL SEARCH REPORT

International application No
PCT/IN2013/000214

C(Continuation). DOCUMENTS CONSIDERED TO BE RELEVANT

Category*	Citation of document, with indication, where appropriate, of the relevant passages	Relevant to claim No.
X	US 1 759 629 A (RILEY CHAMPLAIN L) 20 May 1930 (1930-05-20) page 1, lines 1-12,46-58,71-98 page 2, lines 2-41 figures 1,2	1-8
X	US 4 898 331 A (HANSEN OVE E [US] ET AL) 6 February 1990 (1990-02-06) column 3, line 61 - column 4, line 60 figures 1,2	1-8
X	FR 2 570 959 A1 (MOET & CHANDON [FR]) 4 April 1986 (1986-04-04) claims 7-13 figures 1,2,4a	1-8
X,P	WO 2012/163511 A2 (EKATO RUEHR MISCHTECHNIK [DE]; HIMMELSBACH WERNER [DE]) 6 December 2012 (2012-12-06) pages 1-3,7,8 figures 1a-1c,3,4a,4b	1-8
A	US 5 226 605 A (BAZERGUI CLAUDE [CA] ET AL) 13 July 1993 (1993-07-13) the whole document	1-9
A	US 5 389 310 A (LEIPONEN MATTI O [FI]) 14 February 1995 (1995-02-14) the whole document	1-9
A	CH 229 415 A (HENKEL & CIE GMBH [DE]) 31 October 1943 (1943-10-31) the whole document	1-9

1

INTERNATIONAL SEARCH REPORT

Information on patent family members

International application No
PCT/IN2013/000214

Patent document cited in search report	Publication date	Patent family member(s)	Publication date
WO 2008036370 A2	27-03-2008	BR PI0714998 A2	06-08-2013
		CA 2662647 A1	27-03-2008
		CN 101516490 A	26-08-2009
		EP 2069060 A2	17-06-2009
		JP 2010504201 A	12-02-2010
		JP 2013075292 A	25-04-2013
		KR 20090073188 A	02-07-2009
		RU 2009115209 A	27-10-2010
		TW 200825048 A	16-06-2008
		US 2011144384 A1	16-06-2011
		WO 2008036370 A2	27-03-2008
US 2917241 A	15-12-1959	NONE	
US 1759629 A	20-05-1930	NONE	
US 4898331 A	06-02-1990	AU 616329 B2	24-10-1991
		AU 4671189 A	28-06-1990
		DK 652789 A	23-06-1990
		EP 0375236 A2	27-06-1990
		US 4898331 A	06-02-1990
		ZA 8909465 A	26-09-1990
FR 2570959 A1	04-04-1986	NONE	
WO 2012163511 A2	06-12-2012	DE 102011102832 A1	06-12-2012
		TW 201304883 A	01-02-2013
		WO 2012163511 A2	06-12-2012
US 5226605 A	13-07-1993	EP 0590985 A2	06-04-1994
		US 5226605 A	13-07-1993
US 5389310 A	14-02-1995	AT 163868 T	15-03-1998
		AU 666775 B2	22-02-1996
		AU 4884693 A	28-04-1994
		CA 2108522 A1	17-04-1994
		DE 69317348 D1	16-04-1998
		DE 69317348 T2	02-07-1998
		EP 0593074 A1	20-04-1994
		FI 924717 A	17-04-1994
		JP 3184685 B2	09-07-2001
		JP H06198151 A	19-07-1994
		US 5389310 A	14-02-1995
CH 229415 A	31-10-1943	BE 445527 A	24-10-2013
		CH 229415 A	31-10-1943
		NL 64213 C	24-10-2013