June 13, 1939. J. C. LA GRUA 2,161,873

CONTAINER

Filed Feb. 10, 1937

Fig. 1

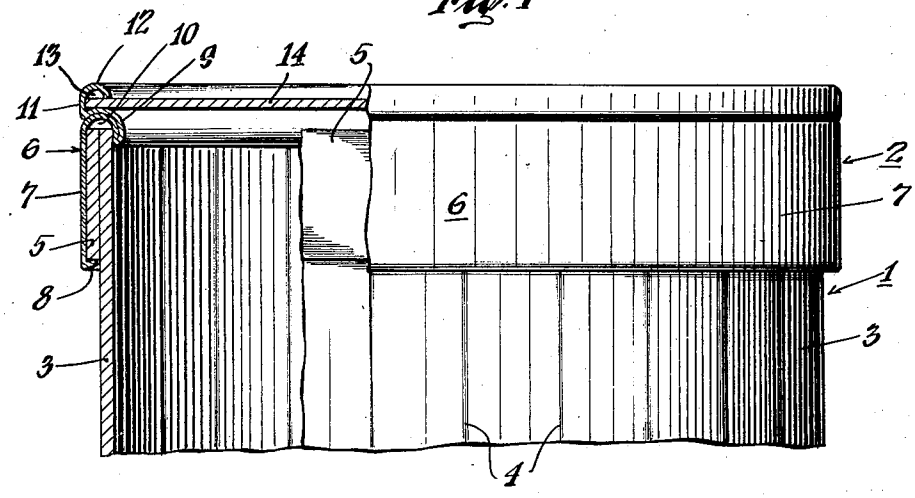

Fig. 2

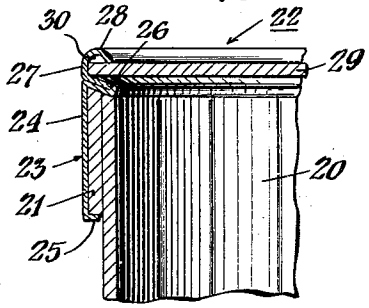

Fig. 3

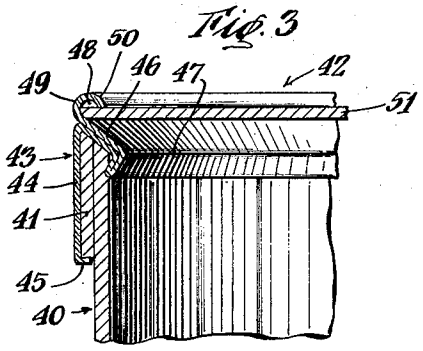

Fig. 4

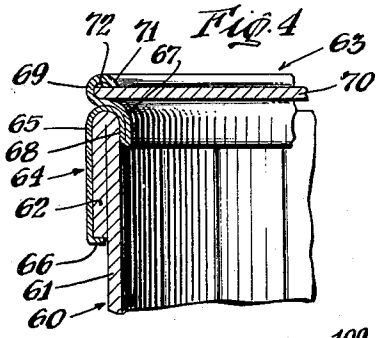

Fig. 5

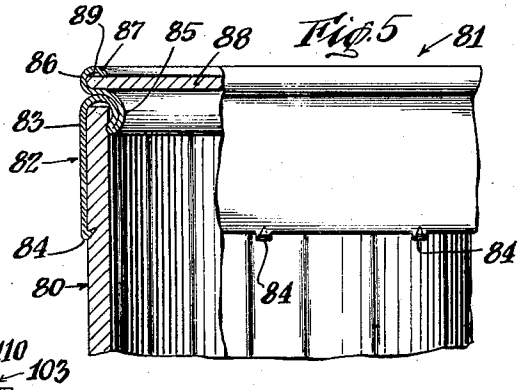

Fig. 6

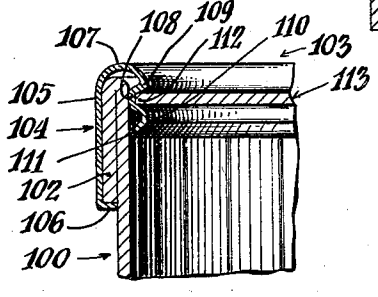

INVENTOR

James C. La Grua

BY

Albert M. Austin

ATTORNEY

Patented June 13, 1939

2,161,873

UNITED STATES PATENT OFFICE

2,161,873

CONTAINER

James C. La Grua, New Haven, Conn., assignor, by mesne assignments, to President and Directors of the Manhattan Company, New York, N. Y., as trustees

Application February 10, 1937, Serial No. 124,957

6 Claims. (Cl. 229—5.7)

This invention relates to containers, and more particularly to a container body formed of relatively flexible material having associated therewith a cover closure comprising an end piece and a rim in which the rim remains fixed and secured to the container body when the end piece has been removed.

Containers formed from paperboard have a tendency to collapse inwardly when the contents are in the process of being removed, due to the fact that this material is not sufficiently rigid to retain its shape. In accordance with this invention a cover is provided comprising a rim which telescopes over the open end of the body, and an end piece separable from the rim. The rim is so constructed as to firmly grip the container body and prevent movement of the body wall either inwardly or outwardly relative to the rim. The rim is sufficiently rigid to maintain the desired shape of the container body under the usual conditions of use. The end piece as well as the container body may be formed from paperboard or other material adapted for the purpose. My improved cover assembly finds particular usefulness in connection with container bodies which have been weakened, as by scoring to permit collapse of the body so that the same can be shipped and stored in substantially flat, compact condition. My improved cover is applied when the body has been expanded to its normal shape and the container filled with contents.

An object of the invention is to provide a container and cover assembly in which the cover serves to reinforce and strengthen the adjacent end of the container and prevent outward bulging or inward collapse of the adjacent portion of the container.

Another object of the invention is to provide a container and cover assembly wherein a portion of the cover may be removed to permit access to the container and another portion of the cover remains fixed on the container to reinforce and strengthen the latter and maintain the desired predetermined shape thereof.

Another object of the invention is to provide a container cover which can be economically and easily produced, which can be quickly and readily assembled on the container body and which permits ready access to the interior of the container.

Various other features and advantages of the invention will be apparent from the following particular description and from an inspection of the accompanying drawing.

Although the novel features which are believed to be characteristic of this invention will be particularly pointed out in the claims appended hereto, the invention itself, as to its objects and advantages, and the manner in which it may be carried out, may be better understood by referring to the following description taken in connection with the accompanying drawing forming a part thereof, in which:

Fig. 1 is a fragmentary side elevational view of the top portion of a container constructed in accordance with the present invention and illustrating one form of cover in association with a container body, certain of the parts being broken away to illustrate certain features of the construction;

Fig. 2 is a fragmentary cross-sectional view of a container and cover assembly of somewhat modified construction;

Fig. 3 is a fragmentary cross-sectional view of a container and cover assembly of further modified construction;

Fig. 4 is a fragmentary cross-sectional view showing still another modified form of cover and body construction;

Fig. 5 is a fragmentary cross-sectional view showing a still further modified form of cover and body construction; and

Fig. 6 is a fragmentary cross-sectional view of still another form of cover and body construction.

In the present application the invention is shown in connection with a container body formed from flexible paperboard material, such as is commonly employed in packaging ice cream or like materials. It is to be understood however, that the inventive concept herein disclosed is applicable to numerous shapes and forms of container bodies used in the packaging of liquid, semi-liquid, dry, granular or powdered materials.

Referring now particularly to Fig. 1, there is shown by way of example a container body 1, of generally cylindrical shape, having associated therewith a cover 2 adapted to telescope over the end of the container body 1 and to close one end such as the open end thereof. The container body 1 may be formed of a blank 3 of paperboard, or other suitable material, suitably scored as at 4, or otherwise creased, to permit the body to be collapsed in flat condition for storage or shipment. It is understood that the body may be formed of spiral wound paperboard which may or may not be scored to permit collapse thereof. The upper end of the container body 1 may be provided with a flange 5, formed, for

example of paperboard which may either be integral with or attached to the blank 3 whereby to provide an external flange serving both to reinforce the upper end of the container body 1 and to provide a flange for locking the cover 2 in closed sealed position. The bottom of the body 1 may be closed in any suitable manner, either by a cover similar to the cover 2 or otherwise.

The cover 2 preferably includes a rim 6, formed of metal or other relatively rigid material, and an end piece 14 secured to the rim 6 in a manner hereinafter more fully described. When the cover is in position on the container body, it extends over and closes the open end of the container body 1.

The rim 6 is formed with a side wall portion 7 which when the cover is assembled in the body, extends along the face of the flange 5. The side wall portion 7 terminates at its lower end in an inturned flange 8 adapted to engage the lower end of the container body 5.

Adjacent the upper end of the container body 1, the rim 6 is formed with a flange 9 which may be of arcuate shape and which extends across the upper edge of the container body 1 and engages the inner wall of the container adjacent the end thereof. Preferably the flange 9 is formed by folding the material of the rim in a flat reverse bend or fold. The folded inturned flange 9 provides a groove or recess 10 of sufficient thickness to receive the end of the container body 1 in wedging engagement, whereby the rim 6 firmly and tightly grips the container body 1 when the cover is applied.

The edge portion 11 of the rim 6, which extends beyond the folded flange 9 is rolled over to form a lip 12 which defines a groove or recess 13 adapted to snugly receive the end piece 14. The latter is wedgingly engaged between the extreme end of the rolled lip 12 and the upper wall of the folded flange 9.

The rim 6 may be formed by bending a flat elongated strip of suitable material to provide the desired cross-sectional shape which operation can be automatically performed on a draw bench or other device well known to the metal worker. The strip is then cut into segments of the desired length to form an endless member of circular shape or other suitable shape according to the cross-sectional shape of the container body. The end piece 14 is assembled with the rim 6, and if desired, the lip 12 may be crimped against the end piece 14 to more firmly lock it in position.

The cover is then applied to the container body 1 by telescoping the side wall 7 over the container body flange 5 until the inturned flange 8 engages under the lower end of the flange 5. During the latter portion of the telescoping movement, the upper end of the container body is wedged into the recess 10 and thus the cover 2 firmly grips the container body 1 and is locked thereon. Removal of the cover 2 is prevented by the inturned flange 8 and can only be accomplished by defacing or destroying either the container body 1 or cover 2 or both. Thus any attempt to remove the cover is made glaringly evident.

Entry into the container is desired and may be accomplished by removing as by tearing the end piece 14 outwardly from the rim 2. If desired the end piece 14 may be suitably scored to facilitate the removal. When the end piece 14 is removed, the rim 6 grips the container body in the same manner as before and prevents outward bulging or inward collapse of the latter. The rigid rim 6 not only maintains the shape of and reinforces the container body 1, but also serves as a guard to prevent tearing or fraying of the upper end of the container and also provides a convenient means for lifting the container about. The rim is so constructed that complete access to the container to remove the contents is not interfered with when the end piece 14 has been removed.

Various modifications may be made in the cross-sectional shape of the cover rim without departing from the spirit of the invention. Also, certain modifications may be made in the rim to adapt it for use with container bodies of somewhat different constructions than that shown in Fig. 1.

Referring now to Fig. 2, there is shown by way of example a container body 20 which may be formed generally similar to the container body shown in Fig. 2. The body 20 as here shown is provided with a flange 21, formed from a strip of material separately formed and thereafter attached to the body 1 by an adhesive or other suitable means. The cover 22 includes rim 23 formed of metal or other substantially rigid material and an end piece 29, preferably formed of paperboard.

The rim 23 includes a side wall 24 adapted to abut and extend along the container body flange 21 and is provided with an inturned portion or flange 25 adapted to engage the lower end of the container body flange 21. Extending inwardly from the upper end of the side wall portion 24 is a flange 26 which may be formed by a flat fold and which preferably is downwardly inclined from the outside toward the inside. The upper edge of the body flange 21 and the body 20 may be made downwardly inclined toward the inside of the container body thereby providing a wall corresponding in slope to the lower wall of the folded flange 26. Thus the body cooperates with the inturned flange 25 both to lock the rim securely on the container body 20 and to prevent inward collapse of the latter, inasmuch as the upper end portions of the container body and the body flange 21 are wedged against the lower surface of the folded flange 26.

The rim also has an edge portion 27 extending from the folded flange 26, which portion preferably is flush with the side wall portion 24 and is formed with an inwardly rolled lip 28, which forms with the portion 27 and the flange 26 a groove or recess 30. The end piece 29 is seated in the recess 30 and preferably abuts the inside face of the portion 27 and is gripped between the rolled edge 28 and the top wall of the edge portion 27 adjacent the base thereof.

The cover 22 may be formed and applied to the container body 20 in a manner substantially similar with that described in connection with the construction shown in Fig. 1. The rim 23 grips the container body 20 and flange 21 and prevents outward bulging as well as inward collapse. Preferably, the flange 26 terminates at or near the line of the inner face of the container body 20 and does not project into the mouth of the container.

Referring to Fig. 3 there is shown still another embodiment of the invention in which the cover rim is so formed as to prevent increased gripping effect on the container body, whereby to insure a firm and tight engagement between the cover and container body and to positively prevent any possibility of removing the cover without leaving visible evidence thereof.

The container body 40 may be formed in the manner generally similar to that above described and may have a body flange 41 secured thereto. The upper end edges of the container body 40 and flange 41 are beveled or inclined downwardly from the outside toward the inside of the container body.

The cover 42 includes a rim 43 formed of metal or similar relatively rigid material, the rim having a side wall portion 44 adapted to telescope over the flange 41. The lower end of the portion 44 is inturned to form a flange 45 adapted to engage under the lower end of the flange 41. The rim 43 is formed with a double folded stay portion or flange 46 preferably projecting inwardly and inclined downwardly. The stay portion 46 is provided with an edge portion 47 bent at substantially right angles to the main portion of the flange 46 and adapted to engage the inner wall surface of the container body 40 at or slightly below the top end edge thereof. Preferably, the space between the end of the bent edge portion 47 and the wall portion 43 is such that, when the cover is applied to the container body 40 the latter is gripped tightly by the rim 43 and the edge portion 47. The edge 47 may, if desired, be formed to bite into the body when the cover is in position on the body.

An edge portion 49 extending substantially in alignment with the side wall portion 43 is connected in an inwardly rolled lip 50 which defines a groove or recess 48 adapted to receive an end piece 51. The lip portion 50 is spaced relatively to the base of the flange 46 so as to firmly grip the end piece 51 when the same has been inserted and thus maintain the end piece 51 in position over the end of the container body 40.

The construction shown in Fig. 3 may be formed and assembled in the same general manner as those hereinbefore described. The cover 42 operates to reinforce and strengthen the adjacent end of the container body 40 both when the cover is serving to close the container and after the end piece 51 has been removed.

Referring to Fig. 4, there is shown a construction wherein the container body 60 is formed by a blank 61 having a portion rolled outwardly and folded against the blank 61 to form an integral flange 62. A cover 63 is provided and includes a rim 64 and an end piece 70 assembled therewith.

The rim 64 has a side wall portion 65 adapted to lie against the flange 62 and an inturned flange 66 adapted to engage the lower end of the body flange 61. The rim 64 is formed with a folded flange 67 of such shape as to fit over the end portion of the container body 60. The flange 67 is extended downwardly along the inner wall of the body 60 so that an edge portion 68 lies against the inside face of the body 60. Preferably, the space between the side wall 65 and the flange portion 68 is just sufficient to snugly accommodate the corresponding portion 62 of the container body 60. If desired, the portion 68 may be bent slightly toward the side wall portion 65 whereby to exert a pinching action on the body 60 when the cover is assembled therewith.

The edge portion 69 of the rim which extends beyond the flange 67 is rolled inwardly to form a lip 71 which defines a groove or recess 72 adapted to receive the end piece 70. The end piece 70 may be inserted and securely held in the recess 72 until it is desired to open the container.

It will be noted that in the several forms of the invention thus far described, the container body is provided with a flange adjacent its upper end and the cover rim is formed with an inturned lip or flange adapted to engage under the lower end of the body flange. The present invention is also adapted for use with a container body having no top rim or flange.

One example of a construction of this type is illustrated in Fig. 5, to which reference is now made. A container body 80 having no retaining flange is provided and a cover 81 assembled therewith and secured thereto in a manner which will present appear.

The cover 81 is formed by a rim 82 and an end piece 88 which preferably are assembled to form a cover before applying same to the container body. The rim 82 is formed with a side wall portion 83 and is provided preferably along its lower edge with a series of spaced teeth or prongs 84 adapted to bite into the adjacent wall of the container body 80 whereby to lock the cover 81 on to the container body 80. If desired, the teeth 84 may be inclined upwardly, as indicated in Fig. 5.

The rim 82 is formed with an arcuate folded flange 85 adapted to extend over the top end of the container body 80 and engage the inner wall thereof adjacent the top end. The space between the inner end of the flange 85 and the adjacent portion of the side wall 83 is such that the container body 80 fits snugly therebetween. If desired, the flange 85 may be so formed that the end thereof bites into the container wall.

The edge portion 86 of the rim which extends beyond the folded flange 85 is formed with an inwardly rolled lip 87 to provide a seat 89 for the end piece 88 in a manner substantially similar to that previously described.

The cover 81 preferably is assembled on the container body 80 by pressing the former down in telescoping relation over the container body 80 until the upper end of the body wall enters the space between the flange 85 and the side wall 83. Thereafter, the lower end of the side wall portion 83 is pressed inwardly against the container body whereby to force the teeth 84 into the body wall and thus lock the cover 81 on the container body. It will be seen that the cover 81 cannot be removed without leaving visible evidence of such removal.

Referring to Fig. 6, there is shown still another form of cover construction, in which form the cover rim is clamped on the container body in somewhat different manner than previously described and in which the end piece cooperates with the rim in a somewhat different manner. A container body 100 is formed with a top rim or flange 102, which may be integrally formed with the body or separately formed and afterwards attached to the container body. The cover 103 includes a rim 104 preferably formed of metal or other suitable rigid material, and an end piece 112 preferably formed of paperboard or other suitable material.

The rim 104 is formed with a side wall portion 105 adapted to seat along the body flange 102 and having at its lower end an inturned flange or lip portion 106 adapted to engage under the end of the body flange 102. The rim 104 is rolled inwardly at its upper end to provide an arcuate portion 107 extending over the end of the container body 100, and has a portion 111 extending downwardly into the mouth of the container body and engaging the inner wall of the body. The portion 111 is formed with spaced beads 109 and 110 and a recessed portion 108 therebetween, which provides a seat 112 for the reception for the peripheral edge of the end piece 113. The

beads 109 and 110 bear against the inside face of the container body 100 and cooperates with the inturned flange 106 to lock the rim 104 to the container 100. If desired, the edge portion 111 also may be made to bear against the inside face of the container body and may bite into the container body to increase the locking effect.

The cover 103 is assembled on the container body 100 by telescoping rim 104 over the body 100 until the inturned lip 106 snaps around the lower end of the body flange 102. The end piece 113 may be readily removed from the rim 104 leaving the latter in position securely reinforcing and strengthening the container body 100 both against outward bulging and inward collapse and also preventing fraying or splitting of the container body adjacent the open end of the container.

It will now be seen that the present invention provides a container and cover assembly wherein the cover firmly grips the container and is prevented against removal except upon leaving visible evidence of such removal. The rim portion of the cover strengthens and reinforces the container body both when the end piece is in position and after removal thereof and no additional operations are necessary to produce this reinforcing other than those originally employed when applying the cover to the body. The rim of the cover is so formed that it automatically positions itself on the container body in gripping relation therewith and automatically locks itself in position upon application of the cover to the container in closed relation. The inwardly rolled lip provides a smooth top edge to the opened container preventing injury to the user and further gives a neat appearance to the container both when the end piece is in position closing the container and after the end piece has been removed to permit access to the interior of the container.

The rim may be made to grip the container in substantially liquid-tight relation so that when the container is used for commodities, such as ice cream, butter, or the like, which are subject to melting, there is no possibility of leakage at or adjacent the cover.

The container and cover are both capable of being readily and inexpensively formed and assembled and may be constructed of various suitable materials, depending upon the particular uses to which the container is to be put.

While certain novel features of the invention have been disclosed and are pointed out in the annexed claims, it will be understood that various omissions, substitutions and changes may be made by those skilled in the art without departing from the spirit of the invention.

What is claimed is:

1. In combination, a collapsible tubular body member and a cover adapted to telescope over one end of the body member, said cover including a relatively flat discoidal end piece adapted to close the end of the body member and a constraining rim having a recess formed therein for the reception of the peripheral edge of said end piece, said rim having a portion adapted to engage the outer surface of the body member to lock the rim on the body member, and a flange intermediate the ends of said rim and extending across the end of the container body, said flange having an edge portion engageable with the inside face of the body member to prevent inward collapse thereof relative to said rim.

2. In combination, a tubular container body and a pre-assembled cover telescoped over one end of the container body, said cover including a relatively rigid constraining rim having a portion adapted to engage the outer surface of the container body and a double-folded flange portion extending across the end of the container body, said double-folded flange portion having a free edge engaging the inside face of the container body whereby to prevent inward collapse of the body relative to said rim, and a relatively flat end piece removably associated with said rim, said rim having a circumferentially extending groove engaging the peripheral edge of said end piece.

3. A container including in combination, a tubular body member having an open end and a cover telescoped over the open end of said body member, said cover including a relatively stiff constraining rim having a portion exterior to said body member preventing outward bulging of the body member relative to the rim, and an inturned folded flange intermediate the ends of said rim and extending across the end of the container body, said flange having an end portion thereof directed outwardly to grip the inside face of said body member for preventing collapse of the body member relative to the rim, and a relatively flat end piece removably associated with said rim, said rim having a groove positioned above said flange for the reception of the peripheral edge of said end piece.

4. A cover for a container including, a relatively stiff constraining member having an inwardly extending bead at one end thereof, an inwardly extending preformed lip portion at the other end thereof and a folding flange intermediate the ends, said lip portion and said flange portion being adapted for retentive engagement with the inside and outside surfaces respectively of the container body, and a removable relatively flat closure disc within said rim member having its peripheral edge removably seated within and supported by said bead.

5. In a container, the combination of a tubular body wall and a cover therefor, said cover including a relatively stiff constraining rim and a relatively flat end disc removably associated with said rim, said rim comprising a strip of formable material having a generally U-shaped portion telescoped over one end of the body wall and formed with inturned edge portion engaging the inside and outside faces of said body, restraining said body against outward bulge and inward collapse, said rim having an integral portion upstanding from said U-shaped portion and defining an inwardly facing groove removably receiving the peripheral edge of said disc.

6. A container including in combination, a container body having an open end and a cover adapted to close the open end of the container body, said cover including a constraining rim telescoped over the open end of said body member, and a relatively flat paperboard end disc removably supported by said rim, said rim having a flange portion extending across the end of said container body and supporting said cover, said flange portion having an end portion directed outwardly to grip the inside face of said container body whereby to prevent inward collapse of said container body.

JAMES C. LA GRUA.