(12) INTERNATIONAL APPLICATION PUBLISHED UNDER THE PATENT COOPERATION TREATY (PCT)

(19) World Intellectual Property Organization
International Bureau

(43) International Publication Date
23 May 2019 (23.05.2019)

WIPO | PCT

(10) International Publication Number
WO 2019/099462 A1

(51) International Patent Classification:
A61B 17/122 (2006.01)

(21) International Application Number:
PCT/US2018/060946

(22) International Filing Date:
14 November 2018 (14.11.2018)

(25) Filing Language: English

(26) Publication Language: English

(30) Priority Data:
62/585,795 14 November 2017 (14.11.2017) US

(71) Applicant: **TELEFLEX MEDICAL INCORPORATED** [US/US]; 3015 Carrington Mill Boulevard, Morrisville, North Carolina 27560 (US).

(72) Inventor: **FOSHEE, David Lee**; 4601 Thane Court, Apex, North Carolina 27539 (US).

(74) Agent: **MASHACK, Mark F.** et al.; BAKER HOSTETLER LLP, 1050 Connecticut Avenue, NW, Suite 1100, Washington, District of Columbia 20036 (US).

(81) Designated States *(unless otherwise indicated, for every kind of national protection available)*: AE, AG, AL, AM, AO, AT, AU, AZ, BA, BB, BG, BH, BN, BR, BW, BY, BZ, CA, CH, CL, CN, CO, CR, CU, CZ, DE, DJ, DK, DM, DO, DZ, EC, EE, EG, ES, FI, GB, GD, GE, GH, GM, GT, HN, HR, HU, ID, IL, IN, IR, IS, JO, JP, KE, KG, KH, KN, KP, KR, KW, KZ, LA, LC, LK, LR, LS, LU, LY, MA, MD, ME, MG, MK, MN, MW, MX, MY, MZ, NA, NG, NI, NO, NZ, OM, PA, PE, PG, PH, PL, PT, QA, RO, RS, RU, RW, SA, SC, SD, SE, SG, SK, SL, SM, ST, SV, SY, TH, TJ, TM, TN, TR, TT, TZ, UA, UG, US, UZ, VC, VN, ZA, ZM, ZW.

(84) Designated States *(unless otherwise indicated, for every kind of regional protection available)*: ARIPO (BW, GH, GM, KE, LR, LS, MW, MZ, NA, RW, SD, SL, ST, SZ, TZ, UG, ZM, ZW), Eurasian (AM, AZ, BY, KG, KZ, RU, TJ, TM), European (AL, AT, BE, BG, CH, CY, CZ, DE, DK, EE, ES, FI, FR, GB, GR, HR, HU, IE, IS, IT, LT, LU, LV, MC, MK, MT, NL, NO, PL, PT, RO, RS, SE, SI, SK, SM, TR), OAPI (BF, BJ, CF, CG, CI, CM, GA, GN, GQ, GW, KM, ML, MR, NE, SN, TD, TG).

Published:
— *with international search report (Art. 21(3))*

(54) Title: SURGICAL CLIP

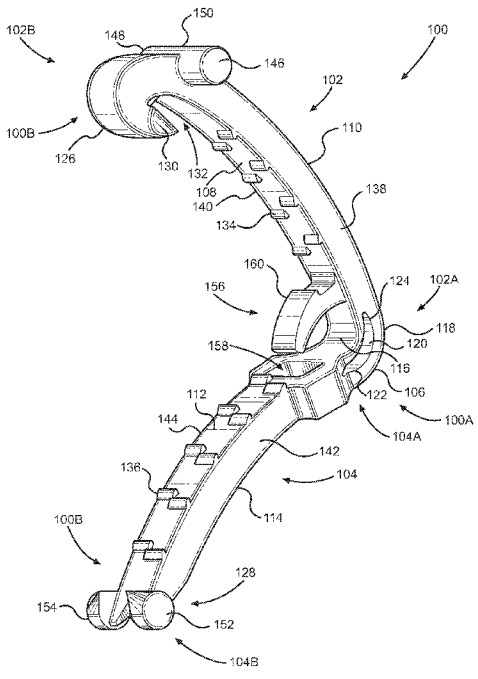

FIG. 1

(57) Abstract: A surgical clip may include first and second leg members, each having inner surfaces. The inner surface of the first leg member may be concave and the inner surface of the second leg member may be convex. The surgical clip may include a first locking member positioned on a distal end portion of the first leg member, and a second locking member positioned on a distal end portion of the second leg member. The surgical clip may also include a third locking member position between a proximal end portion and the distal end portion of the first leg member, and a fourth locking member positioned between a proximal end portion and the distal end portion of the second leg member. The first and second locking members, and the third and fourth locking members may be configured to interact to secure the surgical clip in a closed configuration.

WO 2019/099462 A1

SURGICAL CLIP

Priority

[0001] This application claims priority to U.S. Provisional Patent Application No. 62/585,795, filed on November 14, 2017 and titled "SURGICAL CLIP", the entire disclosure of which is incorporated herein.

Technical Field

[0002] The present invention relates generally to medical devices, and more particularly, to surgical clips for ligation of tissue.

Background

[0003] The ligation of tissue (e.g., blood vessels, lymph nodes, nerves, fallopian tubes, or cardiac tissue) is a common practice of many surgical procedures. For example, the temporary ligation of blood vessels (e.g., veins or arteries) is often required during the resection of the blood vessels to remove an aneurysm. On the other hand, the ligation of fallopian tubes is often desired to be more permanent. Ligation clips are relatively quick and easy to apply, so they have grown in popularity.

Overview

[0004] The present inventors recognize that there is a need to improve one or more features of the ligation clips. Current ligation clips often do not provide sufficient strength to ensure that the clip remains closed during its intended use. This is especially problematic with ligation clips formed of absorbable materials, which can be substantially weaker than non-absorbable materials. The weaker materials may potentially lead the implanted surgical clip to wear and/or break, causing the ligation clip to open. For example, uneven absorption and/or degradation of the material can cause the ligation clip to open prior to the desired tissue necrosis of vascular tissue. It would be desirable to provide a ligation clip having an improved locking mechanism to ensure that the clip remains closed during its intended use. The disclosed ligation clips are directed to mitigating or overcoming one or more of these problems.

[0005] A first aspect of the present invention is directed to a surgical clip configured to ligate tissue. The surgical clip may include a first leg member and a second leg member. The first leg member may include an inner surface with a concave curvature along its length,

and the second leg member may have an inner surface with a convex curvature along its length. The first and second leg members may be configured to move between an open configuration wherein the inner surfaces are spaced apart and a closed configuration wherein the inner surfaces are approximated. The surgical clip may have a first locking member positioned on a distal end portion of the first leg member, and a second locking member positioned on a distal end portion of the second leg member, the first and second locking members being configured to interact to secure the first and second leg members in the closed configuration. The surgical clip may also include a third locking member position between a proximal end portion and the distal end portion of the first leg member, and a fourth locking member positioned between a proximal end portion and the distal end portion of the second leg member, the third and fourth locking members being configured to interact to secure the first and second leg members in the closed configuration.

[0006] In some embodiments, the first locking member includes a hook and the second locking member includes a recess, where the hook is configured to deflect around the distal end portion of the second leg member and snap into the recess. In some embodiments, the third locking member includes an elongate member having a protrusion, and the fourth locking member includes a channel having an undercut, where the channel is configured to receive the elongate member and the undercut is configured to engage the protrusion. In some embodiments, the protrusion is spaced from the undercut in the closed configuration. In some embodiments, the third locking member be a single protrusion without a ratcheting mechanism. In some embodiments, the channel extends through a first segment of the second leg member, the first segment having a width greater than a width of a second segment of the second leg member. In some embodiments, the second segment of the second leg member is configured to engage tissue. In some embodiments, the third locking member is arcuate. In some embodiments, the third locking member includes an atraumatic end. In some embodiments, the third locking member is positioned on a proximal half of the inner surface of the first leg member. In some embodiments, a hinge portion connecting the proximal end portions of the first and second leg members, the hinge portion being configured to pivot the first leg member relative to the second leg member. In some embodiments, the third locking member forms a portion of a hinge portion connecting the proximal end portions of the first and second leg members. In some embodiments, the hinge portion includes a barrel positioned on the proximal end of the first leg member configured to rotate about a hinge pin

positioned on the proximal end portion of the second leg member, the barrel including the third locking member. In some embodiments, the third locking member includes a protrusion on the barrel, and the fourth locking member is an undercut in the proximal end portion of the second leg member. In some embodiments, the protrusion is spaced from the undercut in the closed configuration. In some embodiments, the barrel includes an opening between an end of the third locking member and a proximal end portion of the first leg member, and the hinge pin includes at least one flat surface, wherein the opening is substantially offset from the flat surface when the surgical clip is in the closed configuration. In some embodiments, the at least one flat surface is disposed at angle of about 135° from a longitudinal axis of the second leg member. In some embodiments, the surgical clip includes a boss positioned on the distal end portion of at least one of the first and second leg members. In some embodiments, the clip includes an absorbable polymer material. In some embodiments, the at least one of the inner surfaces of the first and second leg members includes a plurality of teeth angled toward a proximal end portion of the surgical clip. In some embodiments, both of the inner surfaces of the first and second leg members include a plurality of teeth angled toward the proximal end portion of the clip. In some embodiments, the plurality of teeth are positioned distal of the third locking member. In some embodiments, the third locking member includes first and second elongate members extending from opposing side surfaces of the first leg member, and the fourth locking member includes an outer surface of the second leg member. In some embodiments, the first and second elongate members includes a protrusion configured to engage the outer surface of the second leg member.

Brief Description of the Drawings

[0007] In order that the invention may be readily understood, aspects of this invention are illustrated by way of examples in the accompanying drawings.

[0008] FIG. 1 illustrates a perspective view of a first exemplary embodiment of a surgical clip of the present invention.

[0009] FIG. 2 illustrates a cross-sectional view of the first exemplary embodiment of the surgical clip of FIG. 1.

[0010] FIG. 3 illustrates a closed configuration of the first exemplary embodiment of the surgical clip of FIGS. 1 and 2.

[0011] FIG. 4 illustrates a cross-sectional view of the closed configuration of the first exemplary embodiment of the surgical clip of FIGS. 1-3.

[0012] FIG. 5 illustrates a perspective view of a second exemplary embodiment of a surgical clip of the present invention.

[0013] FIG. 6 illustrates an exploded view of the second exemplary embodiment of the surgical clip of FIG. 5.

[0014] FIG. 7 illustrates a closed configuration of the second exemplary embodiment of the surgical clip of FIGS. 5 and 6.

[0015] FIG. 8 illustrates a cross-sectional view of the closed configuration of the second exemplary embodiment of the surgical clip of FIGS. 5-7.

[0016] FIG. 9 illustrates a perspective view of a third exemplary embodiment of a surgical clip of the present invention.

[0017] FIG. 10 illustrates a frontal view of the third exemplary embodiment of the surgical clip of FIG. 9.

[0018] FIG. 11 illustrates a closed configuration of the third exemplary embodiment of the surgical clip of FIGS. 9 and 10.

[0019] The same reference numbers are used in the drawings and the following detailed description to refer to the same or similar parts.

Detailed Description

[0020] The present invention is generally directed to a surgical clip configured to ligate tissue (e.g., a blood vessel). The surgical clip may include first and second leg members configured to pivot between an open configuration and a closed configuration. The surgical clip may also have first and second locking mechanisms along the length of surgical clip to provide strength and ensure that the clip remains in the closed configuration. For example, the surgical clip may include a first latching or locking mechanism on a distal end portion of the surgical clip, and a second latching or locking mechanism between the distal end portion and a proximal end portion. Each of the first and second locking mechanisms may include latching, interlocking, and/or interfering members that collectively secure the surgical clip in the closed configuration. For example, the first locking mechanism may include a hook on the first leg member configured to deflect around a tip member on the second leg member. The second locking mechanism may include one or more arcuate elongate member on the first leg member configured to engage the second leg member. In some embodiments, the arcuate elongate member may pass through a channel in the second leg member and produce an interference fit with an undercut of the channel when in the closed configuration. In some

embodiments, the second locking mechanism may include a portion of a barrel of a hinge portion of the first leg member, and the barrel may be configured to releasably receive a pivot pin of the second leg member. In some embodiments, the second locking member may include first and second arcuate elongate members extending from side surfaces of the first leg member and configured to engage an outer surface of the second leg member. The second locking mechanism may include interfering members (*e.g.*, the elongate member(s) and/or a surface of the second leg member) spaced apart from each other in the closed configuration to allow for flexibility along the length of the surgical clip and/or to accommodate for different thicknesses of tissue, while reinforcing the first locking mechanism. The surgical clip may be particularly useful as a hemostatic clip configured to be latched around a vessel to thereby reduce and/or stop the flow of fluid through the vessel. However, it is also contemplated that the embodiments of the surgical clip may have non-surgical applications, such as to clasp hair.

[0021] The invention will now be described with reference to the figures, in which like reference numerals refer to like parts throughout. In accordance with conventional practice, as used herein, and unless otherwise indicated herein, the term "proximal end portion" refers to the specified end portion of the surgical clip and/or related component which is generally closer to the medical personnel handling or manipulating the device as it is intended to be used, and the term "distal end portion" shall refer to the specified end portion of the surgical clip and/or related component which is opposite the proximal end portion. As used herein, the term "longitudinal" is directed to the dimension which extends along the length of the surgical clip and/or related components, as would be commonly understood by one of skill in the art. Furthermore, as used herein, the term "transverse" is directed to any axis or direction which is orthogonal to the longitudinal length of the surgical clip and/or related components.

[0022] FIGS. 1-4 illustrate a first exemplary embodiment of a surgical clip 100 of the present invention. The surgical clip 100 may have a proximal end portion 100A and a distal end portion 100B. The surgical clip 100 may further include a first leg member 102 having a proximal end portion 102A and a distal end portion 102B, and a second leg member 104 having a proximal end portion 104A and a distal end portion 104B. The proximal end portions 102A, 104A may be connected by a hinge portion 106.

[0023] The first and second leg members 102, 104 may include surfaces having curved portions. For example, the first leg member 102 may include a first inner surface 108 and a

first outer surface 110, and the second leg member 104 may include a second inner surface 112 and a second outer surface 114. As shown in FIG. 1, the first inner surface 108 may have a concave configuration, and the first outer surface 110 may have a convex configuration, or vice versa. The second inner surface 112 may have a convex configuration, and the second outer surface 114 may have a concave configuration, or vice versa. The first and second inner surfaces 108, 112 may be approximated in a closed configuration, and may be resiliently flexible along its length to distribute pressure over a width of the tissue as the tissue is ligated. The first and second inner surfaces 108, 112 may each have a continuous curvature between proximal and distal end portions to provide a favorable compression of tissue.

[0024] The hinge portion 106 may have a concave inner surface 116 and a convex outer surface 118. The concave inner surface 116 of hinge portion 106 may continuously join the first inner surface 108 of the first leg member 102 and the second inner surface 112 of the second leg member 104. The convex outer surface 118 of the hinge portion 106 may join the first outer surface 110 of the first leg member 102 and the second outer surface 114 of the second leg member 104. The hinge portion 106 may also include a curved slot 120 located between the curved hinge surfaces 116, 118, and the curved slot 120 may be positioned closer to the concave inner surface 116 than to the convex outer surface 118. The curved slot 120 may extend completely through the hinge portion 106 from side to side and its opposite ends 122, 124 may extend into the proximal end portions 102A, 104A of the first and second leg members 102, 104, respectively. The curved slot 120 may provide added flexibility and resiliency to the hinge portion 106, but the concave inner surface 116 may prevent any portion of a clamped vessel from being trapped within the curved slot 120. In some embodiments, the hinge portion 106 may be resilient and integral to the proximal end portions 102A, 104A of the first and second leg members 102, 104. For example, the hinge portion 106 may bias the surgical clip 100 into an open configuration (*e.g.*, FIG. 1).

[0025] The surgical clip 100 may also include one or more latching or locking mechanisms. For example, the first leg member 102 may transition to a hook section 126 at its distal end portion 102B, and the second leg member 104 may transition to a pointed tip portion 128 at its distal end 104B. A distal end portion of the hook section 126 may curve inwardly and point generally toward the concave inner surface 116 of the hinge portion 106. The hook section 126 may have one or more transverse beveled surfaces 130 and a concave inner

surface which merges with the first inner surface 108 to define a recess 132. The tip portion 128 may be V-shaped defining a slot configured to receive the beveled surfaces 130, as the hook section 126 deflects around the tip portion 128. The hook section 126 and the tip portion 128 may engage to form a first latching or locking mechanism. For example, the recess 132 may engage with the tip portion 128 in the course of compressing the surgical clip 100 into the closed configuration (*e.g.*, FIGS. 3-4) that may be secured position around a vessel or other tissue.

[0026] The surgical clip 100 may also include a second latching or locking mechanism. For example, as depicted in FIGS. 1-4, an elongate member 156 may extend from the first inner surface 108 of the first leg member 102, between the proximal end portion 102A and the distal end portion 102B. The elongate member 156 may be positioned anywhere on the length of the first leg member 102. In some embodiments, the elongate member 156 may be positioned closer to the proximal end portion 102A than the distal end portion 102B (e.g., on the proximal half of the first leg member 102) in order to secure the proximal end portion 100A of the surgical clip 100. In some embodiments, the elongate member 156 may be positioned closer to the proximal end portion 102A than a centerline of the first leg member 102 (e.g., on the proximal quarter of the first leg member 102) in order to distribute the latching force along the length of the surgical clip 100. The elongate member 156 may extend in an arcuate configuration from the first leg member 102 approximating the arcuate path of the second leg member 104 relative to the first leg member 102. When the surgical clip 100 is in the closed configuration (*e.g.*, FIGS. 3-4), the elongate member 156 may be received in an aperture or channel 158 through at least a portion of the thickness of the second leg member 104. As depicted in FIG. 1, the channel 158 may have a width substantially equal to or greater than a width of the remaining portion of the second leg member 104, such that the width of the portion of second leg member 104 through which the channel 158 extends may be greater than the width of the remaining portion of the second leg member 104 configured to engage tissue. Although FIGS. 1-4 illustrate the elongate member 156 on the first leg member 102 and the channel 158 on the second leg member 104, the surgical clip 100 may, additionally or alternatively, include an elongated member 156 on the second leg member 104 and a channel 158 on the first leg member 102. It is further contemplated that the surgical clip 100 may include a plurality of elongated members 156 on

the first leg member 102 and/or second leg member 104 and a plurality of corresponding channels 158 on the opposite leg member 102, 104.

[0027] As further depicted in the cross-sectional views of FIGS. 2 and 4, the elongate member 156 may include a tooth or protrusion 160 configured to engage an undercut 162 of the channel 158 to provide the second latching or locking mechanism. The protrusion 160 may be spaced from the undercut 162 when the surgical clip 100 is in the closed configuration and in the absence of tissue (*e.g.*, FIGS. 3-4). For example, the first locking mechanism may be engaged in the closed configuration, while the second locking mechanism may not be engaged. The spacing between the protrusion 160 and undercut 162 in the closed configuration may allow flexibility of the surgical clip 100 along its length to accommodate different thicknesses of tissue and to distribute pressure over a width of the tissue as it is ligated. The second locking mechanism may also reinforce the first locking mechanism. For example, the second locking mechanism may prevent the surgical clip 100 from opening when the surgical clip 100 (e.g., the first locking mechanism) wears and/or breaks, such as when uneven absorption and/or degradation of the surgical clip 100 causes the first locking mechanism to disengage. In that sense, the elongate member 156 may include only a single protrusion 160, without any type of ratcheting or tightening mechanism.

[0028] It is contemplated that the channel 158 may extend through the entire thickness of the second leg member 104. The elongate member 156 may have a length greater than a length of the channel 158, in order to provide an exposed distal end portion 159 of the elongate member 156. The exposed distal end portion 159 of the elongate member 156 may be engaged and deflected proximally to release the second locking mechanism. The elongate member 156 may also be atraumatic with an atraumatic end and provide a stop to prevent the tissue from being pinched by the hinge portion 106.

[0029] As further shown in the embodiment of FIGS. 1 and 3, the surgical clip 100 may include a first plurality of teeth 134 protruding on the first inner surface 108, and a second plurality of teeth 136 protruding on the second inner surface 112. The teeth 134, 136 may maximize security of compressed tissue and minimize migration. The teeth 134, 136 may be angled toward the proximal end portion 102A of the surgical clip 100 in order to secure the tissue toward the hinge portion 106. As depicted in FIG. 1, the first and second plurality of teeth 134, 136 may include two or more staggered rows of teeth collectively extending the width of the inner surfaces 108, 112. As further depicted in FIGS. 3-4, the first plurality of

teeth 134 may not engage the second plurality of teeth 136 in the closed configuration to increase the discrete contact points along the length of the surgical clip 100 and enhance security. In some embodiments, one or more of the teeth 134, 136 may be omitted.

[0030] The leg members 102, 104 may include one or more bosses along their length to engage a clip applier. For example, the first leg member 102 may include cylindrical bosses 146, 148 (*e.g.*, as depicted in FIGS. 1 and 3) protruding perpendicular to each of the opposed side surfaces 138, 140 adjacent to distal end portion 102B of first leg member 102 and immediately inward of hook section 126. In the illustrated example of the surgical clip 100, the bosses 146, 148 may be cylindrical and project outwardly beyond the first outer surface 110 of first leg member 102. The bosses 146, 148 may also be coupled together by a bridge section 150. The second leg member 104 may also include bosses 152, 154 at the distal end portion 104B. The bosses 152, 154 may be cylindrical and protrude perpendicular to each of opposed side surfaces 142, 144 of second leg member 104, extending longitudinally forward beyond the point of tip portion 128. In the practice of ligating tissue, the surgical clip 100 may be designed to be compressed into a latched or locked configuration around the vessel through the use of an appropriate clip applier, such as described in U.S. Pat. No. 5,100,416, the entire disclosure of which is incorporated herein by reference.

[0031] FIGS. 5-8 illustrate a second exemplary embodiment of a surgical clip 200 of the present invention. The surgical clip 200 may have a proximal end portion 200A and a distal end portion 200B. The surgical clip 200 may further include a first leg member 202 having a proximal end portion 202A and a distal end portion 202B, and a second leg member 204 having a proximal end portion 204A and a distal end portion 204B. The proximal end portions 202A, 204A of the first and second leg members 202, 204 may be releasably connected at a hinge portion 206. The surgical clip 200 may have elements and/or aspects similar to the surgical clip 100, and may be similarly represented in FIGS. 5-8. For the sake of brevity, the elements and/or aspects similar to those of the surgical clip 100 may not be discussed with reference to the surgical clip 200.

[0032] The first and second leg members 202, 204 may include surfaces having curved portions. For example, the first leg member 202 may include a first inner surface 208 and a first outer surface 210, and the second leg member 204 may include a second inner surface 212 and a second outer surface 214. The first inner surface 208 may have a concave configuration, and the first outer surface 210 may have a convex configuration, or vice versa.

The second inner surface 212 may have a convex configuration, and the second outer surface 214 may have a concave configuration, or vice versa. The first and second inner surfaces 208, 212 may be approximated in a closed configuration, and may be resiliently flexible along its length to distribute pressure over a width of the tissue as the tissue is ligated. The first and second inner surfaces 208, 212 may each have a continuous curvature between proximal and distal end portions to provide a favorable compression of tissue.

[0033] The surgical clip 200 may also include one or more latching or locking mechanisms. For example, the first leg member 202 may transition to a hook section 226 at its distal end portion 202B, and the second leg member 204 may transition to a pointed tip portion 228 at its distal end 204B. A distal end portion of the hook section 226 may curve inwardly and point generally toward the concave inner surface 216 of the hinge portion 206. The hook section 226 may have one or more transverse beveled surfaces 230 and a concave inner surface which merges with the first inner surface 208 to define a recess 232. The tip portion 228 may be V-shaped defining a slot configured to receive the beveled surfaces 230, as the hook section 226 deflects around the tip portion 228. The hook section 226 and the tip portion 228 may engage to form a first latching or locking mechanism. For example, the recess 232 may engage with the tip portion 228 in the course of compressing the surgical clip 200 into the closed configuration (*e.g.*, FIGS. 7-8) that may be secured position around a vessel or other tissue.

[0034] The first and second leg members 202, 204 of the surgical clip 200 may be separable. For example, the proximal end portions 202A, 204A of the first and second leg members 202, 204 may be separable at the hinge portion 206. As depicted in FIGS. 5-8, the proximal end portion 202A of the first leg member 202 may include a barrel 264 formed from a proximal elongate member 266 and a distal elongate member 268. The proximal elongate member 266 may form at least a portion of the proximal end portion 202A of the first leg member 202. One or more of the elongate members 266, 268 of the barrel 264 may be arcuate in opposite direction and spaced to form a slot 270 with an opening 272. In some embodiments, the slot 270 may have a recessed concave portion with a substantially circular cross-section. As further depicted in FIGS. 5-8, the slot 270 and the opening 272 may extend the entire width of the first leg member 202, and may be sized to receive a hinge pin 274 on the proximal end portion 204A of the second leg member 204. The hinge pin 274 may include side surfaces 276 on opposite sides of the hinge pin 274. The side surfaces 276 may

be substantially flat and allow the surgical clip 200 to be selectively assembled or disassembled when the hinge pin 274 is passed through the opening 272 at a predetermined angle. In other words, the hinge pin 274 may not fit into the opening 272 at any angle other than the predetermined angle. In the example as depicted in FIG. 5, the side surfaces 276 may be disposed at an angle between about 90° and 135° relative to a longitudinal axis of the second leg member 204, such that assembly or disassembly of the surgical clip 200 may be performed when the opening 272 of the second leg member 204 is disposed at the angle relative to the hinge pin 274 of the second leg member 204. Advantageously, the selective assembly/disassembly of the surgical clip 200 may prevent disassembly during the ordinary course of use of the surgical clip 200. For example, the side surfaces 276 may be substantially offset of the opening 272 (*e.g.*, by at least about 90°) when the surgical clip 200 in the closed configuration to prevent the surgical clip 200 from disassembling. It is also contemplated that the surgical clip 200 may be assembled *in situ*, for example, immediately prior to compression of the surgical clip 200 onto tissue.

[0035] As further depicted in FIGS. 5-8, the surgical clip 200 may be assembled by the barrel 264 of the first leg member 202 being received in a channel 278 of the second leg member 204. The channel 278 may be defined by the hinge pin 274, a proximal surface 280 of the second leg member 204, and first and second leg extension members 282 extending between main body of the second leg member 204 and the hinge pin 274. The channel 278 may allow passage of the distal elongate member 268 to transition the surgical clip 200 from the open configuration (*e.g.*, FIG. 5) to the closed configuration (*e.g.*, FIGS. 7-8).

[0036] The interaction of the distal elongate member 268 and the channel 278 may provide a second latching or locking mechanism to secure the surgical clip 200 in the closed configuration. For example, the distal elongate member 268 may include a tooth or protrusion 284 that engages an undercut 286 on the proximal surface 280 of the second leg member 204. One or more of the protrusion 284 and the undercut 286 may deflect as the protrusion 284 passes through the channel 278, and the protrusion 284 and the undercut 286 may then provide a latching, interlocking, and/or interference fit to prevent the surgical clip 200 from pivoting to the open configuration (*e.g.*, FIGS. 5-6) from the closed configuration (*e.g.*, FIGS. 7-8). The protrusion 284 may be spaced from the undercut 286 when the surgical clip 200 is in the closed configuration and in the absence of tissue. For example, the first locking mechanism may be engaged in the closed configuration, while the second

locking mechanism may not be engaged. The spacing between the protrusion 284 and undercut 286 in the closed configuration may allow flexibility of the surgical clip 200 along its length to accommodate different thicknesses of tissue and to distribute pressure over a width of the tissue as it is ligated. The second locking mechanism may also reinforce the first locking mechanism. For example, the second locking mechanism may prevent the surgical clip 200 from opening when the surgical clip 200 (*e.g.*, the first locking mechanism) wears and/or breaks, such as when uneven absorption and/or degradation of the surgical clip 200 causes the first locking mechanism to disengage. In that sense, the elongated member 268 may include only a single protrusion 284, without any type of ratcheting or tightening mechanism.

[0037] The surgical clip 200 may include a first plurality of teeth 234 protruding on the first inner surface 208, and a second plurality of teeth 236 protruding on the second inner surface 212. The teeth 234, 236 may maximize security of compressed tissue and minimize migration. The teeth 234, 236 may be angled toward the proximal end portion 202A of the surgical clip 200 in order to secure the tissue toward the hinge portion 206. The first and second plurality of teeth 234, 236 may include two or more staggered rows of teeth collectively extending the width of the inner surfaces 208, 212. The first plurality of teeth 234 may not engage the second plurality of teeth 236 in the closed configuration to increase the discrete contact points along the length of the surgical clip 200 and enhance security. In some embodiments, one or more of the teeth 234, 236 may be omitted.

[0038] The leg members 202, 204 may include one or more bosses along their length to engage a clip applier. For example, the first leg member 202 may include cylindrical bosses 246, 248 protruding perpendicular to each of the opposed side surfaces 238, 240 adjacent to distal end portion 202B of first leg member 202 and immediately inward of hook section 226. In the illustrated example of the surgical clip 200, the bosses 246, 248 may be cylindrical and project outwardly beyond the first outer surface 210 of first leg member 202. The bosses 246, 248 may also be coupled together by a bridge section 250. The second leg member 104 may also include bosses 252, 254 at the distal end portion 204B. The bosses 252, 254 may be cylindrical and protrude perpendicular to each of opposed side surfaces 242, 244 of second leg member 204, extending longitudinally forward beyond the point of tip portion 228. In the practice of ligating tissue, the surgical clip 200 may be designed to be compressed into a latched or locked configuration around the vessel through the use of an appropriate clip

applier, such as described in U.S. Pat. No. 5,100,416, the entire disclosure of which is incorporated herein by reference.

[0039] FIGS. 9-11 illustrate a third exemplary embodiment of a surgical clip 300 of the present invention. The surgical clip 300 may have a proximal end portion 300A and a distal end portion 300B. The surgical clip 300 may further include a first leg member 302 having a proximal end portion 302A and a distal end portion 302B, and a second leg member 304 having a proximal end portion 304A and a distal end portion 304B. The proximal end portions 302A, 304A of the first and second leg members 302, 304 may be connected by a hinge portion 306. The surgical clip 300 may have elements similar to at least one of the surgical clips 100, 200, and may be similarly represented in FIGS. 9-11. For the sake of brevity, the elements and/or aspects of the elements similar to those of the surgical clip 100, 200 may not be discussed with reference to the surgical clip 300.

[0040] The first and second leg members 302, 304 may include surfaces having curved portions. For example, the first leg member 302 may include a first inner surface 208 and a first outer surface 310, and the second leg member 304 may include a second inner surface 312 and a second outer surface 314. The first inner surface 308 may have a concave configuration, and the first outer surface 310 may have a convex configuration, or vice versa. The second inner surface 312 may have a convex configuration, and the second outer surface 314 may have a concave configuration, or vice versa. The first and second inner surfaces 308, 312 may be approximated in a closed configuration, and may be resiliently flexible along its length to distribute pressure over a width of the tissue as the tissue is ligated. The first and second inner surfaces 308, 312 may each have a continuous curvature between proximal and distal end portions to provide a favorable compression of tissue.

[0041] The hinge portion 306 may have a concave inner surface 316 and a convex outer surface 318. The concave inner surface 316 of hinge portion 306 may continuously join the first inner surface 308 of the first leg member 302 and the second inner surface 312 of the second leg member 304. The convex outer surface 318 of the hinge portion 306 may join the first outer surface 310 of the first leg member 302 and the second outer surface 314 of the second leg member 304. The hinge portion 306 may also include a curved slot 320 located between the curved hinge surfaces 316, 318, and the curved slot 320 may be positioned closer to the concave inner surface 316 than to the convex outer surface 318. The curved slot 320 may extend completely through the hinge portion 306 from side to side and its opposite ends

322, 324 may extend into the proximal end portions 302A, 304A of the first and second leg members 302, 304, respectively. The curved slot 320 may provide added flexibility and resiliency to the hinge portion 306, but the concave inner surface 316 may prevent any portion of a clamped vessel from being trapped within the curved slot 320. In some embodiments, the hinge portion 306 may be resilient and integral to the proximal end portions 302A, 304A of the first and second leg members 302, 304. For example, the hinge portion 306 may bias the surgical clip 300 into an open configuration.

[0042] The surgical clip 300 may include one or more latching or locking mechanisms. For example, the first leg member 302 may transition to a hook section 326 at its distal end portion 302B, and the second leg member 304 may transition to a pointed tip portion 328 at its distal end 304B. A distal end portion of the hook section 326 may curve inwardly and point generally toward the concave inner surface 316 of the hinge portion 306. The hook section 326 may have one or more transverse beveled surfaces 330 and a concave inner surface which merges with the first inner surface 308 to define a recess 332. The tip portion 328 may be V-shaped defining a slot configured to receive the beveled surfaces 330, as the hook section 326 deflects around the tip portion 328. The hook section 326 and the tip portion 328 may engage to form a first latching or locking mechanism. For example, the recess 332 may engage with the tip portion 328 in the course of compressing the surgical clip 300 into the closed configuration (*e.g.*, FIG. 11) that may be secured position around a vessel or other tissue.

[0043] The surgical clip 300 may also include a second latching or locking mechanism. For example, as depicted in FIGS. 8-11, one or more elongate members 390 may extend from the first leg member 302, from a length between the proximal end portion 302A and the distal end portion 302B. For example, the one or more elongated members 390 may include first and second elongated members 390 extending from opposing sides 338, 340 of the first leg member 302, in an external or "out-board" configuration, and configured to receive the second leg member 304 therebetween. The elongate member(s) 390 may be positioned anywhere on the length of the first leg member 302. In some embodiments, the elongate member(s) 390 may be positioned closer to the proximal end portion 302A than the distal end portion 302B (e.g., on the proximal half of the first leg member 302) in order to secure the proximal end portion 300A of the surgical clip 300. In some embodiments, the elongate member(s) 390 may be positioned closer to the proximal end portion 302A than a centerline

of the first leg member 302 (*e.g.*, on the proximal quarter of the first leg member 302) in order to distribute the latching force along the length of the surgical clip 300. The elongate member(s) 390 may extend in an arcuate configuration from the first leg member 302 approximating the arcuate path of the second leg member 304 relative to the first leg member 302. Although FIGS. 8-11 illustrate the elongate member(s) 390 on the first leg member 302, the surgical clip 300 may, additionally or alternatively, include one or more elongated members 390 on the second leg member 304.

[0044] As further depicted in FIGS. 8-11, the elongate member(s) 390 may include a tooth or protrusion 392 configured to engage an outer surface 314 of the second leg member 304 to provide the second latching or locking mechanism. The protrusion 392 may be spaced from the outer surface 314 when the surgical clip 300 is in the closed configuration and in the absence of tissue (*e.g.*, FIG. 11). For example, the first locking mechanism may be engaged in the closed configuration, while the second locking mechanism may not be engaged. The spacing between the protrusion 392 and outer surface 314 in the closed configuration may allow flexibility of the surgical clip 300 along its length to accommodate different thicknesses of tissue and to distribute pressure over a width of the tissue as it is ligated. The second locking mechanism may also reinforce the first locking mechanism. For example, the second locking mechanism may prevent the surgical clip 300 from opening when the surgical clip 300 (*e.g.*, the first locking mechanism) wears and/or breaks, such as when uneven absorption and/or degradation of the surgical clip 300 causes the first locking mechanism to disengage. In that sense, each of the elongate member(s) 390 may include only a single protrusion 392, without any type of ratcheting or tightening mechanism.

[0045] The surgical clip 300 may include a first plurality of teeth 334 protruding on the first inner surface 308, and a second plurality of teeth 336 protruding on the second inner surface 312. The teeth 334, 336 may maximize security of compressed tissue and minimize migration. The teeth 334, 336 may be angled toward the proximal end portion 302A of the surgical clip 300 in order to secure the tissue toward the hinge portion 306. The first and second plurality of teeth 334, 336 may include two or more staggered rows of teeth collectively extending the width of the inner surfaces 308, 312. The first plurality of teeth 334 may not engage the second plurality of teeth 336 in the closed configuration to increase the discrete contact points along the length of the surgical clip 300 and enhance security. In some embodiments, one or more of the teeth 334, 336 may be omitted.

[0046] The leg members 302, 304 may include one or more bosses along their length to engage a clip applier. For example, the first leg member 302 may include cylindrical bosses 346, 348 protruding perpendicular to each of the opposed side surfaces 338, 340 adjacent to distal end portion 302B of first leg member 302 and immediately inward of hook section 326. In the illustrated example of the surgical clip 300, the bosses 346, 348 may be cylindrical and project outwardly beyond the first outer surface 310 of first leg member 302. The bosses 346, 348 may also be coupled together by a bridge section 350. The second leg member 304 may also include bosses 352, 354 at the distal end portion 304B. The bosses 352, 354 may be cylindrical and protrude perpendicular to each of opposed side surfaces 342, 344 of second leg member 304, extending longitudinally forward beyond the point of tip portion 328. In the practice of ligating tissue, the surgical clip 300 may be designed to be compressed into a latched or locked configuration around the vessel through the use of an appropriate clip applier, such as described in U.S. Pat. No. 5,100,416, the entire disclosure of which is incorporated herein by reference.

[0047] The surgical clips 100, 200, 300 may be made of any suitable size and may be applied to any number of tissues, such as blood vessels, lymph nodes, nerves, fallopian tubes, or cardiac tissue. The surgical clip 100, 200, 300 may be constructed from any suitable biocompatible material, such as certain metals and polymers. The surgical clip 100, 200, 300 may include absorbable and/or non-absorbable polymeric materials. Exemplary polymeric materials include homopolymers or co-polymers of one or more of polyacetal, polyethylene terephthalate (PET), polybutylene terephthalate (PBT), polyoxymethylene (POM), polymethyl methacrylate (PMMA), polylactic acid (PLA), polyglycolic acid (PGA), and other thermoplastic materials having similar properties that can be injection-molded, extruded or otherwise processed into like articles. However, the surgical clips 100, 200, 300 of the present invention are especially suitable for absorbable material that are weaker and degrade, sometimes at an uneven rate. The surgical clip 100, 300 may be a one-piece integral polymeric body to facilitate manufacturing. It is also contemplated that each of the leg members 202, 204 of the surgical clip 200 may be a one-piece integral polymeric body to facilitate manufacturing.

[0048] The many features and advantages of the invention are apparent from the detailed specification, and thus, it is intended by the appended claims to cover all such features and advantages of the invention which fall within the true spirit and scope of the invention.

Further, since numerous modifications and variations will readily occur to those skilled in the art, it is not desired to limit the invention to the exact construction and operation illustrated and described, and accordingly, all suitable modifications and equivalents may be resorted to, falling within the scope of the invention.

Claims

What is claimed is:

1. A surgical clip comprising:

a first leg member and a second leg member, the first leg member having an inner surface with a concave curvature along its length, and the second leg member having an inner surface with a convex curvature along its length, wherein the first and second leg members are configured to move between an open configuration wherein the inner surfaces are spaced apart and a closed configuration wherein the inner surfaces are approximated;

a first locking member positioned on a distal end portion of the first leg member, and a second locking member positioned on a distal end portion of the second leg member, the first and second locking members being configured to interact to secure the first and second leg members in the closed configuration; and

a third locking member positioned between a proximal end portion and the distal end portion of the first leg member, and a fourth locking member positioned between a proximal end portion and the distal end portion of the second leg member, the third and fourth locking members being configured to interact to secure the first and second leg members in the closed configuration.

2. The surgical clip of claim 1, wherein the first locking member comprises a hook and the second locking member comprises a recess, wherein the hook is configured to deflect around the distal end portion of the second leg member and snap into the recess.

3. The surgical clip of at least one of claims 1 and 2, wherein the third locking member comprises an elongate member having a protrusion, and the fourth locking member comprises a channel having an undercut, wherein the channel is configured to receive the elongate member and the undercut is configured to engage the protrusion.

4. The surgical clip of claim 3, wherein the protrusion is spaced from the undercut in the closed configuration.

5. The surgical clip of at least one of claims 3 and 4, wherein the third locking member comprises a single protrusion without a ratcheting mechanism.

6. The surgical clip of at least one of claims 3-5, wherein the channel extends through a first segment of the second leg member, the first segment having a width greater than a width of a second segment of the second leg member.

7. The surgical clip of claim 6, wherein the second segment of the second leg member is configured to engage tissue.

8. The surgical clip of at least one of claims 1-7, wherein the third locking member is arcuate.

9. The surgical clip of at least one of claims 1-8, wherein the third locking member comprises an atraumatic end.

10. The surgical clip of at least one of claims 1-9, wherein the third locking member is positioned on a proximal half of the inner surface of the first leg member.

11. The surgical clip of at least one of claims 1-10, further comprising a hinge portion connecting the proximal end portions of the first and second leg members, the hinge portion being configured to pivot the first leg member relative to the second leg member.

12. The surgical clip of at least one of claims 1-11, wherein the third locking member forms a portion of a hinge portion connecting the proximal end portions of the first and second leg members.

13. The surgical clip of claim 12, wherein the hinge portion comprises a barrel positioned on the proximal end of the first leg member configured to rotate about a hinge pin positioned on the proximal end portion of the second leg member, the barrel comprising the third locking member.

14. The surgical clip of claim 13, wherein the third locking member comprises a protrusion on the barrel, and the fourth locking member is an undercut in the proximal end portion of the second leg member.

15. The surgical clip of claim 14, wherein the protrusion is spaced from the undercut in the closed configuration.

16. The surgical clip of at least one of claims 13-15, wherein the barrel comprises an opening between an end of the third locking member and a proximal end portion of the first leg member, and the hinge pin comprises at least one flat surface, wherein the opening is substantially offset from the flat surface when the surgical clip is in the closed configuration.

17. The surgical clip of claim 16, wherein the at least one flat surface is disposed at angle of about 135° from a longitudinal axis of the second leg member.

18. The surgical clip of at least one of claims 1-17, further comprising a boss positioned on the distal end portion of at least one of the first and second leg members.

19. The surgical clip of at least one of claims 1-18, wherein the clip comprises an absorbable polymer material.

20. The surgical clip of at least one of claims 1-19, wherein at least one of the inner surfaces of the first and second leg members comprises a plurality of teeth angled toward a proximal end portion of the surgical clip.

21. The surgical clip of claim 20, wherein both of the inner surfaces of the first and second leg members comprise a plurality of teeth angled toward the proximal end portion of the clip.

22. The surgical clip of at least one of claims 20 and 21, wherein the plurality of teeth are positioned distal of the third locking member in the closed configuration.

23. The surgical clip of at least one of claims 1-22, wherein the third locking member includes first and second elongate members extending from opposing side surfaces of the first leg member, and the fourth locking member includes an outer surface of the second leg member.

24. The surgical clip of claim 23, wherein the first and second elongate members comprise a protrusion configured to engage the outer surface of the second leg member.

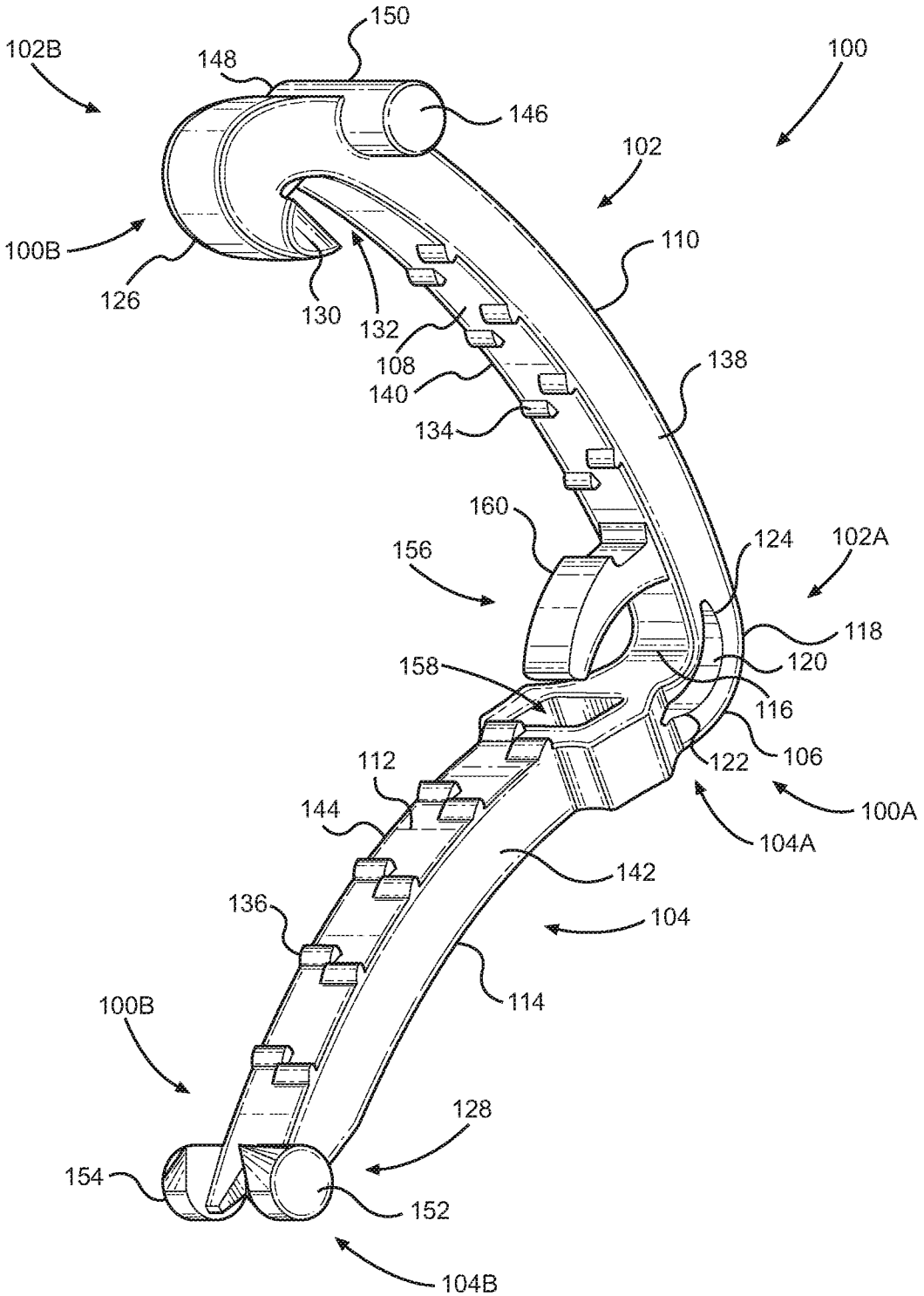
150
102B
148
100
146
102
100B
110
126
130
132
108
140
138
134
160
156
124
102A
118
158
120
116
106
112
122
100A
144
104A
142
136
104
114
100B
128
154
152
104B

FIG. 1

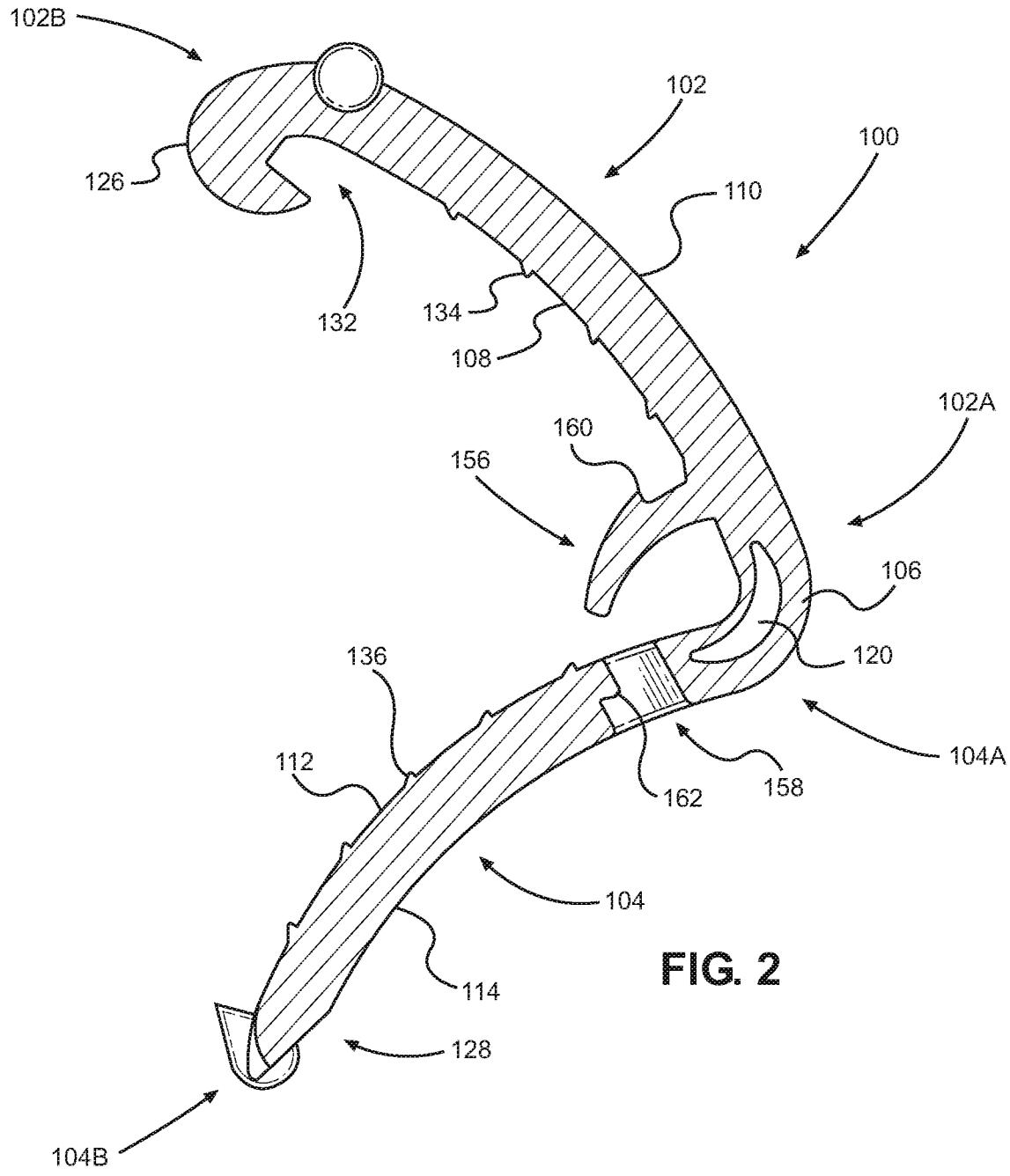
102B
102
100
126
110
132
134
108
102A
160
156
106
120
136
112
162
158
104A
104
114
128
104B

FIG. 2

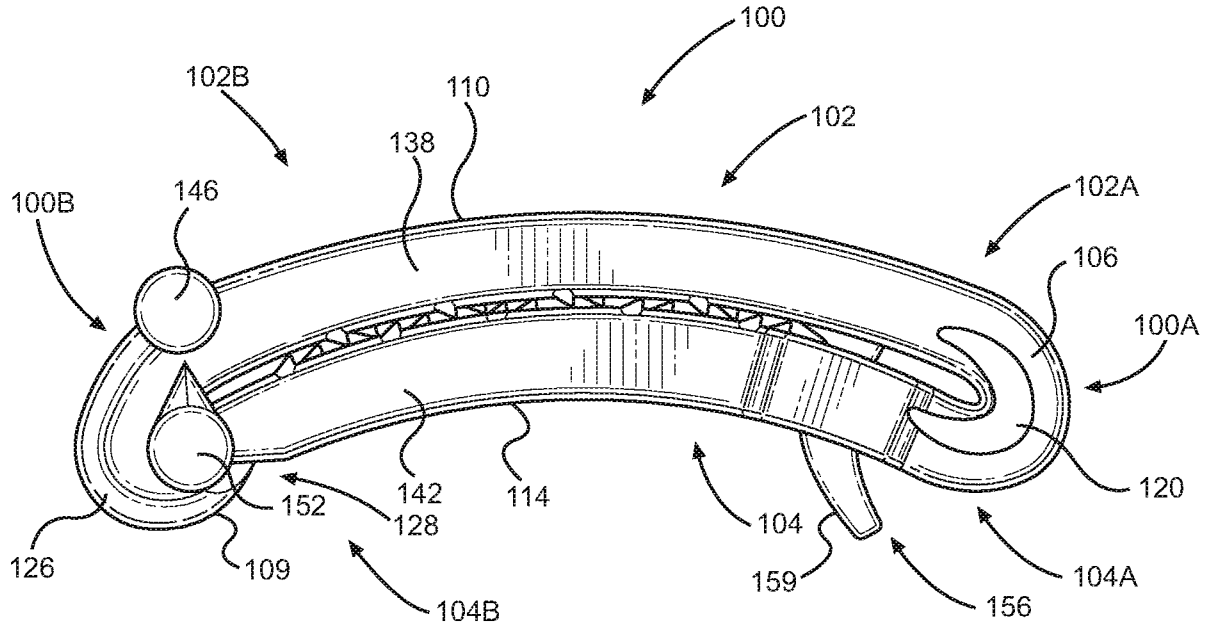
100
102B
110
102
138
146
100B
102A
106
100A
120
142
114
152
128
104
126
109
159
104A
104B
156

FIG. 3

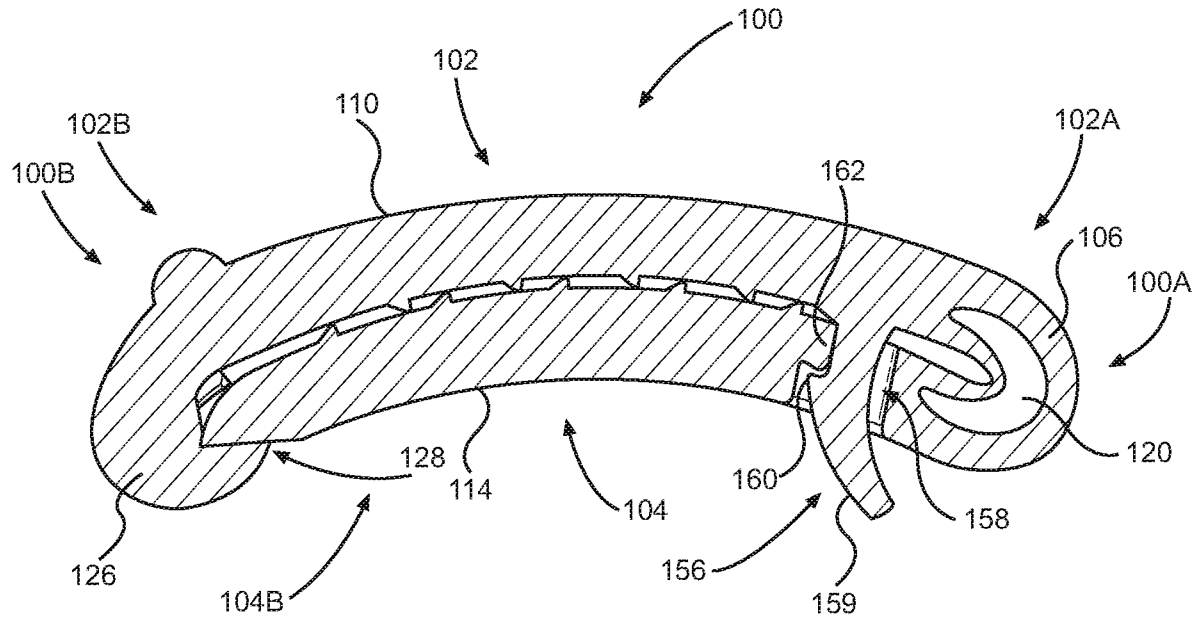
100
102
110
102B
102A
100B
162
106
100A
120
128
114
104
160
158
126
156
104B
159

FIG. 4

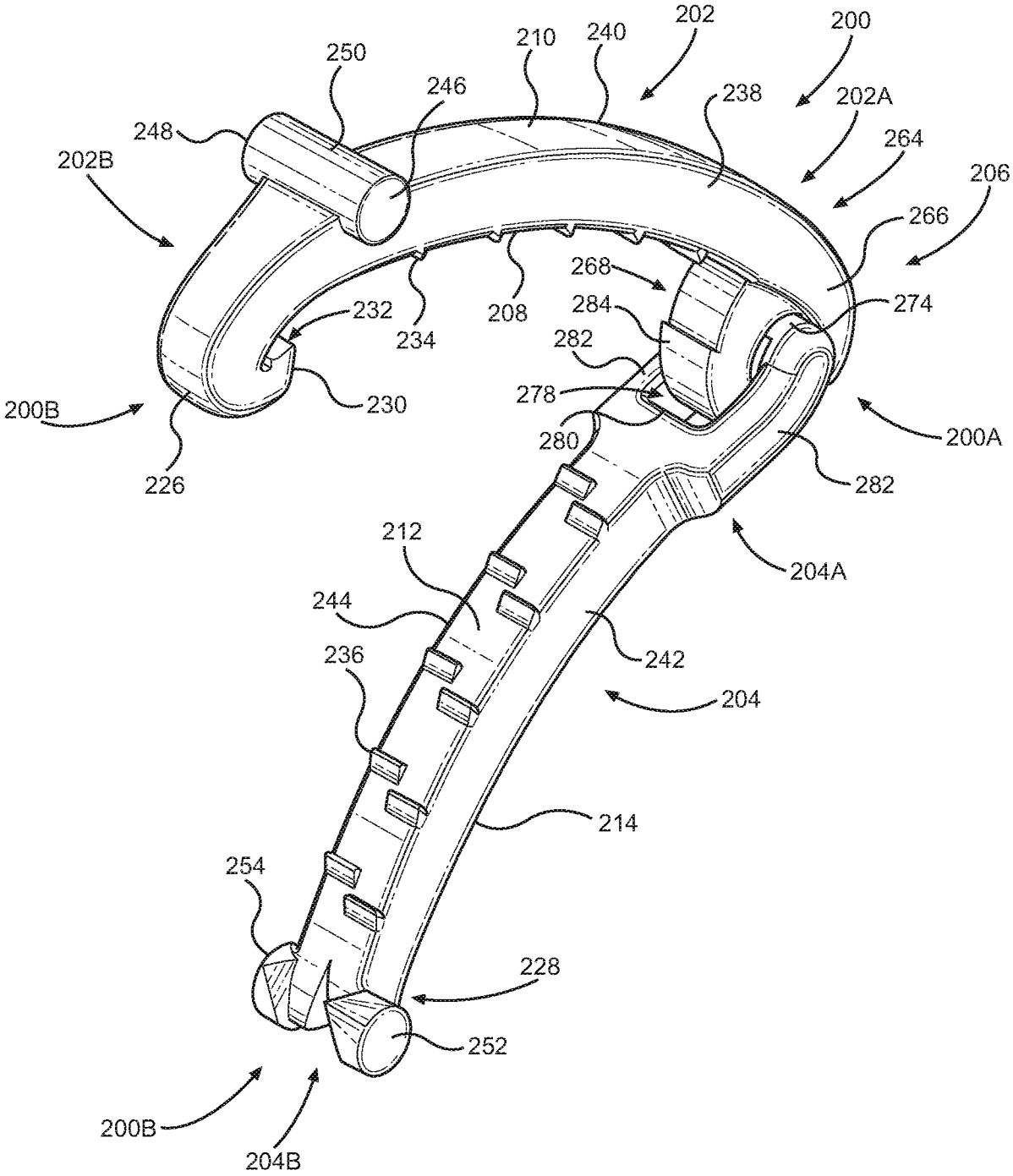
202
200
210
240
250
246
238
202A
248
264
202B
206
266
268
274
232
208
284
234
282
278
200B
230
200A
280
226
282
212
204A
244
242
236
204
214
254
228
252
200B
204B

FIG. 5

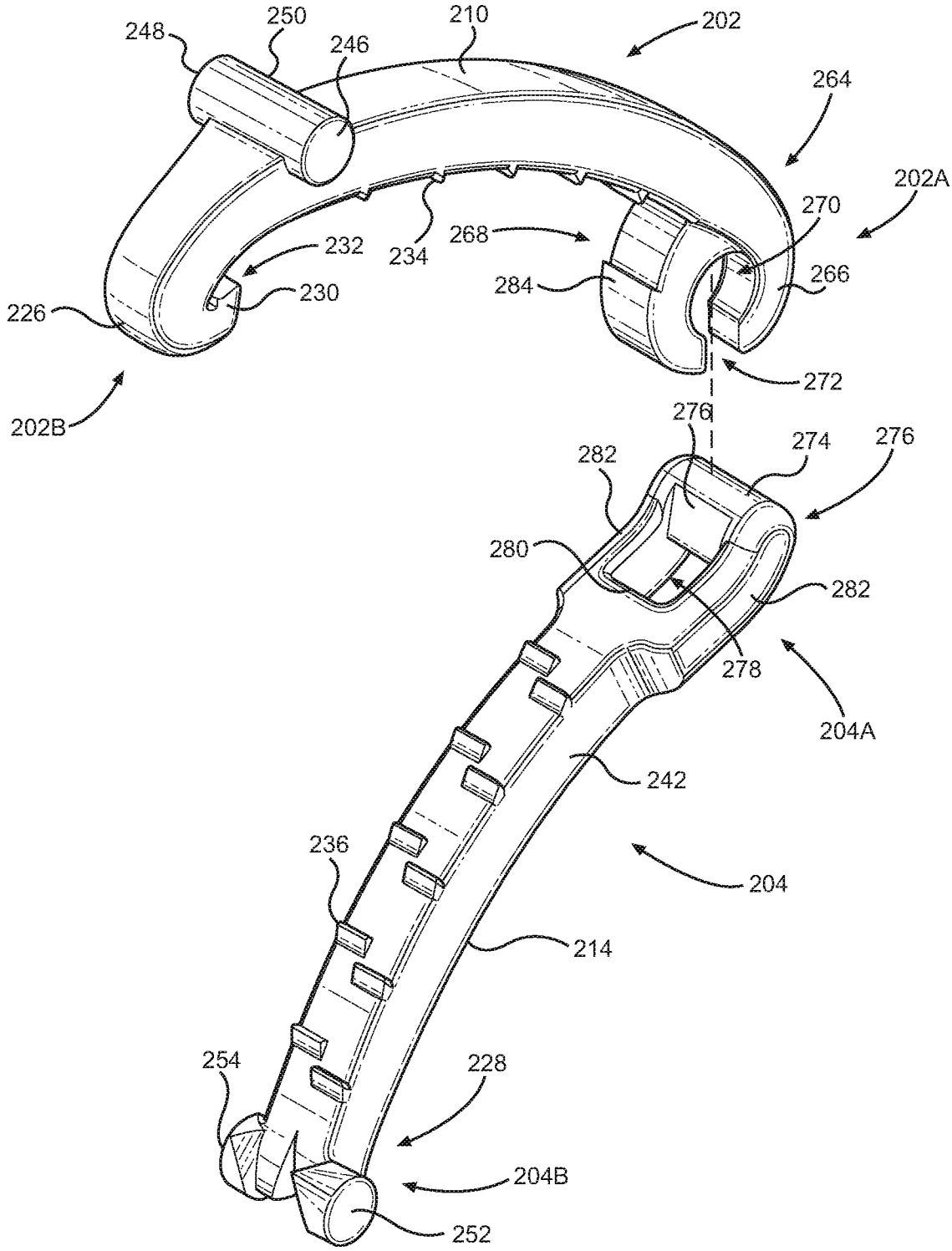
248
250
246
210
202
264
202A
270
268
232
234
230
284
266
226
272
202B
276
274
276
282
280
282
278
204A
242
236
204
214
254
228
204B
252

FIG. 6

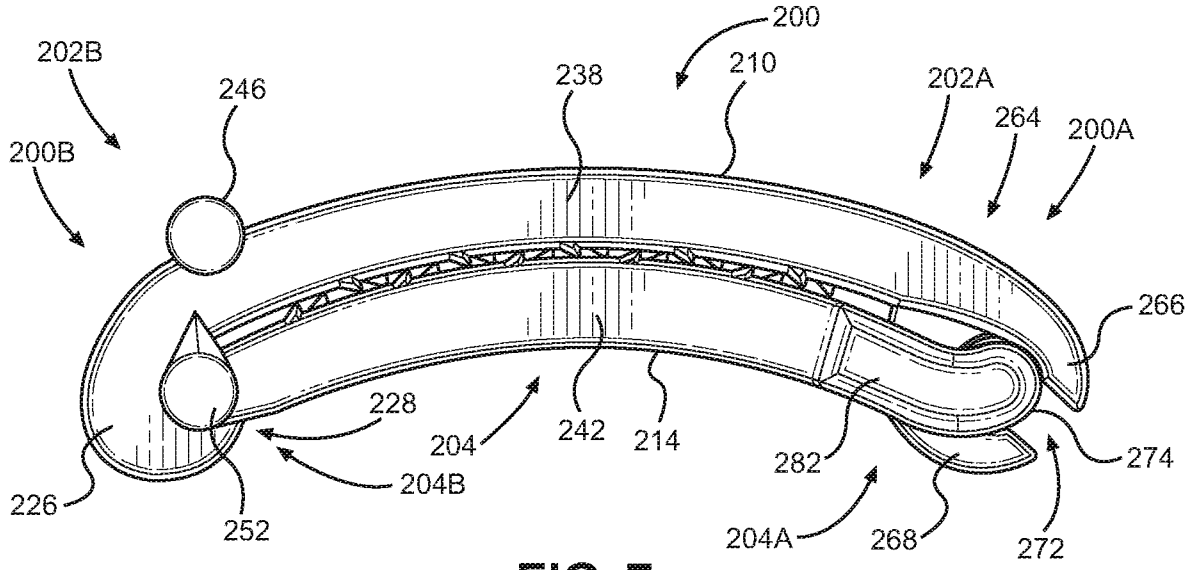
202B
246
200
238
210
202A
264
200A
200B
266
228
204
242
214
274
282
204B
226
252
204A
268
272

FIG. 7

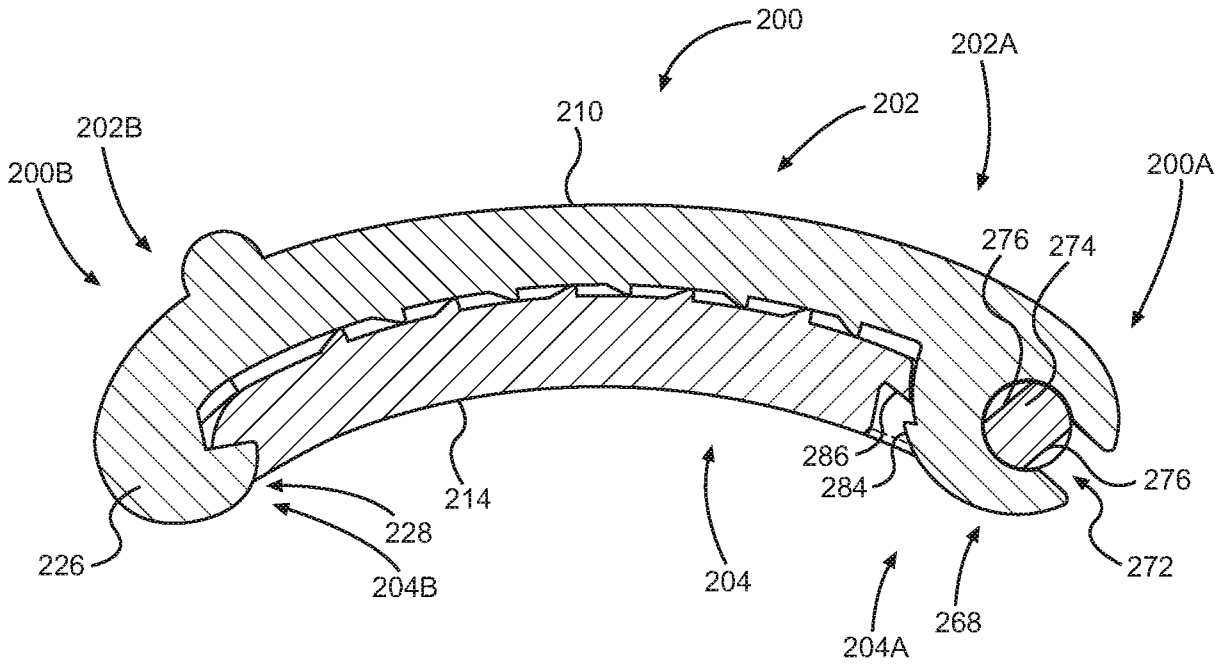
200
202A
210
202
202B
200B
200A
276
274
214
286
284
276
228
226
204
272
204B
204A
268

FIG. 8

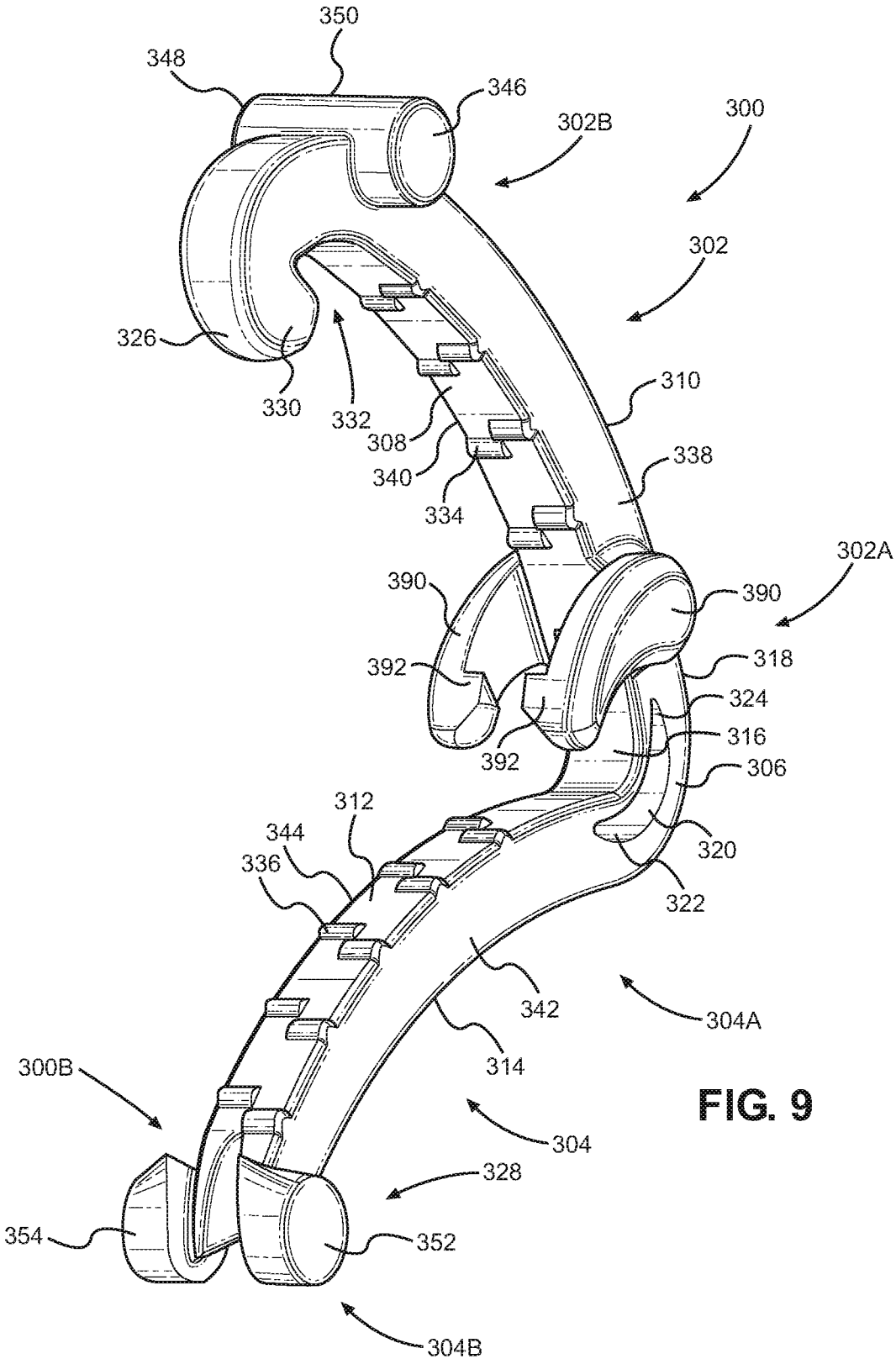
350
348
346
302B
300
302
326
330
332
310
308
340
334
338
302A
390
390
392
318
324
316
392
306
312
344
336
320
322
342
304A
314
300B
304
328
354
352
304B

FIG. 9

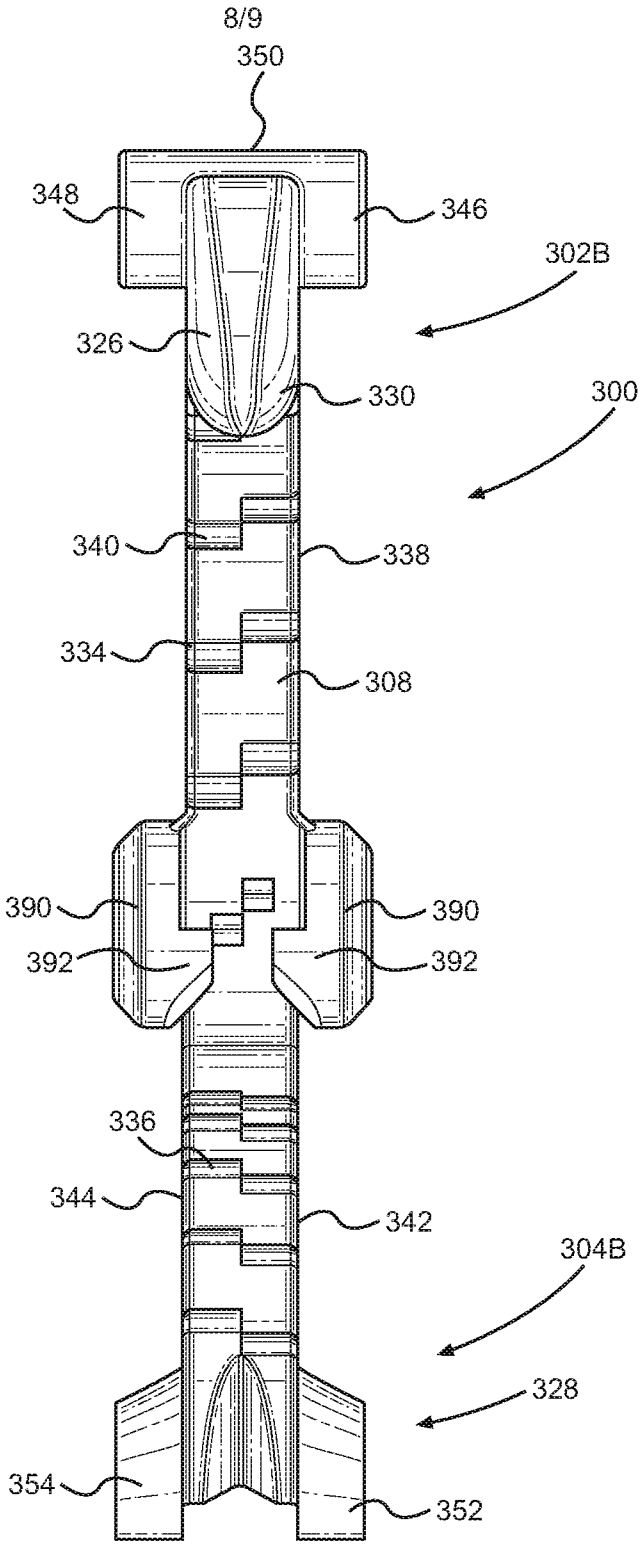
350
348
346
302B
326
330
300
340
338
334
308
390
390
392
392
336
344
342
304B
328
354
352

FIG. 10

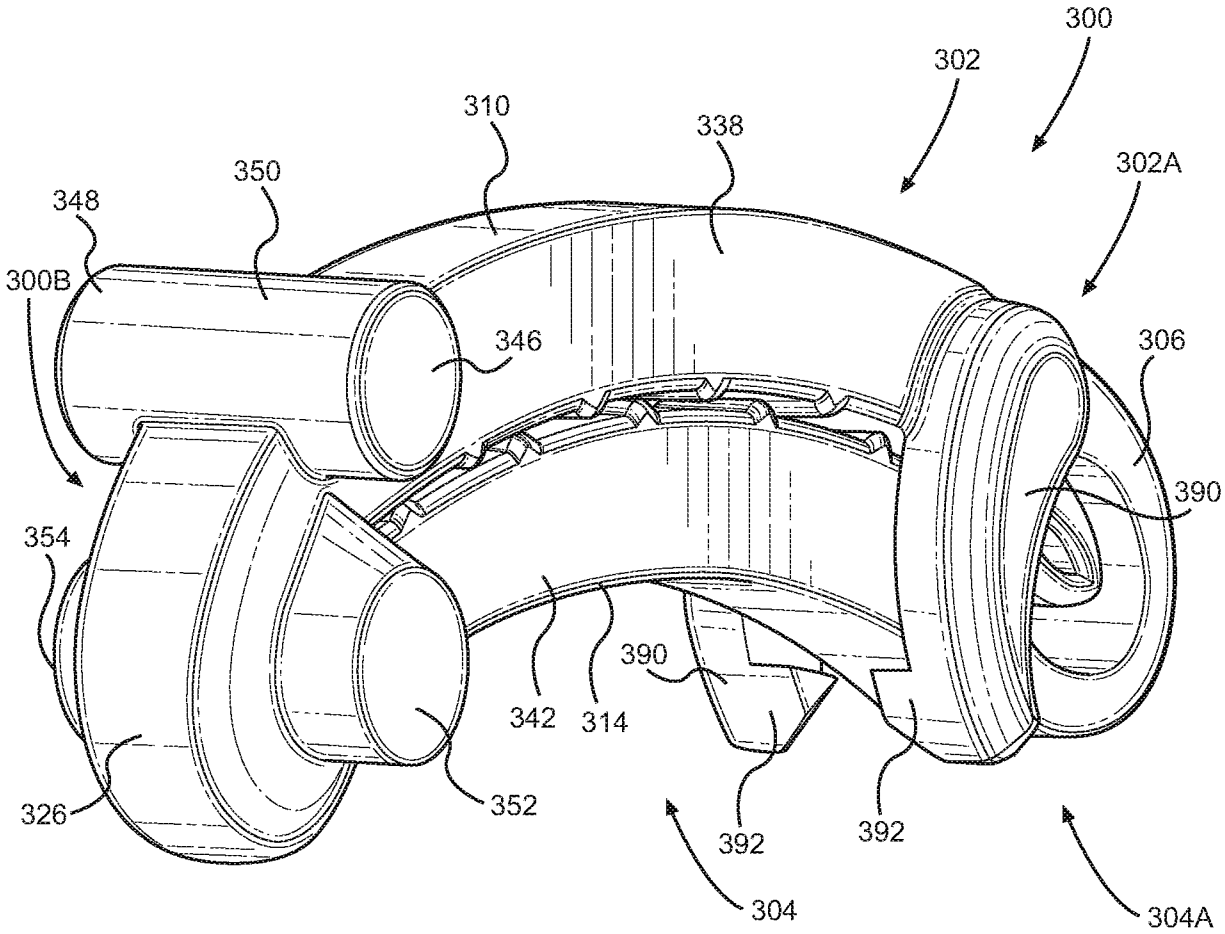
300
302
310
338
350
302A
348
300B
346
306
390
354
390
342
314
326
352
392
392
304
304A

FIG. 11

INTERNATIONAL SEARCH REPORT

International application No
PCT/US2018/060946

A. CLASSIFICATION OF SUBJECT MATTER
INV. A61B17/122
ADD.

According to International Patent Classification (IPC) or to both national classification and IPC

B. FIELDS SEARCHED

Minimum documentation searched (classification system followed by classification symbols)
A61B

Documentation searched other than minimum documentation to the extent that such documents are included in the fields searched

Electronic data base consulted during the international search (name of data base and, where practicable, search terms used)
EPO-Internal, WPI Data

C. DOCUMENTS CONSIDERED TO BE RELEVANT

Category*	Citation of document, with indication, where appropriate, of the relevant passages	Relevant to claim No.
X	US 9 220 507 B1 (PATEL MANOJ B [US] ET AL) 29 December 2015 (2015-12-29)	1,2, 8-13,18, 19,23,24
Y	column 5, line 50 - column 6, line 62 column 9, line 44 - column 10, line 21 column 10, line 46 - line 60 column 13, line 39 - column 14, line 27 figures 1A-2,5-7B,8F-8H,21A-22B	3,5, 20-22
Y	US 2010/211080 A1 (TRIVISANI DEAN [US] ET AL) 19 August 2010 (2010-08-19) paragraph [0030] - paragraph [0041] figures 1,2	3,5
Y	US 2014/243862 A1 (BAGAOISAN CELSO [US] ET AL) 28 August 2014 (2014-08-28) paragraph [0066] figures 1,2	20-22

-/--

[X] Further documents are listed in the continuation of Box C.

[X] See patent family annex.

* Special categories of cited documents :

"A" document defining the general state of the art which is not considered to be of particular relevance

"E" earlier application or patent but published on or after the international filing date

"L" document which may throw doubts on priority claim(s) or which is cited to establish the publication date of another citation or other special reason (as specified)

"O" document referring to an oral disclosure, use, exhibition or other means

"P" document published prior to the international filing date but later than the priority date claimed

"T" later document published after the international filing date or priority date and not in conflict with the application but cited to understand the principle or theory underlying the invention

"X" document of particular relevance; the claimed invention cannot be considered novel or cannot be considered to involve an inventive step when the document is taken alone

"Y" document of particular relevance; the claimed invention cannot be considered to involve an inventive step when the document is combined with one or more other such documents, such combination being obvious to a person skilled in the art

"&" document member of the same patent family

Date of the actual completion of the international search	Date of mailing of the international search report
6 February 2019	18/02/2019

Name and mailing address of the ISA/	Authorized officer
European Patent Office, P.B. 5818 Patentlaan 2 NL - 2280 HV Rijswijk Tel. (+31-70) 340-2040, Fax: (+31-70) 340-3016	Ebbinghaus, M

1

Form PCT/ISA/210 (second sheet) (April 2005)

INTERNATIONAL SEARCH REPORT

International application No
PCT/US2018/060946

C(Continuation). DOCUMENTS CONSIDERED TO BE RELEVANT

Category*	Citation of document, with indication, where appropriate, of the relevant passages	Relevant to claim No.
A	US 2005/165424 A1 (GALLAGHER RICHARD J [US] ET AL) 28 July 2005 (2005-07-28) the whole document	1
A	EP 0 122 046 A1 (ETHICON INC [US]) 17 October 1984 (1984-10-17) the whole document	1
A	US 2008/039879 A1 (CHIN ALBERT K [US] ET AL) 14 February 2008 (2008-02-14) paragraph [0135] figure 4F	1

1

INTERNATIONAL SEARCH REPORT

Information on patent family members

International application No
PCT/US2018/060946

Patent document cited in search report	Publication date	Patent family member(s)	Publication date
US 9220507 B1	29-12-2015	NONE	
US 2010211080 A1	19-08-2010	NONE	
US 2014243862 A1	28-08-2014	AU 2012325718 A1	01-05-2014
		AU 2017258814 A1	23-11-2017
		CA 2852774 A1	25-04-2013
		EP 2768399 A1	27-08-2014
		EP 3305216 A1	11-04-2018
		EP 3305217 A1	11-04-2018
		JP 2014534014 A	18-12-2014
		JP 2018047367 A	29-03-2018
		US 2014243862 A1	28-08-2014
		US 2018168659 A1	21-06-2018
		WO 2013059826 A1	25-04-2013
US 2005165424 A1	28-07-2005	CA 2554787 A1	18-08-2005
		EP 1718218 A2	08-11-2006
		US 2005165424 A1	28-07-2005
		WO 2005074419 A2	18-08-2005
EP 0122046 A1	17-10-1984	EP 0122046 A1	17-10-1984
		JP S59168848 A	22-09-1984
US 2008039879 A1	14-02-2008	US 2008039879 A1	14-02-2008
		WO 2008020975 A2	21-02-2008