Nov. 6, 1934. H. E. WETHERBEE 1,980,021

METHOD OF CHEMICALLY ETCHING GLASS SURFACES

Filed May 4, 1933

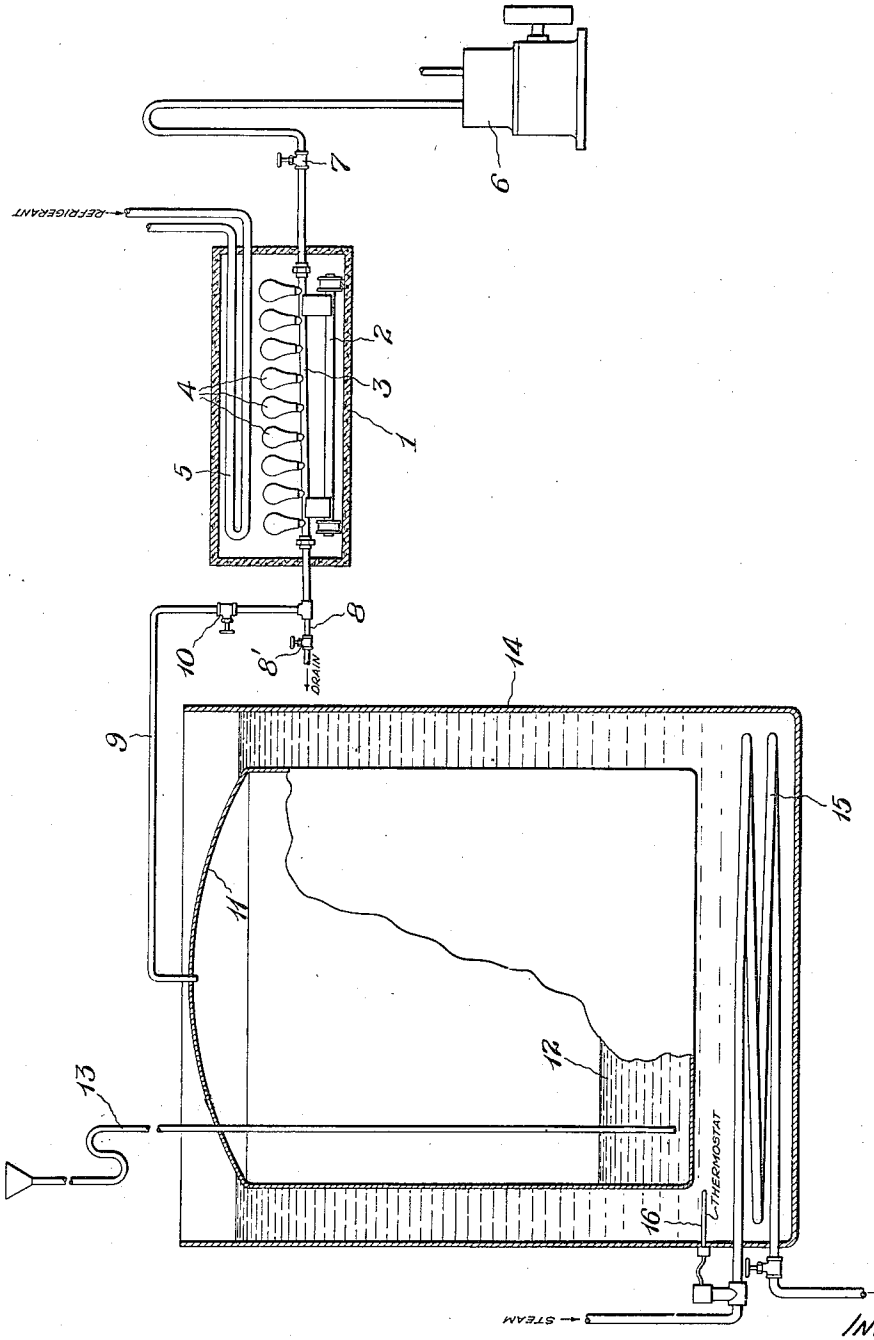

INVENTOR:
HERBERT E. WETHERBEE

By Sayvell and Wesseler
ATTORNEYS

Patented Nov. 6, 1934 1,980,021

UNITED STATES PATENT OFFICE

1,980,021

METHOD OF CHEMICALLY ETCHING GLASS SURFACES

Herbert E. Wetherbee, Cleveland Heights, Ohio, assignor, by mesne assignments, of seven-tenths to Richard F. Grant and one-tenth to Benton H. Grant, both of New York, N. Y.

Application May 4, 1933, Serial No. 669,384

26 Claims. (Cl. 41—42)

My invention particularly relates to methods for efficiently and economically, chemically etching or frosting glass surfaces. The improved methods particularly relate to the formation of frosted lamp bulbs, automobile head lights, and articles of a similar nature.

The annexed description sets forth in detail certain steps embodying the principle of my improved method, illustrated by the accompanying drawing, and certain materials utilized in the working of the method, such steps and materials being, however, only illustrative of the various series of steps and the various materials which may be utilized in carrying out the invention.

The accompanying drawing is a diagrammatic view of apparatus suitable for working my improved method.

Referring to the accompanying drawing, a cork-lined, closed receptacle 1 contains a base member 2 upon which is mounted a pipe 3 intersecting the side walls of the receptacle 1 and adapted to receive within the receptacle 1 the socket ends of a plurality of lamp bulbs 4 whose interiors thus communicate with the pipe 3. Also intersecting the wall of the receptacle 1 and passing through the chamber thereof is a pipe 5 by means of which refrigerant may be circulated in the receptacle 1. Outside of the receptacle 1 the pipe 3 at one end communicates with a pump 6 by means of which air may be exhausted from the bulbs 4, communication between the bulbs 4 and the pump 6 being controlled by a valve 7. The pipe 3 passes through the receptacle 1 in an inclined position so as to permit draining of the pipe 3 toward that end thereof which is opposite the end leading to the pump 6, as indicated by the drain pipe extension 8 which is controlled by a valve 8'.

Communicating with the pipe 3 adjacent to and interiorly of the valve 8' is a pipe line 9 controlled by a valve 10 which communicates with the interior of a tank 11. For a reason hereinafter fully explained, the capacity of the tank 11 is much larger than that of the combined capacities of the bulbs 4. The tank 11 serves as a reservoir for atmosphere charged with the vapor of a solvent for the etching agent, such etching agent being contained in said vapor in gaseous state. I indicate by "12" a solution of the etching agent in the tank 11, this solution being supplied to the tank 11, as desired, through the medium of a supply pipe 13. In order that the solution 12 may be heated, I enclose the tank 11 within a larger tank 14 from which the tank 11 is spaced and provide means for supplying water to the space between the tanks 11 and 14 and heat the water by means of a steam line 15. The temperature at which the water jacket thus provided for the tank 11 is maintained is controlled by a thermostat 16.

The principle of my improved etching method depends upon the depositing upon the glass surface to be etched of minute segregated globules of a liquid in which the etching agent is soluble so that the liquid may promote the etching action upon the portions of the glass in contact with such liquid globules, the etching action thus being more rapid and complete upon those portions of the glass than the etching action effected upon the other portions of the glass with which such liquid globules are not in contact. I prefer to deposit the liquid globules containing the etching agent upon segregated portions of the glass by creating a partial vacuum to which the glass surface to be etched is subjected, and then replacing this partial vacuum by an atmosphere saturated with the vapor of the liquid in which the etching agent is soluble, preferably water vapor, this vapor containing the etching agent in a gaseous state, preferably hydrofluoric acid gas, at a temperature substantially higher than that to which the glass surface to be etched is subjected. Due to the expansion of the atmosphere and the contact thereof with the glass surface of materially lower temperature, the water vapor in the atmosphere is condensed to minute globules which are deposited upon the surface of the glass, said water globules acting as solvent for the hydrofluoric acid and thus promoting the etching action of the latter.

Preferably, also, in order to effect sufficient and suitable deposits of the water globules upon the comparatively cool glass surface, the chamber from which the atmosphere charged with the water vapor and containing the hydrofluoric acid gas is obtained is materially larger than the chamber which contains the glass surface to be etched and is subject to the partial vacuum.

Illustrating the above-described principle which has been generally outlined, by specific reference to the accompanying drawing, assuming the valves 8' and 10 to be closed, and the valve 7 to be open, a partial vacuum is created in the bulbs 4 by the pump 6. Also, the bulbs 4 are chilled through the medium of refrigerant circulated in the pipe 5. The chilling of the bulbs 4 may be, for instance, down to 0° C. The atmosphere in the tank 11 charged with the water vapor and containing hydrofluoric acid gas is maintained at a temperature substantially higher than that of the chilled

bulbs 4; for instance, a temperature from 60° to 80° C. Then the valve 7 is closed and the valve 10 opened, which permits the atmosphere saturated with water vapor and containing hydrofluoric acid gas, or other suitable etching agent, to rush into the bulbs 4 from the tank 11. When the heated atmosphere saturated with water vapor and containing hydrofluoric acid gas rushes into the chilled bulbs 4, the water vapor is condensed and deposited in minute globules upon the inner surface of the bulbs 4, these water globules containing dissolved hydrofluoric acid. Since the water promotes the etching action upon the glass of the hydrofluoric acid contained in the water, the minute portions of the glass in contact with the water globules are rapidly and deeply etched by the acid compared to the etching upon the other portions of the glass. Since the character of the etching can be controlled by the amount of water vapor and the concentration of hydrofluoric gas, and the variation in temperatures between the comparatively cool bulbs and the hot mixture of etching agent and solvent therefor, any desired etched or frosted condition of the glass can be quickly secured. The etching action upon the segregated portions of glass in contact with the water globules can be continued so long as any water remains to promote the action.

After one series of bulbs 4 has been etched, the valve 10 can be closed, and the etched series of bulbs replaced by another series of bulbs 4 and the operation repeated. Any hydrofluoric acid solution which accumulates in the pipe 3 may be drawn off through the drain 8.

In the event that the glass article whose surface to be etched is a solid, such as an automobile lens, or it is desired to etch the outside surface of chambered glass articles, the compartment in which such articles are positioned for the etching operation is subjected to the chilling action and partial vacuum, and then the comparatively hot atmosphere saturated with water vapor and containing the hydrofluoric acid gas allowed to expand into that compartment.

What I claim is:

1. The method of chemically etching glass surfaces which consists in subjecting the surface to a partial vacuum and then replacing the partial vacuum with an atmosphere charged with the vapor of a solvent for the etching agent and containing the etching agent in gaseous state.

2. The method of chemically etching glass surfaces which consists in subjecting the surface to an expanding atmosphere of a temperature materially higher than the glass surface and charged with the vapor of a solvent for the etching agent and containing the etching agent in gaseous state.

3. The method of chemically etching glass surfaces which consists in chilling the surface and subjecting it to a partial vacuum, and then replacing the partial vacuum with an atmosphere of materially higher temperature than the surface, the atmosphere being charged with the vapor of a solvent for the etching agent and containing the etching agent in gaseous state.

4. The method of chemically etching the interior surface of a lamp bulb which consists in partially exhausting the air from the bulb and then replacing the partial vacuum with an atmosphere charged with the vapor of a solvent for the etching agent and containing the etching agent in gaseous state.

5. The method of chemically etching the interior surface of a lamp bulb which consists in partially exhausting the air from the bulb and chilling the bulb to substantially 0° C., and then replacing the partial vacuum by an atmosphere heated to from 60° to 80° C. and charged with the vapor of a solvent for the etching agent and containing the etching agent in gaseous state.

6. The method of chemically etching glass surfaces which consists in subjecting the surface to a partial vacuum, and then replacing the partial vacuum by an amosphere saturated with water vapor and containing hydrofluoric acid gas.

7. The method of chemically etching glass surfaces which consists in chilling the surface and then subjecting it to an expanding atmosphere of materially higher temperature than the chilled surface and saturated with water vapor and containing hydrofluoric acid gas.

8. The method of chemically etching glass surfaces which consists in subjecting the surface to a partial vacuum and chilling the same to substantially 0° C., and then replacing the partial vacuum with an atmosphere of from 60° to 80° C. and saturated with water vapor and containing hydrofluoric acid gas.

9. The method of chemically etching the interior surface of a lamp bulb which consists in partially exhausting the air from the bulb and then replacing the partial vacuum with an atmosphere saturated with water vapor and containing hydrofluoric acid gas.

10. The method of chemically etching the interior surface of a lamp bulb which consists in partially exhausting the air from the bulb and chilling said surface, and then replacing the partial vacuum with an atmosphere of a temperature materially higher than that of the chilled bulb surface, said atmosphere being saturated with water vapor and containing hydrofluoric acid gas.

11. The method of chemically etching the interior surface of a lamp bulb which consists in partially exhausting the air from the bulb and chilling said surface to substantially 0° C., and then replacing the partial vacuum with an atmosphere of a temperature from 60° to 80° C. and saturated with water vapor and containing hydrofluoric acid gas.

12. The method of chemically etching the interior surface of a lamp bulb which consists in partially exhausting the air from the bulb and then replacing the partial vacuum with an atmosphere containing the etching agent in gaseous state and additionally charged with a vapor which is other than that of the etching agent, and which affects the action of the etching agent.

13. The method of chemically etching the interior surface of a lamp bulb which consists in partially exhausting the air from the bulb and then replacing the partial vacuum with an atmosphere containing hydrofluoric acid gas and additionally charged with a vapor which is other than that of hydrofluoric acid, and which affects the etching action of hydrofluoric acid.

14. The method of chemically etching glass surfaces which consists in subjecting the surface to an atmosphere containing an etching agent in gaseous state and additionally charged with a vapor which is other than that of the etching agent and which affects the action of the etching agent, a temperature differential being provided between the atmosphere and the surface sufficient to effect deposition of said vapor upon the surface in segregated globules.

15. The method of chemically etching glass surfaces which consists in subjecting the surface to an atmosphere of a temperature materially higher than the glass surface and containing an etching agent in gaseous state and additionally charged with a vapor which is other than that of the etching agent and which affects the action of the etching agent.

16. The method of chemically etching glass surfaces which consists in subjecting the surface to an atmosphere containing an etching agent in gaseous state and additionally charged with the vapor of a solvent for the etching agent, a temperature differential being provided between the atmosphere and the surface sufficient to effect deposition of said vapor upon the surface in segregated globules.

17. The method of chemically etching the interior surface of a lamp bulb which consists in partially exhausting the air from the bulb and then replacing the partial vacuum with an atmosphere containing an etching agent in gaseous state and additionally charged with a vapor which is other than that of the etching agent and which affects the action of the etching agent, a temperature differential being provided between the atmosphere and the surface sufficient to effect deposition of said vapor upon the surface in segregated globules.

18. The method of chemically etching the interior surface of a lamp bulb which consists in partially exhausting the air from the bulb and then replacing the partial vacuum with an atmosphere containing an etching agent in gaseous state and additionally charged with the vapor of a solvent for the etching agent, a temperature differential being provided between the atmosphere and the surface sufficient to effect deposition of said vapor upon the surface in segregated globules.

19. The method of chemically etching the interior surface of a lamp bulb which consists in partially exhausting the air from the bulb and then replacing the partial vacuum with an atmosphere of a temperature materially higher than said bulb surface and containing an etching agent in gaseous state and additionally charged with a vapor which is other than that of the etching agent and which affects the action of the etching agent.

20. The method of chemically etching glass surfaces which consists in subjecting the surface to an atmosphere containing hydrofluoric acid gas and additionally charged with a vapor which is other than that of hydrofluoric acid and which affects the etching action of hydrofluoric acid, a temperature differential being provided between the atmosphere and the surface sufficient to effect deposition of said vapor upon the surface in segregated globules.

21. The method of chemically etching glass surfaces which consists in subjecting the surface to an atmosphere of a temperature materially higher than the glass surface and containing hydrofluoric acid gas and additionally charged with a vapor which is other than that of hydrofluoric acid and which affects the etching action of hydrofluoric acid.

22. The method of chemically etching glass surfaces which consists in subjecting the surface to an atmosphere of a temperature materially higher than the glass surface and charged with water vapor and containing hydrofluoric acid gas.

23. The method of chemically etching the interior surface of a lamp bulb which consists in partially exhausting the air from the bulb and then replacing the partial vacuum with an atmosphere containing hydrofluoric acid gas and additionally charged with a vapor which is other than that of hydrofluoric acid and which affects the etching action of hydrofluoric acid, a temperature differential being provided between the atmosphere and the surface sufficient to effect deposition of said vapor upon the surface in segregated globules.

24. The method of chemically etching the interior surface of a lamp bulb which consists in partially exhausting the air from the bulb and then replacing the partial vacuum with an atmosphere of a temperature materially higher than said bulb surface and charged with water vapor and containing an etching agent in gaseous state.

25. The method of chemically etching glass surfaces which consists in subjecting the surface to an expanding atmosphere of a temperature materially higher than the glass surface, the atmosphere containing the etching agent in gaseous state and being additionally charged with a vapor which is other than that of the etching agent and which affects the action of the etching agent.

26. The method of chemically etching the interior surface of a lamp bulb which consists in subjecting such surface to an expanding atmosphere of a temperature materially higher than the surface, the atmosphere containing an etching agent in gaseous state and being additionally charged with a vapor which is other than that of the etching agent and which affects the action of the etching agent.

HERBERT E. WETHERBEE.