Oct. 29, 1946. W. A. TOLSON 2,410,317

HEAT RESPONSIVE DEVICE

Filed May 1, 1943 2 Sheets-Sheet 1

Fig. 1.

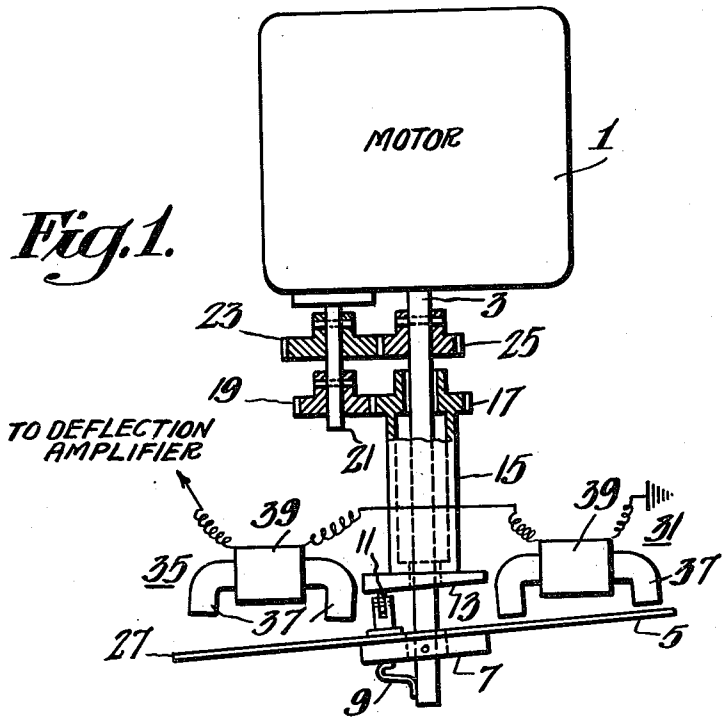

Fig. 2.

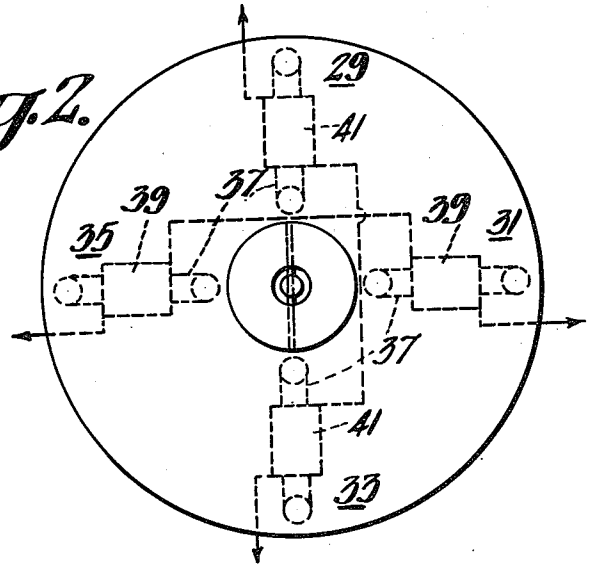

Inventor

William A. Tolson

By C. O. Fuller

Attorney

Oct. 29, 1946. W. A. TOLSON 2,410,317

HEAT RESPONSIVE DEVICE

Filed May 1, 1943 2 Sheets-Sheet 2

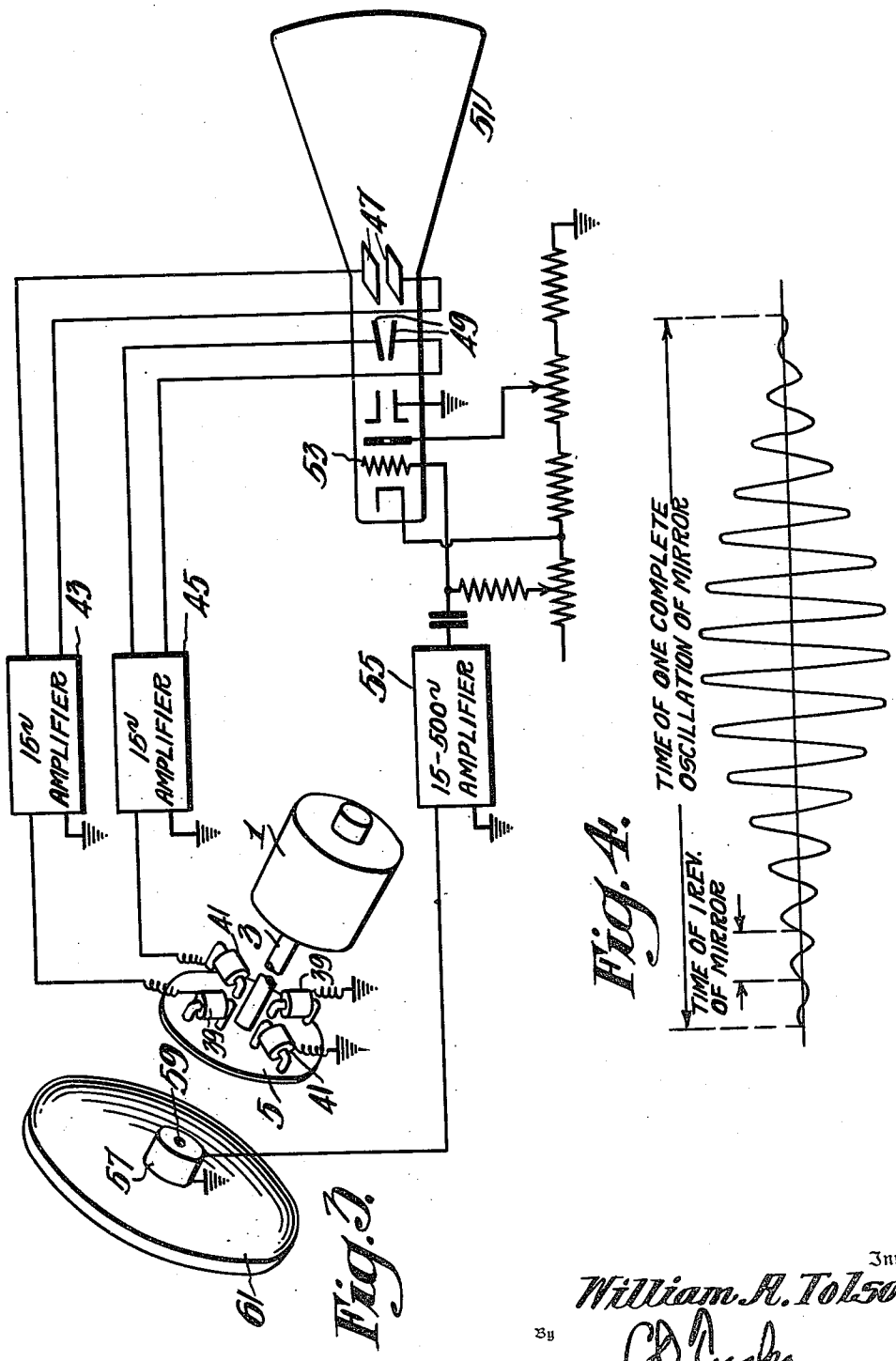

Fig. 3.

Fig. 4.

Inventor

William A. Tolson

By C. D. Tuska

Attorney

Patented Oct. 29, 1946 2,410,317

UNITED STATES PATENT OFFICE

2,410,317

HEAT RESPONSIVE DEVICE

William A. Tolson, Princeton, N. J., assignor to Radio Corporation of America, a corporation of Delaware

Application May 1, 1943, Serial No. 485,315

9 Claims. (Cl. 178—6.8)

1

This invention relates to heat responsive devices, and especially to a system for producing visible images of bodies radiating infra-red heat rays.

In copending application Serial No. 470,520, filed December 29, 1942, by Ray D. Kell and William A. Tolson, for Heat responsive indicators, there is disclosed a heat responsive device by means of which a visible indication of a body radiating infra-red rays may be produced. That device provides a system in which the direction of the body radiating the rays may be determined. The system disclosed in the said copending application does not lend itself to resolving two or more images when the heat is radiated by two or more objects. In fact, the system of the copending application, instead of resolving two or more sources of infra-red radiations, will integrate and form a single image of the radiating bodies and form a single indication of the relative direction of the "center of heat" of the area under observation.

The instant invention is distinguished with respect to the above described copending application in that several different sources of infra-red radiations may be resolved into corresponding visible images. If the heat radiating surfaces are of large area compared to the total field which is scanned, a silhouette or, in some cases, a half-tone "heat picture" will be formed so that the heat radiating body may be generally identified.

Thus, one of the objects of the instant invention is to provide an improved heat responsive system for forming visible images of one or more sources of infra-red radiations. Another object is to provide an improved system for resolving the images from a pair of heat radiating bodies whereby separate visible images may be formed to show the approximate heat radiating surfaces and the locations of such bodies. An additional object is to provide an improved means for and method of scanning an area including one or more heat radiating objects, thereby to establish a silhouette or half-tone "heat" picture of the scanned area.

The invention will be described by referring to the accompanying drawings, in which Figure 1 is a plan view, partly in section, of the scanning mechanism employed in the invention, Figure 2 is an elevational view of a portion of the scanning mechanism, Figure 3 is a schematic diagram of one embodiment of the invention, and Figure 4 is a graph illustrating the nature of the scanning pattern. Similar reference numerals indicate similar elements in the drawings.

2

Referring to Fig. 1, a motor 1 including a shaft 3 is arranged to drive a mirror 5 which is pivoted on the end of the shaft. The pivoted portion 7 is biased by a spring 9, so that a roller 11, secured to the mirror, engages a cam surface 13.

The cam surface 13 is a portion of a sleeve 15, which surrounds the shaft 3. The sleeve includes a gear 17, which meshes with a second gear 19. The second gear is secured to a shaft 21, on which is fastened a third gear 23. The last mentioned gear is driven by gear 25, which is fastened to the motor shaft 3. By way of example, the gear train is arranged so that the sleeve 15 is rotated fourteen times, while the motor shaft is rotated fifteen times. This ratio will establish a helical scanning pattern, whereby the image will be scanned as the mirror is moved past a heat responsive member hereinafter described. It should be realized that moving the image past the aperture is equivalent to having a fixed image and a movable scanning means.

The mirror 5 is formed on the surface of a magnetic plate 27. The magnetic plate is associated with four field structures 29, 31, 33, 35. Each field structure includes a permanently magnetized core 37 and a field winding 39—41. As the plate 27 rotates and pivots, it successively approaches the field structures 29, etc. and thus induces electromotive forces in the field windings. The field windings 39—41 are serially connected in diagonal pairs, as shown in Figs. 2 and 3.

Referring to Fig. 3, it will be seen that the diagonally connected field windings 39—41 are respectively connected to amplifiers 43—45. The outputs of the amplifiers are applied to vertical and horizontal deflecting elements 47—49 of a cathode ray tube 51. The cathode ray tube includes the usual anode and cathode connections.

The control electrode 53 of the cathode ray tube 51 is connected to the output of an amplifier 55, whose input signals are derived from a heat responsive cell 57 which includes a small aperture 59. The heat responsive cell may be of the type disclosed in Wolff Patent 2,234,328, granted March 11, 1941, for Radiant energy receiving devices. The cell is positioned so that the image will be applied to the aperture 59, in order that the image may establish the required scanning. The aperture size should be of the order of the smallest subdivision of the image which is to be reproduced. The heat responsive portion of the device and the scanning mechanism preferably include a spherical reflector 61, which applies the image to the mirror 5 and hence to the aperture 59.

The operation of the system is as follows: The heat rays from an area to be scanned are reflected from the spherical mirror 61 to the rotating mirror 5. As the mirror 5 rotates, deflecting currents are synchronously generated and are applied in 90° phase relation to the deflecting amplifiers 43—45. These deflecting currents cause the cathode ray beam 51 to be rotated in synchronism with the mirror. As each element of the heat image is applied to the heat responsive cell 59, a corresponding potential is established which is applied to the control electrode 53 of the cathode ray tube. This potential varies in accordance with the heat rays to cause a corresponding variation of the cathode ray beam and hence an indication on the fluorescent screen of the cathode ray tube. Thus, a picture or image is formed which corresponds to the infrared or heat rays which are radiated from the objects within the scene to be scanned. The nature of the scanning is represented in linear coordinates in Fig. 4, which shows the oscillations of the mirror.

The foregoing system will indicate the locations of the heat radiating bodies with respect to the central axis of the scanning pattern. If it is desired to indicate the approximate distance of the source of the heat radiations, a pair of the devices may be located on the common base line, whereby a simple system of triangulation may be employed to indicate the distance of any one of the objects within a scanned area.

I claim as my invention:

1. A heat responsive device including means for establishing an image of a scene including heat radiating objects, means for scanning said image whereby said image is subdivided into elements, a heat detector for converting said applied image elements into electric currents, and an indicator including elements responsive to scanning voltages and elements responsive to applied currents, said current responsive elements being connected to said heat detector for indicating said electric currents and said elements responsive to scanning voltages being energized in synchronism with the operation of said scanning means thereby to form a visible image of said scene.

2. A heat responsive device including means for establishing an image of a scene including heat radiating objects, means for scanning said scene whereby said scene is subdivided into elements, a heat detector, means for applying said elements to said heat detector to establish electric currents corresponding to said applied elements, and an indicator including elements responsive to scanning voltages and elements responsive to applied currents, said current responsive elements being connected to said heat detector for indicating said electric currents and said elements responsive to scanning voltages being energized in synchronism with the operation of said scanning means thereby to form a visible image of said scene.

3. A heat responsive device including means for establishing an image of a scene including heat radiating objects, means for scanning said scene whereby said scene is divided into elements, means for generating electric currents varying in synchronism with said scanning, heat responsive means for converting applied heat into electric currents, means for applying said scene elements to said heat responsive means to convert said elements into corresponding electric currents, a cathode ray tube including a fluorescent screen and ray deflecting means and a ray controlling means, means connecting said deflecting means and said generating means whereby said ray is deflected in synchronism with said scanning, and means for applying said corresponding currents to said ray controlling means to vary said ray in accordance with said elements whereby an image of said objects is established on said fluorescent screen.

4. A heat responsive device including means for establishing a heat image of a scene including heat radiating objects, means for scanning said image whereby said image is divided into elements, means for generating electric currents varying in synchronism with said scanning, heat responsive means for converting applied heat into electric currents, means for applying said image elements to said heat responsive means to convert said elements into corresponding electric currents, a cathode ray tube including a fluorescent screen and ray deflecting means and a ray controlling means, means connecting said deflecting means and said generating means whereby said ray is deflected in synchronism with said scanning, and means for applying said corresponding currents to said ray controlling means to vary said ray in accordance with said elements whereby a visible image of said objects is established on said fluorescent screen.

5. A heat responsive device including means for establishing an image of a scene including heat radiating objects, means for scanning said scene whereby said scene is divided into elements, means for generating quadrature phase electric currents varying in synchronism with said scanning, heat responsive means for converting applied heat into electric currents, means for applying said scene elements to said heat responsive means to convert said elements into corresponding electric currents, a cathode ray tube including a fluorescent screen and ray deflecting means and a ray controlling means, means for applying said quadrature phase currents to said deflecting means whereby said ray is deflected in synchronism with said scanning, and means for applying said corresponding currents to said ray controlling means to vary said ray in accordance with said elements whereby an image of said objects is established on said fluorescent screen.

6. A heat responsive device including means for establishing a heat image of a scene including heat radiating objects, means for scanning said image whereby said image is divided into elements, means for generating quadrature phase electric currents varying in synchronism with said scanning, heat responsive means for converting applied heat into electric currents, means for applying said image elements to said heat responsive means to convert said elements into corresponding electric currents, a cathode ray tube including a fluorescent screen and ray deflecting means and a ray controlling means, means for applying said quadrature phase currents to said deflecting means whereby said ray is deflected in synchronism with said scanning, and means for applying said corresponding currents to said ray controlling means to vary said ray in accordance with said elements whereby a visible image of said objects is established on said fluorescent screen.

7. A heat responsive device including a spherical mirror and a rotating and oscillating mirror for forming a moving image of a scene including objects radiating heat, an apertured heat responsive means for converting applied heat into electric currents, said apertured heat responsive

means being located so that said image is scanned as it passes said aperture, means for generating quadrature phase currents varying in synchronism with said mirror movements, a cathode ray tube including a fluorescent screen and deflecting electrodes and ray controlling means, means for applying said quadrature phase currents to said electrodes so that said ray is deflected in synchronism with said mirror movements, and means for applying the currents derived from said heat responsive means to said ray controlling means so that said ray is varied to correspond to the image scanned by said apertured heat responsive means whereby a visible image corresponding to said scene is formed by the application of said ray to said cathode ray tube fluorescent screen.

8. A device according to claim 7 including amplifiers located between said generating means and said deflecting electrodes, and an amplifier interposed between said apertured heat responsive means and said ray controlling means.

9. A heat responsive device including a spherical mirror and a rotating and oscillating mirror, including a magnetic portion, for forming a moving image of a scene including objects radiating heat, an apertured heat responsive means for converting applied heat into electric currents, said apertured heat responsive means being located so that said image is scanned as it passes said aperture, means for generating currents varying in synchronism with said mirror movements consisting of four flux responsive field structures located at ninety-degree intervals with respect to the axis of said mirror and responsive to movements of the magnetic portion of said mirror, a cathode ray tube including a fluorescent screen and deflecting electrodes and ray controlling means, means for applying the currents generated in said field structures to said electrodes so that said ray is deflected in synchronism with said mirror movements, and means for applying the currents derived from said heat responsive means to said ray controlling means so that said ray is varied to correspond to the image scanned by said apertured heat responsive means whereby a visible image corresponding to said scene is formed by the application of said ray to said cathode ray tube fluorescent screen.

WILLIAM A. TOLSON.