Dec. 31, 1929. LE ROY C. BAUMANN 1,741,274

RADIO REPRODUCER

Filed March 6, 1929

Fig. 1.

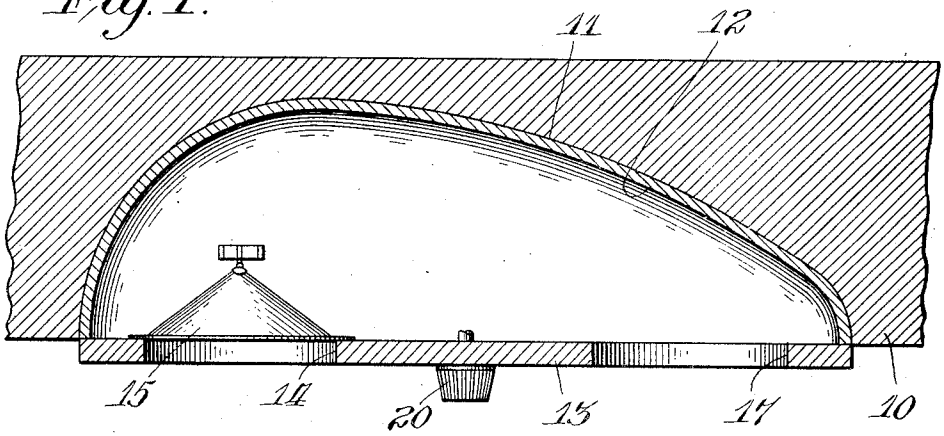

Fig. 2.

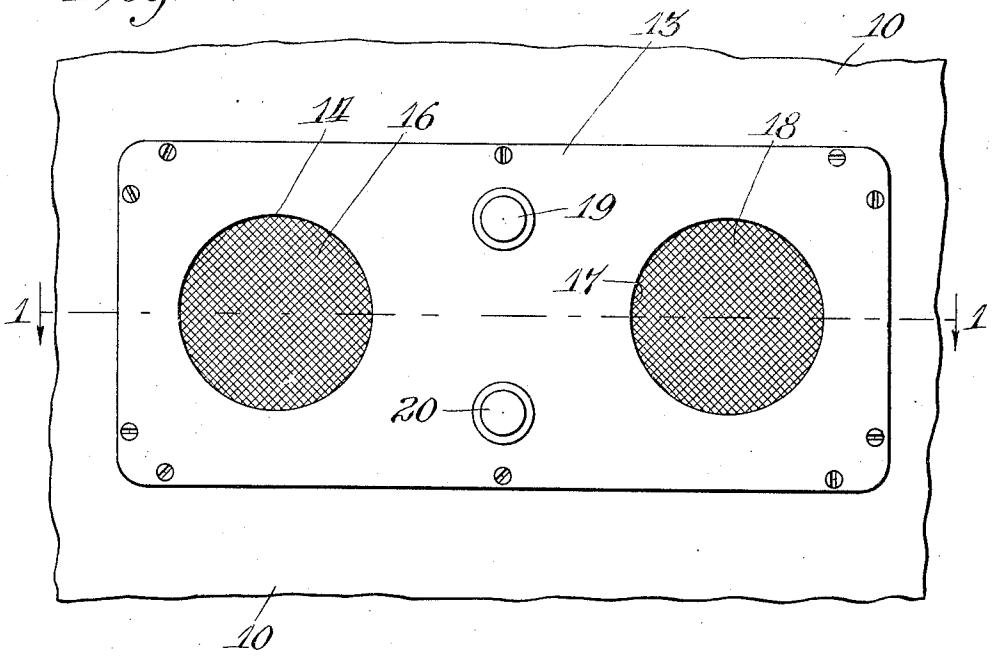

Inventor.
LeRoy C. Baumann,
By Paul O. Pippel
Atty.

Patented Dec. 31, 1929 1,741,274

UNITED STATES PATENT OFFICE

LE ROY C. BAUMANN, OF CHICAGO, ILLINOIS

RADIO REPRODUCER

Application filed March 6, 1929. Serial No. 344,718.

My invention relates to a radio reproducer.

In hotels an effort is being made to provide radio music in the individual guest rooms by locating loud speaker units in the rooms. It has been found that the conventional cone or other speaker used for this purpose is accidentally bumped around and easily damaged or otherwise put out of order.

Therefore, this invention more particularly relates to an improved loud speaker unit which may be conveniently located in an inexposed place in a hotel room to prevent its demoltion.

Accordingly, the primary object of the invention is to provide an improved speaker unit built into an opening in the room wall, where it will at all times be in a safe, out of the way place.

Other objects, and problems solved incident to this innovation in speakers, will be hereafter apparent.

Briefly, these objects are accomplished by providing a pocket in the room wall to be closed by a panel that is provided with an opening at one end to mount the speaker, and at its other end, with another opening to provide a means of escape for the speaker back waves.

In the accompanying sheet of drawings illustrating a practicable form of the invention:

Figure 1, is a horizontal cross sectional view of the arrangement in a wall, taken along the section line 1—1 seen in Figure 2, looking in the direction of the arrows; and,

Figure 2, is a front elevational view.

For purposes of illustration a wall is shown at 10 which in any convenient place is hollowed out to form a pocket 11. This pocket receives a sound box 12 closed at its front or wall side with a detachably mounted closure panel 13, as clearly shown.

One end of the panel 13 has formed therein an opening 14 in which is mounted a cone type speaker unit 15. An ornamental screen 16 may close this opening. Cone speakers create front waves and also back waves. The pocket space rearwardly of the speaker provides an outlet for the back waves, which escape at the other end of the panel through the back wave outlet or opening 17 provided for that purpose. A similar screen 18 to that heretofore described, may also here be provided. The screens, of course, also exclude dirt from the wall pocket and the speaker unit.

The openings 14 and 17 are arranged as far apart as possible to isolate the front and back speaker sound waves. If these two waves were to clash they might tend to cancel each other and alter the sound of the music or other radio program in an objectionable manner.

A tuning dial is generally indicated at 19; a volume control at 20, all carried on the closure panel.

From this detailed description the use of the arrangement will be clear; and, it will also be seen that the objects of the invention, heretofore recited, are achieved thereby.

It is the intention to cover all such changes and modifications of the illustrative embodiment of my invention which do not depart from the spirit and scope thereof, as is indicated in the subjoined claims.

What I claim is:

1. In combination with a wall hollowed out to form a pocket, a panel closing the pocket and having an opening therein, and a radio loud speaker carried in the opening.

2. In combination with a wall hollowed out to form a pocket, a panel closing the pocket and having an opening therein, and a cone type speaker unit in the opening, there being another opening in the panel to serve as an escape for the speaker back waves.

3. The combination with a wall having a pocket therein, of a panel for closing the front side of the pocket, and a radio loud speaker carried by the panel.

4. The combination with a wall having a pocket therein, of a panel for closing the front side of the pocket, said panel having therein a pair of widely spaced openings communicating with the pocket, and a cone speaker mounted in one of said openings.

5. The combination with a wall having a pocket therein, of a panel for closing the front side of the pocket, said panel having therein a pair of widely spaced openings communicating with the pocket, a cone speaker arranged in one of the openings, and screens closing the openings.

Chicago, Illinois, February 23rd, 1929.

LE ROY C. BAUMANN.