(No Model.) 2 Sheets—Sheet 1.

E. V. BATES.

CARD FEEDING MACHINE.

No. 456,212. Patented July 21, 1891.

Fig. 1.

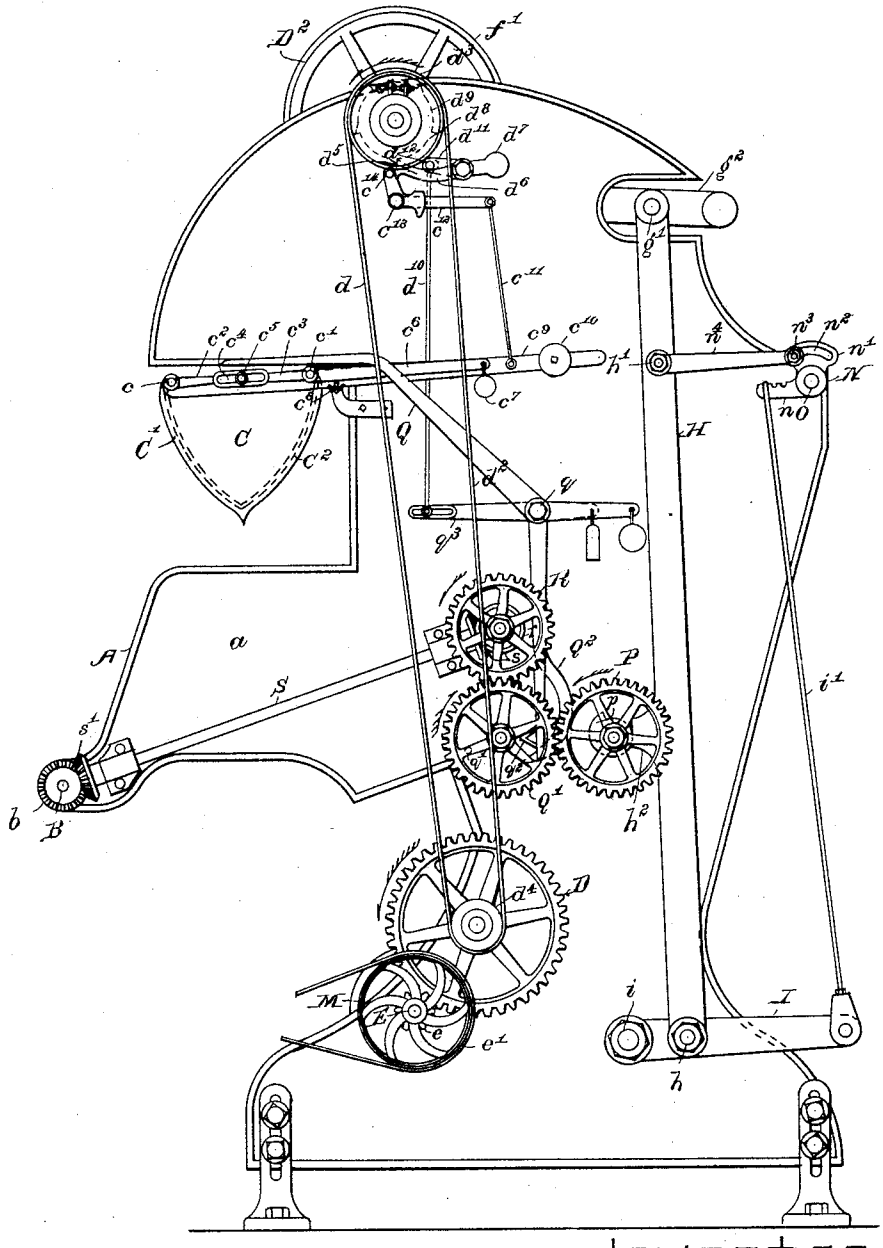

Witnesses—
Kirkley Hyde.
Mystic C. Beals.

Inventor—
Edde V. Bates,
By Albert M. Moore,
His Attorney.

THE NORRIS PETERS CO., PHOTO-LITHO., WASHINGTON, D. C.

(No Model.) 2 Sheets—Sheet 2.

E. V. BATES.

CARD FEEDING MACHINE.

No. 456,212. Patented July 21, 1891.

Fig. 2.

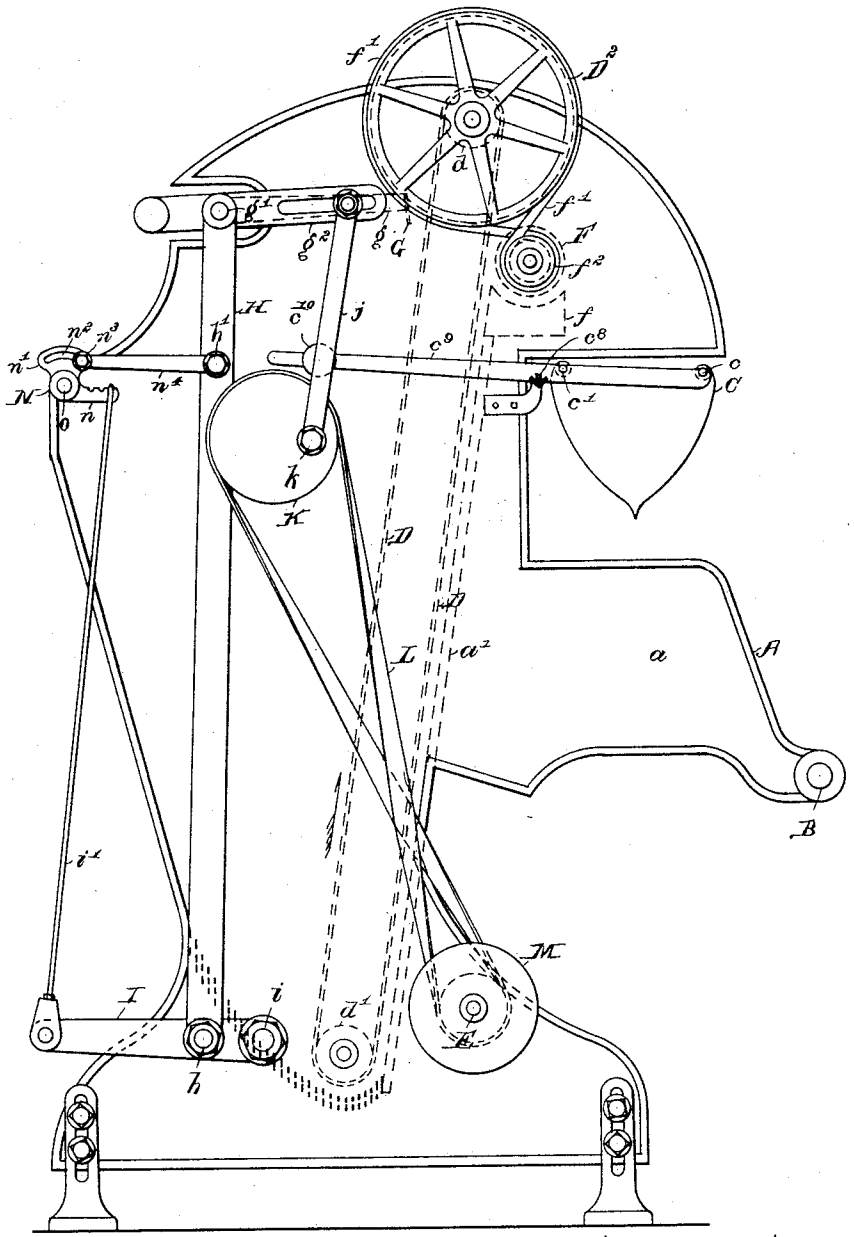

Witnesses—
Kirkley Hyde.
Mystic C. Beals.

Inventor—
Edde V. Bates,
By Albert M. Moore,
His Attorney.

THE NORRIS PETERS CO., PHOTO-LITHO., WASHINGTON, D. C.

UNITED STATES PATENT OFFICE.

EDDO V. BATES, OF DRACUT, ASSIGNOR OF ONE-HALF TO ROBERT H. HART, OF LOWELL, MASSACHUSETTS.

CARD-FEEDING MACHINE.

SPECIFICATION forming part of Letters Patent No. 456,212, dated July 21, 1891.

Application filed January 5, 1891. Serial No. 376,800. (No model.)

To all whom it may concern:

Be it known that I, EDDO V. BATES, a citizen of the United States, residing at Dracut, in the county of Middlesex and Commonwealth of Massachusetts, have invented a certain new and useful Improvement in Card-Feeding Machines, of which the following is a specification.

My invention relates to card-feeding machines or that class of machines which automatically weigh a given quantity of stock and then distribute such weighed quantity uniformly over a given amount of surface of the feed-apron of a carding-engine, the object of my improvement being to feed a uniform quantity of stock, whether the supply of stock in the feeding-machine is large or small.

The improvement hereinafter described is applicable to the so-called "Bramwell Weighing and Feeding Machine" shown and described in United States Patent No. 216,373, granted June 10, 1879, to Bramwell.

In the accompanying drawings, Figure 1 is a left-side elevation, and Fig. 2 a right-side elevation, of so much of a Bramwell weighing and feeding machine as is necessary for the understanding of my improvement, showing, also, said improvement.

The frame A, apron sides *a*, rear apron-roll B of the feed-apron (not shown) of a carding-engine, the scale-pan C, the spike-apron D, running upon upper and lower apron-rolls *d d'*, the upper spike-apron roll *d* being driven by a belt d^2, which connects a pulley d^3 on the shaft of the last-named roll with another pulley d^4, fast on the hub of the gear D', said gear D' engaging a pinion *e*, fast on the driving-shaft E, and the driving-pulley *e'*, fast on said shaft E, are all of the usual construction and operation as said machine is now commonly constructed and used.

The scale-pan C has a front C' and back C^2, (shown by dotted lines,) pivoted at *c c'*, said front and back being each provided at one side of the machine with arms $c^2 c^3$, rigidly secured thereto, one of said arms being provided at its free end with a slot c^4 and the other with a laterally-projecting stud c^5, which reaches through said slot, so that a movement of either the front or back in one direction will cause an equal movement of the other of said parts in the other direction, the front of said scale-pan being provided with a forwardly-reaching arm c^6, carrying a weight c^7, which tends to keep the lower edges of said front and back in contact with each other and to keep said pan closed. The scale-pan is provided at each side with forwardly-extending arms c^9, rigidly secured thereto, each of said arms being provided with a knife-edge c^8 and carrying an adjustable weight c^{10} to more than balance the pan, except when said pan is supplied with the required amount of stock. When the scale-pan is filled, it falls and the arms or scale-levers c^9 are raised. The scale-lever c^9 at one side of the machine is connected by a link c^{11} to the front end of a bent releasing-lever c^{12}, pivoted at c^{13} on the side of the frame A, and provided at its upper rear end with a laterally-projecting pin c^{14}, which normally extends over the rear arm d^5 of a catch-lever d^6, pivoted on said frame and having a weighted front arm d^7, and prevents said catch-lever from engaging projections d^8 on the pulley d^9 and stopping the rotation of said last-named pulley, which is fast on the shaft of the upper spike-apron roll *d* and forms with the pulley d^3 (the latter being loose on said shaft) a friction-clutch.

The scale-pan is opened at regular intervals by the following means: A bent lever Q is pivoted at *q* on a stud, which projects horizontally from the frame A, the upper arm of said lever being extended backward over the stud c^5 above mentioned, so that when said upper arm of said lever Q is depressed and bears upon said stud c^5 the front and back of the scale-pan are swung away from each other and discharge the contents of the pan upon the feed-apron of the carding-engine. The lower nearly vertical arm of the lever Q is moved forward once in every revolution of the gear Q', said gear having a laterally-projecting pin *q'*, which strikes upon and forces forward a V-shaped cam-piece q^2, secured to said lower arm of said lever Q, thereby causing the upper arm of said lever to be depressed. The gear Q' engages a gear R, which has secured to it concentrically therewith a bevel-gear *r*, which engages a bevel-gear *s*, fast on the inclined shaft S, said shaft S being driven from the rear apron-roll B of

the feed-apron of the carding-engine, said roll B having a uniform rotation and having secured to its shaft a bevel-gear b, which engages another bevel-gear s', fast on said inclined shaft S at the lower front end of the same. The scale-pan when the pin q' has passed the part q^2 of the lever Q is closed by the gravity of the arm c^6 and weight c^7, and immediately thereafter said pin q' strikes and throws forward the curved lower arm of a three-armed lever Q^2, pivoted on the pin q, throwing its front arm q^3 downward, and by means of the link d^{10} connecting said arm q^3 to an arm d^{11}, which turns loosely on the pivot of the catch-lever d^6, and has a pin d^{12}, which projects over the rear arm d^5 of said catch-lever, drawing said catch-lever out of engagement with the pulley d^9.

The spike-apron D is an endless apron covered with wooden slats in which are inserted short spikes or pins, which point in the direction in which they travel and lie very close to the slats, projecting only enough to catch in the stock and carry a considerable quantity of it to the top of the spike-apron D, the direction in which the apron travels being indicated by an arrow. The stock is placed in a receptacle or supply-box formed by the front and sides of the machine and by the partition a', in which at the rear of the same the spike-apron runs. The wool or stock which is lifted by the spike-apron, with the exception hereinafter stated, is carried up over the upper spike-apron roll d, and is then removed from the spike-apron by a stripper having a greater surface speed than said spike-apron, which stripper may be either a roll F or an apron, the lower apron-roll of which is arranged in the position occupied by the roll F in Fig. 2, the adjacent surfaces of the spike-apron and stripper F running in the same direction, and said stripper drawing the stock off from the spikes of the spike-apron into and through a trough f, arranged immediately below said stripper and causing said stock to drop into the scale-pan. As soon as the proper weight of stock is deposited in the scale-pan said pan settles, raising the front end of the levers c^9 c^{12}, releasing the catch-lever d^6, and allowing the latter to engage the pulley d^9 and stop the spike-apron in the usual manner. The stripper or roll F is driven substantially in the usual manner directly from the upper roll d of the spike-apron by means of a pulley D^2, fast on the shaft of said roll d, and a crossed belt f', connecting said last-named pulley, and a smaller pulley f^2, fast on the shaft of the roll F, so that when the spike-apron stops the stripper-roll F stops and no stock is delivered to the scale-pan after the proper weight of stock is placed in said pan.

The spike-apron is not allowed to raise stock from the supply-box to its fullest capacity at all times, because if this were so the stock would be fed much faster from a full than from a partially-full supply-box. Therefore a comb G is commonly arranged to oscillate slowly in a long arc of a circle near the rising side of the spike-apron, and removes the surplus wool therefrom and causes it to fall back into the supply-box, said comb being supported on arms g, which project from the rock-shaft or comb-shaft g', journaled in nearly vertical parallel levers H, arranged one at each side of the machine, and having their fulcrums h on other nearly horizontal parallel levers I, pivoted at their rear ends at i on the frame A. The comb G is oscillated by means of an arm g^2, secured to said comb-shaft g', and connected by a pitman j to the wrist-pin k of the crank-wheel K, said crank-wheel being driven by a crossed belt L, which connects it to a pulley M, fast on the driving-shaft E, the comb and its above-described supporting and operating parts being of the usual construction.

The front or free end of each lever I, as usual, is connected by a rod i' to a nearly horizontal arm n of a bell-crank lever N, fast on a rock-shaft O, journaled in the frame of the machine at the front thereof, the other upper arm n' of said lever N having concentric with said shaft O an arc-shaped slot n^2, in which a bolt n^3 is adjustable, said bolt serving as a pivot for the front end of the connecting-rod n^4, the other end of which is pivoted at h' to the lever H, so that turning said shaft will vary the distance of the arc described by the comb G from the spike-apron D. Heretofore the nearly horizontal arm n of the bell-crank lever N has been pointed forward or in the opposite direction from that shown, so that the weight of the levers H I and of the comb-shaft g' and the parts supported thereby have had a tendency to draw the comb forward or away from the apron. This tendency has been counteracted by the pressure of the stock in the supply-box upon long fingers reaching about two-thirds of the way down into the supply-box, at the front of the same, from the rock-shaft O, so that as the supply-box was gradually emptied and the pressure on the fingers lessened the comb would be drawn farther away from the spike-apron, in order that a larger proportion of the stock engaged by the spike-apron might be retained thereby and carried past the comb G to the stripper F, the absolute amount of the stock so engaged being smaller the lower the stock stands in the supply-box, because the greater the distance through which the spike-apron runs in contact with the stock in the supply-box the more opportunities the spikes of said apron have to engage the stock, which is in the form of locks or bunches of fiber of varying sizes and shapes. Practically, however, it has been found impossible by the means above mentioned to secure a uniform supply to said stripper, and as the supply in the supply-box grew lower it has been necessary to move the upper end of the rod i' farther outward to increase the leverage on the bell-crank N and draw the comb farther from the

spike-apron, and it has also been necessary to keep the supply-box filled for a considerable distance above the lower end of the fingers of the rock-shaft O.

I dispense with the fingers on the shaft O, and turn the nearly horizontal arm *n* backward or toward the spike-apron, so that the weight of the levers H I, the weight of the comb-shaft *g'*, and the weight of the rod *i'* will tend to bring the comb G nearer to the spike-apron, and I provide one of the levers H with a suitable surface, which in Fig. 1 is represented as a backward projection h^2, to receive the pressure of a cam *p*, rigidly secured to a gear P, the latter engaging with and being driven by the gear Q', above named. The gears P Q' have an equal number of teeth, and each makes a complete revolution between two successive closings of the scale-pan, and the cam *p* is of such a shape, as shown in Fig. 1, as to move the comb very gradually away from the spike-apron during the entire revolution of said cam and then to allow said comb suddenly to assume its nearest position to said spike-apron, and said cam is so arranged as to permit the comb to be nearest the spike-apron when the scale-pan closes and the spike-apron begins to move. The spike-apron, although set in motion at regular intervals upon the closing of the scale-pan, runs only until said scale-pan is filled, and the time during which said spike-apron runs continuously varies from about one-eighth of the interval during which the scale-pan remains closed, when the supply-box is substantially full, to about three-fourths of said interval, when said supply-box is nearly empty. The comb G is therefore in my improved construction most efficient when the spike-apron starts, without regard to the amount of stock in the supply-box, and, continually receding, would allow the spike-apron in each run to carry past the comb a constantly-increasing amount of stock, and as the stock in the supply-box runs lower and makes it necessary that the spike-apron should run longer to fill the scale-pan the comb removes from the spike-apron a smaller proportion of the stock engaged by said spike-apron, and thus tends to equalize the feed.

By means of the improvement above described the full weight of stock is supplied to the scale-pan in every case until the supply-box is nearly empty, the roving from the carding-engine is of more uniform weight, and the supply-box requires less frequent filling, thereby effecting a great saving of labor in large mills.

In the arrangement commonly heretofore used the short stock is knocked off from the spike-apron by the comb to a much greater extent than the long stock, which adheres better to the spikes of said spike-apron, so that when the supply-box is full a larger proportion of the long stock is fed to the carding-engine, and when the supply-box is partially emptied the short stock unduly preponderates, and so that the resulting sliver and yarn are not of uniform size and strength, the long fibers adding to the size and strength of the yarn.

I claim as my invention—

1. The combination of the spike-apron having an intermittent motion, the oscillating comb having a center of oscillation movable toward and away from said spike-apron, and means, substantially as described, of moving said center away from said apron while said apron is moving and of moving said center toward said apron while said apron is at rest, as and for the purpose specified.

2. The combination of the scale-pan and weighing devices, the supply-box, a spike-apron traveling in said supply-box and adapted to raise stock therefrom, a stripper arranged to remove stock from said spike-apron and to discharge the same into said scale-pan, means of stopping said spike-apron upon placing the proper weight of stock in said scale-pan, the oscillating comb having a center of oscillation movable toward and away from said spike-apron, and means, substantially as described, of moving said center away from said apron while said apron is moving and of moving said center toward said apron while said apron is at rest, as and for the purpose specified.

3. The combination of the scale-pan and weighing devices, the supply-box, a spike-apron traveling in said supply-box and adapted to raise stock therefrom, a stripper arranged to remove stock from said spike-apron and to discharge the same into said scale-pan, means of stopping said spike-apron upon placing the proper weight of stock in said scale-pan, the oscillating comb, parallel levers turning upon the same fulcrum or center and supporting the journals of said oscillating comb and rigidly connected to each other, a cam arranged to move one of said levers forward and to move the center of oscillation of said comb away from said spike-apron, and weighted levers to move said center of oscillation toward said spike-apron, as and for the purpose specified.

In witness whereof I have signed this specification, in the presence of two attesting witnesses, this 17th day of December, A. D. 1890.

EDDO V. BATES.

Witnesses
ALBERT M. MOORE,
ROBERT H. HART.