350-315 CROSS REFERENCE SEARCH ROOM
75/73

Oct. 25, 1955 F. S. SIOK 2,721,507
CONTRAST FILTER SELECTING MEANS FOR PHOTOGRAPHIC PRINTING APPARATUS
Filed Oct. 18, 1954 2 Sheets-Sheet 1

X2656

FIG. 1

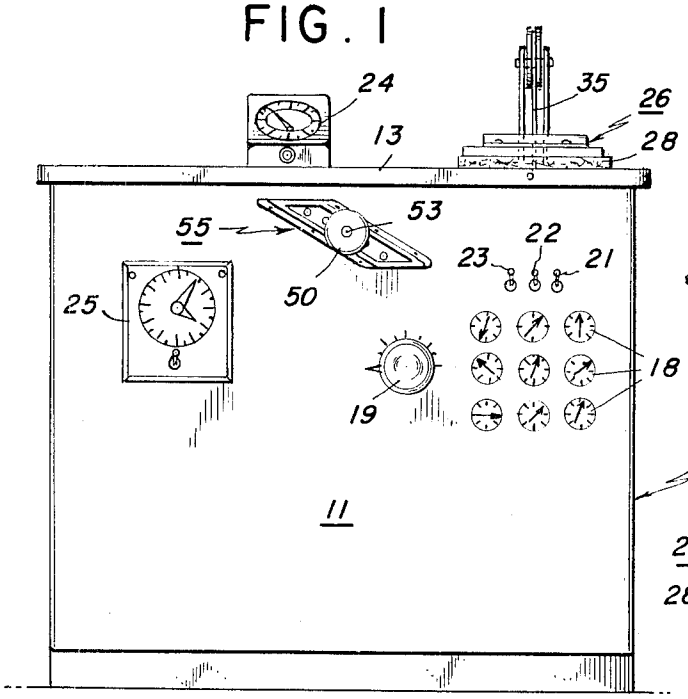

FIG. 6

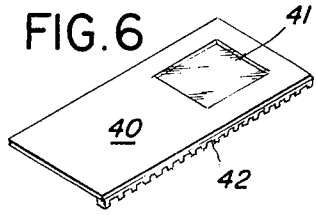

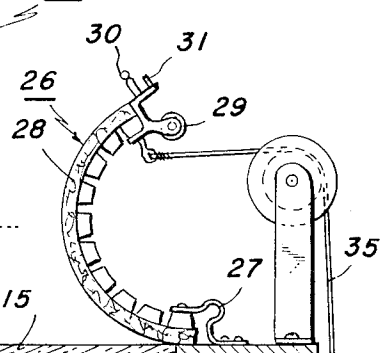

FIG. 2

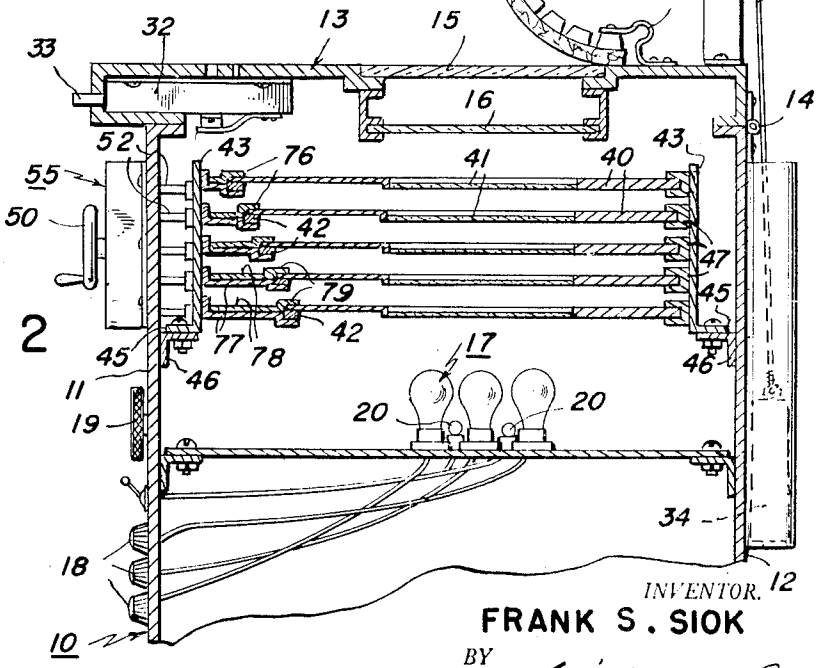

INVENTOR.
FRANK S. SIOK
BY
ATTORNEYS

Oct. 25, 1955 F. S. SIOK 2,721,507

CONTRAST FILTER SELECTING MEANS FOR PHOTOGRAPHIC PRINTING APPARATUS

Filed Oct. 18, 1954 2 Sheets-Sheet 2

FIG. 3

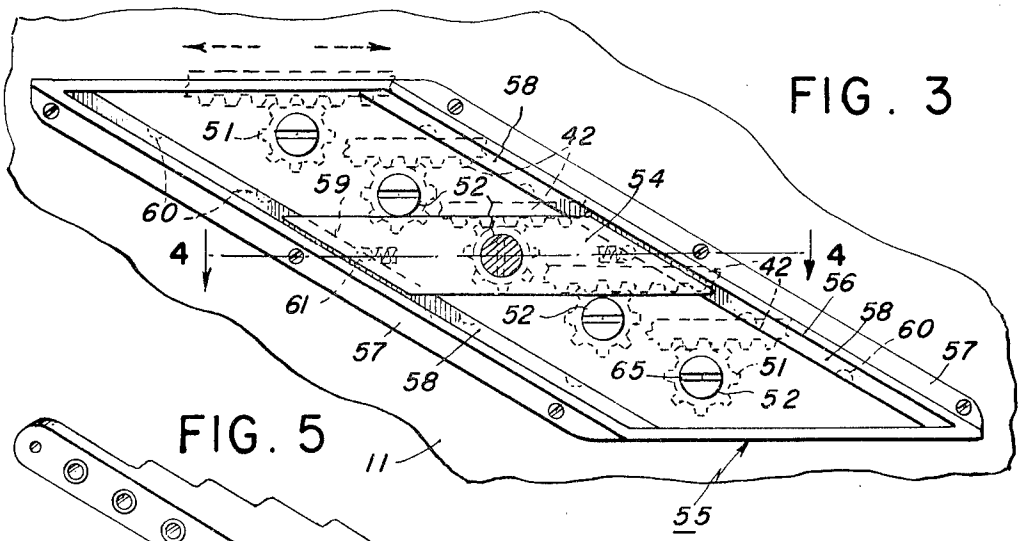

FIG. 5

FIG. 4

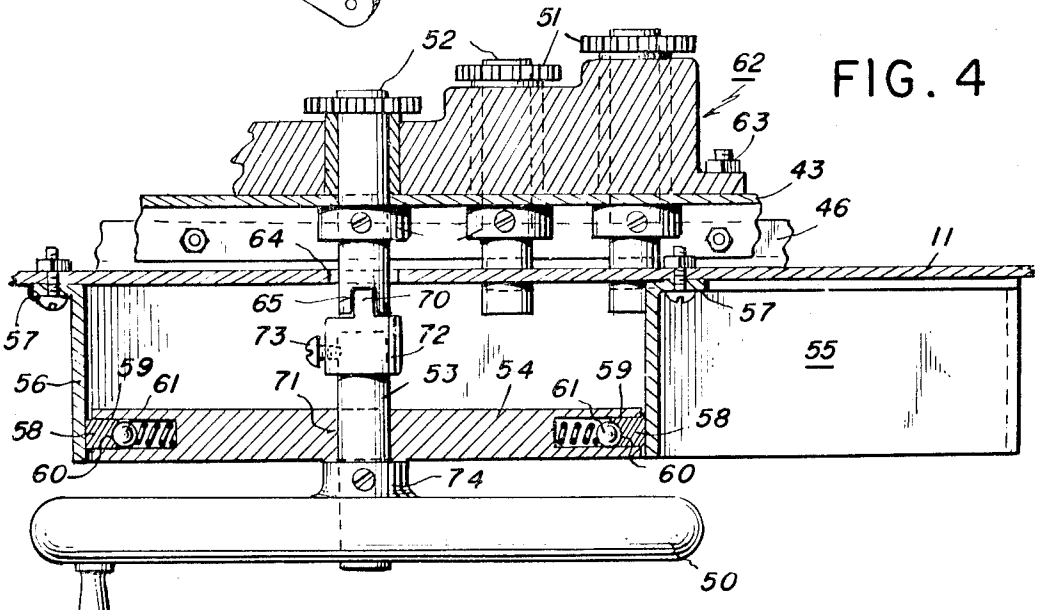

FIG. 7

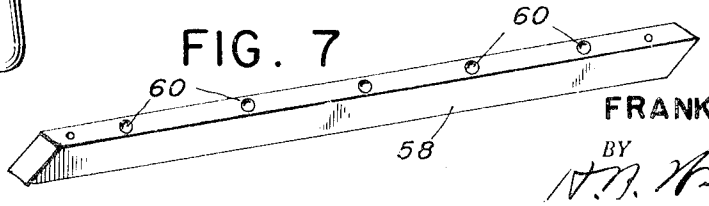

INVENTOR.
FRANK S. SIOK
BY
ATTORNEYS

United States Patent Office 2,721,507 Patented Oct. 25, 1955

2,721,507

CONTRAST FILTER SELECTING MEANS FOR PHOTOGRAPHIC PRINTING APPARATUS

Frank S. Siok, Chicago, Ill.

Application October 18, 1954, Serial No. 462,797

6 Claims. (Cl. 95—73)

This invention relates to photographic printing apparatus particularly of the type which prints negatives of various densities by the use of variable contrast filters to obtain prints that are satisfactory in both highlights and shadows without the necessity of using different kinds and grades of sensitized papers.

In photographic printing apparatus of this general character a plurality of filters of different colors or screens to diffuse, subdue or modify the light are selectively movable into and out of the path of light from the light source to the negative; and the primary object of the invention is to provide improved means for manually moving the filters or screens.

Another object of the invention is to provide in an apparatus of the above indicated character a plurality of superimposed slides which carry the variable contrast filters and which are moved by rack and pinion mechanisms, any one of which may be actuated by a single manually rotatable operating element.

Another object is to mount the rotary operating element or handle on a slide so that it may be shifted to a position for coaction with any one of the rack and pinion mechanisms and then moved into driving connection with the selected filter actuating mechanism.

Another object is to provide a selective filter actuating means which is simple in construction, easy to manipulate and reliable in operation.

With the above and other objects and advantages in view, the invention resides in the novel combinations and arrangements of parts and the novel features of construction hereinafter described and claimed, and illustrated in the accompanying drawings which show the present preferred embodiment of the invention.

In the drawing:

Fig. 1 is a front elevation on a very reduced scale of a photographic printing apparatus in which the invention is incorporated;

Fig. 2 is a detail front-to-rear vertical section, on a slightly enlarged scale, through the upper portion of the printer shown in Fig. 1, the parts being somewhat diagrammatically illustrated;

Fig. 3 is an enlarged detail elevation of a portion of the front of the printer to show the selective filter actuating means, the handle of the manually actuated shaft being omitted, that shaft being shown in section and portions of the rack and pinion actuating mechanisms for the filters being shown in dotted lines;

Fig. 4 is a further enlarged detail horizontal section taken substantially on the line 4—4 in Fig. 3;

Fig. 5 is a perspective view of the bearing for the pinion shafts;

Fig. 6 is a perspective view of one of the rack-carried filter slides;

Fig. 7 is a perspective view of one of the track or guide bars for the handle-carried slide.

Referring more in detail to the drawings, the numeral **10** denotes the body or outer casing of the printer. It is of rectangular shape to be supported on the

floor and includes a front wall **11**, a rear wall **12** and a top **13** which is preferably hinged at **14** to the rear wall. Near one end of the top is an opening in which a clear glass plate **15** is set to support the negative and the sensitized paper. If desired a ground glass plate **16** may be slidably and removably supported in suitable guides directly beneath the plate **15**. In the lower part of the casing or cabinet **10** vertically beneath the plate **15** is a light source **17**. The latter may be a bank of dodging lamps controlled by a plurality of individual rheostats **18** and a main rheostat **19** all mounted on the front wall **11**, as will be seen on reference to Figs. 1 and 2. The light source may also include safety and work lights **20**. These lamps **20** may be controlled by a light switch **21**, a viewing light switch **22** and a work light switch **23**, all mounted on the front wall above the bank of dodging rheostats. A volt meter **24** is mounted on the rear of the top **13** and on the other or left end of the front of the casing is an automatic timer **25** with a control switch. The negative and sensitized paper are pressed against the plate **15** by a flexible platen **26** which may be hinged to the top at **27** and may comprise resilient strips connected by spaced bars and carrying a sponge rubber pad **28**. Across the free end of the platen is a rigid member carrying a handle **29**, a latch pin **30** and light switch pin **31**. These pins enter openings in the top **13** and coact a push type light switch **32** mounted beneath the cover at its front and having a push pin **33** for locking and releasing the platen pin **30**. When the platen is released it is moved to its elevated position shown in Fig. 2 by a weight **34** connected by a cord **35** to the free end of the platen.

Mounted within the body or casing **10** are a plurality of horizontal slides **40** each of which carries a filter or screen **41**, the slides being individually shiftable longitudinally of the casing to bring the filters into and out of vertical registration with the light source **17** and the clear glass plate **15**. Each slide **40** may be a rectangular sheet of metal or other substantially rigid material, having an opening in or over which is suitably fastened the filter or screen. Along the front of each slide on its bottom is a longitudinal rack bar **42**. The slides are supported in suitable guides on upright front and rear longitudinally extending frame plates **43** spaced from the front and back walls **11** and **12**, the lower edges of the plates **43** having flanges **45** bolted or otherwise removably secured to horizontal angle metal strips **46** fastened to the casing walls, as seen in Fig. 2. The rear edges of the slides **40** move in grooved or channeled guides **47** suitably mounted on the rear frame plate; and if desired similar grooved guides or supports may be mounted on the end walls of the casing to receive the end edges of the slides **40** when they are in either of their extreme positions. The guides for the front edges of the slides are different, as hereinafter described, since those front edges carry the rack bars **42**.

The filter slides **40** are selectively operated by a single rotatable operating member **50** which is shiftable to coact with any one of the rack and pinion actuating mechanisms which move the slides. Each of these mechanisms includes one of the rack bars **42** and a coacting pinion **51** on a shaft **52**. The actuator **50** may be a crank handle or hand knob on the outer end of a main shaft **53** mounted for rotation in a slide **54** which may be shifted to axially aline the shaft **53** with any of the pinion shafts **52**. As seen in Fig. 3, the several pinion shafts **52** are not only in different horizontal planes but are horizontally offset so that the slide **54** must be shifted along an inclined plane which passes through the axes of the several shafts **52**, in order to aline the operating or driving shaft **53** with any one of the pinion shafts. The selector slide **54** has the shape of a parallelogram the long sides of which are

horizontal and is mounted in a similar shaped housing **55** the short sides of which are horizontal. The long sides **56** of the housing or casing **55** have outwardly projecting flanges **57** secured by fastenings to the outer side of the front **11** of the cabinet, and on the opposed inner faces of these sides are removably fastened by screw or the like opposed track bars **58** to be received in grooves or channels **59** formed in the short sides of the selector slide or bar **54**. The opposed inner edges of these track or guide bars **58** are formed with seats or sockets **60** adapted to receive spring pressed ball detents **61** set in the channels **59** as seen in Fig. 4. The seats **60** are so located that when the ball detents **61** snap into two opposed seats in the bars **58** the hand or crank shaft **53** will be axially alined with one of the pinion shafts.

The several shafts **52** are rotatable in bushed openings in a bearing bracket **62** removably fastened by screws or bolts **63** to the inner face of the front frame plate **43**. This bearing bracket is of stepped formation, as seen in Figs. 4 and 5 and the several pinion shafts vary in length but their front ends project through openings **64** in the cabinet front **11** to the same extent. A suitable disengageable clutch connection is provided between the actuating hand shaft **53** and the front ends of the pinion shafts. Such connection may be made by forming these ends of the shafts **52** with diametrically extending slots **65** adapted to receive a diametrically disposed clutch member **70** carried by the inner end of the shaft **53**. The latter is mounted for both rotary and longitudinal sliding movements in an opening **71** in the selector bar or slide **54**. As shown in Fig. 4, the male clutch member **70** may be carried by a socket member or collar **72** fastened by a set screw **73** on the inner end of shaft **53**, and the outer end of the collar or hub **72** may be so located that it will engage the inner face of the selector slide to limit the outward sliding movement of the shaft **53**. The inward movement of that shaft may be stopped by a hub **74** on the handle or crank member **50** which is removably secured to the shaft by a suitable fastening. The pinion shafts **52** are held against longitudinal movement in the bushings of the bracket **62** by the pinions **51** on their inner ends and by stop collars secured by set screws to the shafts and disposed against the front face of the plate **43** as seen in Fig. 4.

On opposite sides of the pinion shaft bearing bracket **62**, the forward edges of the filter slides are supported by grooved or channeled guides **76** fastened to the rear face of the inner frame plate **43**, as will be understood upon reference to Fig. 2. These supports and guides may be formed by lower plates **77** and upper plates **78** between the rear portions of which are channels **79** of a size to receive both the slide and its rack bar **42**. Since the several pinions are horizontally off-set, the filter slides vary in width, as seen in Fig. 2, and the guide channels **79** of the several guides or supports **76** are progressively further from the plate **43**. As above noted there is a set of these guides **76** on the plate **43** beyond each end of the bearing bracket **62**. For the sake of clearness Fig. 2 shows all of the filter slides **40** superimposed at the right hand end of the cabinet but such is not the normal location of these slides. They are normally in retracted positions at the left hand end of the cabinet. In use one or more of the filter slides will be shifted to the operative position shown in Fig. 2 by the above described operating means.

It is believed the operation of the filter or screen selecting means will be apparent from the above detailed description of the present preferred way of practicing the invention. If desired spring means may be provided for normally holding the shaft **53** in its forward position with the clutch elements **65**, **70** disengaged. When the clutch is disengaged, the handle **50** may be grasped and moved to shift the selector slide in the housing **55** to a position to move any one of the filter slides **40** and the coaction of the balls **61** with the seats **60** will cause the shaft **53** to be alined with one of the pinion shafts **52**. The handle is then moved inwardly or rearwardly to cause the clutch elements to engage and it is then rotated in the proper direction to shift the filter slide longitudinally in the cabinet to either its operative position or its retracted position.

From the foregoing, taken in connection with the accompanying drawing, it will be seen that novel and advantageous provision has been made for carrying out the objects of the invention, and while preferences have been disclosed, attention is invited to the possibility of making variations within the scope of the invention as claimed.

I claim:

1. In a photographic printer, a casing having a support for a negative and an opposed light source, a plurality of slides carrying filters or screens movable into and out of the path of the light, individual actuating means for each of said slides including a rotary shaft, the shafts of the several actuating means having their axes laterally spaced in a single plane, a selector slide carried by the casing and movable along said plane, a manually actuated operating shaft mounted on said selector slide and having rotary and sliding movements and being movable into positions for operative relation with any one of said rotary shafts by the sliding movement of said selector slide, a clutch element on each of said rotary shafts, a coacting clutch element on said operating shaft movable into driving engagement with the clutch element on any one of said rotary shafts by the sliding movement of said operating shaft together with a housing on said casing in which said selector slide is movable, tracks in said housing on which the selector slide moves, and spring pressed detents on said selector slide to coact with spaced seats on said tracks to hold said selector slide in an adjusted position in which the operating shaft is in alinement with one of said rotary shafts of the several filter slide actuating means.

2. In a photographic printer, a casing having a support for a negative and an opposed light source, a plurality of slides carrying filters or screens movable into and out of the path of the light, individual actuating means for each of said slides including a rotary shaft, the shafts of the several actuating means having their axes laterally spaced in a single plane, a selector slide carried by the casing and movable along said plane, a manually actuated operating element mounted on said selector slide and having rotary and sliding movements and being movable into positions for operative relation with any one of said rotary shafts by the sliding movement of said selector slide, coacting driving members on said operating element and on said rotary shafts and movable into driving engagement by the sliding movement of said operating element, said individual actuating means for each of said filter slides including a rack carried by the slide and a pinion meshing with the rack bar and fixed to the rotary shaft of that actuating means, said operating means being a shaft, said coacting driving members comprising a clutch element on the operating shaft and a coacting clutch element on each of said rotary shafts of the several filter slide actuating means, a housing on the casing in which said selector slide moves, tracks in said housing on which said selector slide is movable, and spring pressed detents on said selector slide to coact with spaced seats on said tracks to hold said selector slide in adjusted positions in any of which the operating shaft is in alinement with one of said rotary shafts of the several filter slide actuating means.

3. In a photographic printer, an elongated casing including front and rear walls and a top, a support for a negative in said top near one of its ends, a light source in said casing and spaced beneath said negative support, a plurality of substantially rectangular vertically spaced slides mounted in said casing for movement lengthwise thereof and each carrying a filter or screen movable into and out of registration with said light source and said negative support, means supported from the rear wall

for guiding the rear edges of said slides, rack bars on said slides extending along their front edges, an upright frame plate in said casing supported from said front wall in spaced relation thereto and extending lengthwise of the casing, bearing means on an intermediate portion of frame plate, a plurality of shafts rotatably mounted on said bearing means and extending through said plate and through the front wall of the casing, a pinion on each of said shafts in mesh with one of said rack bars, means carried by said frame plate on each side of said bearing means to guide the front edges of said slides, means carried by said frame plate on each side of said bearing means to guide the front edges of said slides, means carried by the front wall of said casing for selectively engaging and actuating said pinion shafts, said last mentioned means comprising a housing on the exterior of the front wall of the casing, a selector slide movable in said housing, a manually actuated operator shaft mounted in said selector slide for rotary and sliding movements, and movable into alinement with any of said pinion shafts by the shifting of the selector slide, and coacting clutch elements, one on said operator shaft and one on each of said pinion shafts, the coacting clutch elements being movable into driving engagement by the sliding movement of said operator shaft.

4. The structure of claim 3 together with means for holding said selector slide in adjusted positions, in any of which positions said operator shaft is alined with one of said pinion shafts.

5. In a photographic printer, a plurality of parallel slides each having a filter or screen movable transversely

of the path of light from the light source to the negative, a casing having a front wall, means in said casing mounting said slides in spaced horizontal superimposed relation, a separate rack and pinion mechanism for moving each of said slides, each mechanism including a rack on one of the slides and a meshing pinion on a rotary shaft, the rotary shafts of said mechanisms being disposed at said front wall and equally spaced both horizontally and vertically, whereby the axes of said shafts are disposed in an inclined plane, a selector slide carrying a manually actuated operator shaft mounted for both rotary and endwise sliding movements, a housing for said selector slide mounted at said front wall and having means guiding said slide in the inclined plane of the axes of said rotary shafts, whereby said operator shaft may be moved into axial alinement with any of said rotary shafts, and coacting clutch elements, one on said operator shaft and one on each of said rotary shafts, the coacting clutch elements being movable into driving engagement by the sliding movement of said operator shaft.

6. The structure of claim 5 together with means holding said selector slide in different adjusted positions, in any of which positions said operator shaft is alined with one of said rotary shafts.

References Cited in the file of this patent

UNITED STATES PATENTS

2,300,970	Riess	Nov. 3, 1942
2,511,646	Marmour	June 13, 1950
2,557,182	Forgett	June 19, 1951