C. A. STECKERT & E. W. O'BRIEN.

LOCOMOTIVE FRAME PEDESTAL BRACE.

APPLICATION FILED MAR. 5, 1913.

1,068,944. Patented July 29, 1913.

-FIG. 1.-

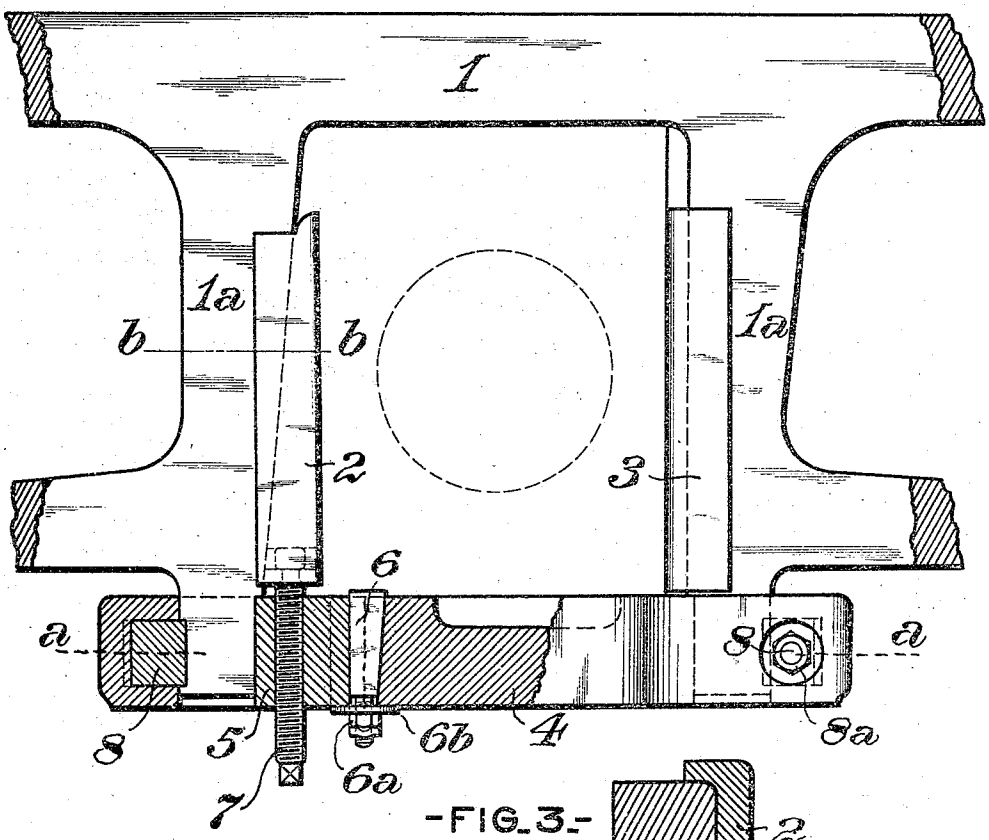

-FIG. 3.-

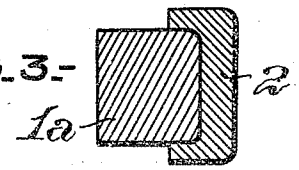

-FIG. 2.-

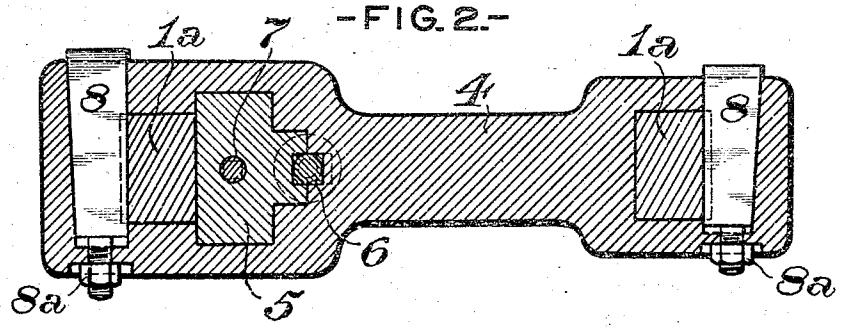

WITNESSES

Edward A. Wright.

S. R. Bell.

INVENTORS

Christopher A. Steckert,

Ernest W. O'Brien

by Howson & Howson

Attys.

UNITED STATES PATENT OFFICE.

CHRISTOPHER A. STECKERT AND ERNEST W. O'BRIEN, OF ROCKY MOUNT, NORTH CAROLINA; SAID O'BRIEN ASSIGNOR TO CHARLES W. PAYNE, OF ROCKY MOUNT, NORTH CAROLINA.

LOCOMOTIVE-FRAME-PEDESTAL BRACE.

1,068,944. Specification of Letters Patent. Patented July 29, 1913.

Application filed March 5, 1913. Serial No. 752,023.

To all whom it may concern:

Be it known that we, CHRISTOPHER A. STECKERT and ERNEST W. O'BRIEN, both of Rocky Mount, in the county of Edgecombe and State of North Carolina, have jointly invented a certain new and useful Improvement in Locomotive-Frame-Pedestal Braces, of which improvement the following is a specification.

Our invention relates to braces or binders used for connecting the lower ends of the pedestal jaws of locomotive engine frames, and its object is to produce a device of this class which shall be of simple, strong, and inexpensive construction, of ready applicability, in connection with frames of the present standard constructions, and by the application of which a pedestal wedge, wedge bolt, or shoe may be removed and replaced, for lining or renewal, whenever desired, without the necessity of "spotting" the wheels or detaching the pedestal brace, thereby materially reducing the time and labor required for such operation, as compared with present practice in work of the character stated.

The improvement claimed is hereinafter fully set forth.

In the accompanying drawings: Figure 1 is a side view, in elevation, of a portion of a locomotive engine frame, illustrating an application of our invention, the pedestal brace being shown partly in vertical central section; Fig. 2, a horizontal section through the pedestal brace, on the line *a a* of Fig. 1; and Fig. 3, a similar section through one of the pedestal jaws, on the line *b b* of Fig 1.

Our invention is herein exemplified as applied in connection with a locomotive frame pedestal of the ordinary form, that is to say, comprising two vertical jaws or legs, 1^a, which extend downwardly from the top frame rail, 1, at a proper distance apart to admit between them a driving box, pedestal wedge, and shoe, of any suitable and preferred form. The driving box, which is not shown, is, as usual, fitted between two liners, viz: a pedestal wedge, 2, which abuts against the inclined inner face of one of the pedestal jaws, and a shoe, 3, abutting against the vertical inner face of the other jaw.

In the practice of our invention, we provide a pedestal brace, 4, having openings of rectangular section extending vertically through it, adjacent to its ends, of proper size, and at a proper distance apart, to embrace the lower ends of the pedestal jaws, 1^a. The opening which receives the pedestal jaw against which the wedge, 2, abuts, is extended both transversely and longitudinally of the brace, on its side nearer the middle vertical plane of the pedestal, to receive a detachable supporting block, 5, the length of which, that is to say, its dimension in a transverse plane of the brace, is slightly greater than the width, or distance across the flanges, of the wedge, 2, so as to enable the latter to be easily passed through the opening in the brace when the block, 5, is withdrawn therefrom. The block is pressed against the adjacent pedestal leg, and held in operative position, by a vertical clamping wedge, 6, passing through the brace and bearing on the side of the block nearer the middle vertical plane of the pedestal, said wedge being of cylindrical form and threaded, at and near its lower end, and provided with nuts, 6^a, which bear on a washer, 6^b, abutting on the lower side of the pedestal. By screwing up the nuts, 6^a, the block, 5, will be forced to a tight bearing on the pedestal brace, and by detaching them and backing out the clamping wedge, 6, the block, 5, will be loosened and may be removed whenever desired.

The pedestal wedge, 2, is supported in position, and tightened, as from time to time may become necessary, by a wedge bolt, 7, of ordinary form, said bolt having a head on its upper end which engages a recess in the lower part of the wedge, 2, and being threaded to engage a corresponding internal thread in the supporting block, 5, and provided with a squared end for the application of a wrench. It will be obvious that, if preferred, the wedge bolt, 7, may, with the same operative result, be fitted freely in the supporting block and its threaded portion be engaged by a nut bearing on the lower side thereof. It will also be seen that by the loosening and removal of the supporting block, as above described, the pedestal wedge and wedge bolt may be removed through the opening in the pedestal brace, without loosening or taking down the latter. The insertion of the wedge and wedge bolt

may correspondingly be made without the detachment of the brace.

While we have herein described and shown the detachable supporting block as used only in connection with the pedestal wedge and wedge bolt, it may, of course, be similarly applied below the shoe which forms the liner of the opposite side of the driving box, to admit of the removal and replacement of the shoe without taking down the pedestal brace.

The connection of the pedestal brace to and its support on, the pedestal are effected by horizontal wedges, 8, which pass through transverse openings in the pedestal brace, adjoining its ends, their outer inclined sides bearing on the brace and their inner straight sides fitting in, and bearing on, transverse grooves in the outer sides of the pedestal legs, adjoining the lower ends thereof. The openings in the pedestal brace are counterbored at their ends adjoining the driving wheel, and the wedges, 8, are cylindrical and threaded at their outer ends, to engage nuts, 8^a, bearing on the counterbores of the brace. The engagement of the horizontal wedges with the grooves of the pedestal jaws, enables the brace to be supported without necessitating the use of independent bolts for that purpose, and the wedges thus perform the double function of supporting the pedestal brace and of enabling lost motion to be taken up, as may from time to time be required to maintain a tight connection with the pedestal. By removing the nuts and backing out the wedges, the pedestal brace can be readily taken down, when desired.

The advantages of our invention as a time and labor saver will be apparent to those familiar with shop operations in locomotive maintenance. In locomotives fitted with pedestal braces of the ordinary construction, the lining of a set of pedestal wedges would ordinarily require from 16 to 18 hours time of a machinist and two helpers, while by reason of the exemption from the necessity of removing and replacing the pedestal braces, which is afforded by our invention, the same work can be done by a machinist and a single helper in from 3 to 4 hours.

We claim as our invention and desire to secure by Letters Patent:—

1. The combination, with a locomotive frame pedestal, of a pedestal brace, and means, connected with said brace, for permitting the insertion and removal of a driving box liner in and from the pedestal, while the journal box is in position therein, without detachment of the pedestal brace therefrom.

2. The combination with a locomotive frame pedestal, of a pedestal brace, a removable supporting block fitting an opening therein located adjacent to one of the pedestal jaws and of slightly greater length than the width of a driving box liner, and means for clamping the supporting block in said opening.

3. The combination of a locomotive frame pedestal, a pedestal wedge fitting on one of the jaws thereof, a pedestal brace connected to the pedestal, a removable supporting block fitting in an opening in the pedestal brace of slightly greater length than the width of the pedestal wedge, a wedge bolt engaging the pedestal wedge at its upper end and having a threaded engagement with the supporting block, and a clamping wedge bearing on the supporting block and on the pedestal brace.

4. The combination of a locomotive frame pedestal, a pedestal brace having vertical through openings which receive the pedestal legs, wedges extending transversely in the pedestal brace and bearing thereon and fitting in the grooves of the pedestal legs, and nuts engaging threaded ends on said wedges and bearing on one side of the pedestal brace.

CHRISTOPHER A. STECKERT.
ERNEST W. O'BRIEN.

Witnesses:
JOHN A. CUTHWELL,
A. W. ARRINGTON.

Copies of this patent may be obtained for five cents each, by addressing the "Commissioner of Patents, Washington, D. C."