United States Patent [19]

Schmitt

[11] **3,896,717**

[45] **July 29, 1975**

[54] **ROOF TRUSS MACHINE**

[76] Inventor: **Jack N. Schmitt,** 64 Park St., Troy, Mich. 48084

[22] Filed: **Aug. 13, 1973**

[21] Appl. No.: **387,735**

[52] **U.S. Cl.** **100/100;** 100/218; 100/231; 100/295; 100/DIG. 18; 227/152

[51] **Int. Cl.** **B30b 15/04**

[58] **Field of Search** ..... 100/100, 218, DIG. 13, 100/295, 231; 227/152

[56] **References Cited**

UNITED STATES PATENTS

3,255,943	6/1966	Sanford	100/DIG. 13
3,358,589	12/1967	Hentzschel	100/100
3,487,430	12/1969	Schmitt	100/231
3,709,762	1/1973	Chandler	100/DIG. 13
3,742,569	7/1973	Moehlenpah	100/DIG. 13
3,824,919	7/1974	Moehlenpah	100/231 X

Primary Examiner—Billy J. Wilhite
Attorney, Agent, or Firm—Cullen, Settle, Sloman & Cantor

[57] **ABSTRACT**

A system for assemblying wooden trusses by joining the individual wooden members with spiked connector plates squeezed into opposite sides of each joint by a gantry-supported C-clamp type press. A jig system comprises individual support tables slidably mounted on a floor track for positioning beneath each truss joint. The member-supporting surface of each table is cantilevered from supporting legs on the side innermost of the truss, so that the press can freely move in a straight path along the line of tables, parallel with the truss sides, without having to be swung in and out between the legs of each table. A pair of transfer devices are positioned among the tables to lift the assembled truss from the tables and shift it laterally to a point where it can be stacked for removal from the fabricating area.

2 Claims, 7 Drawing Figures

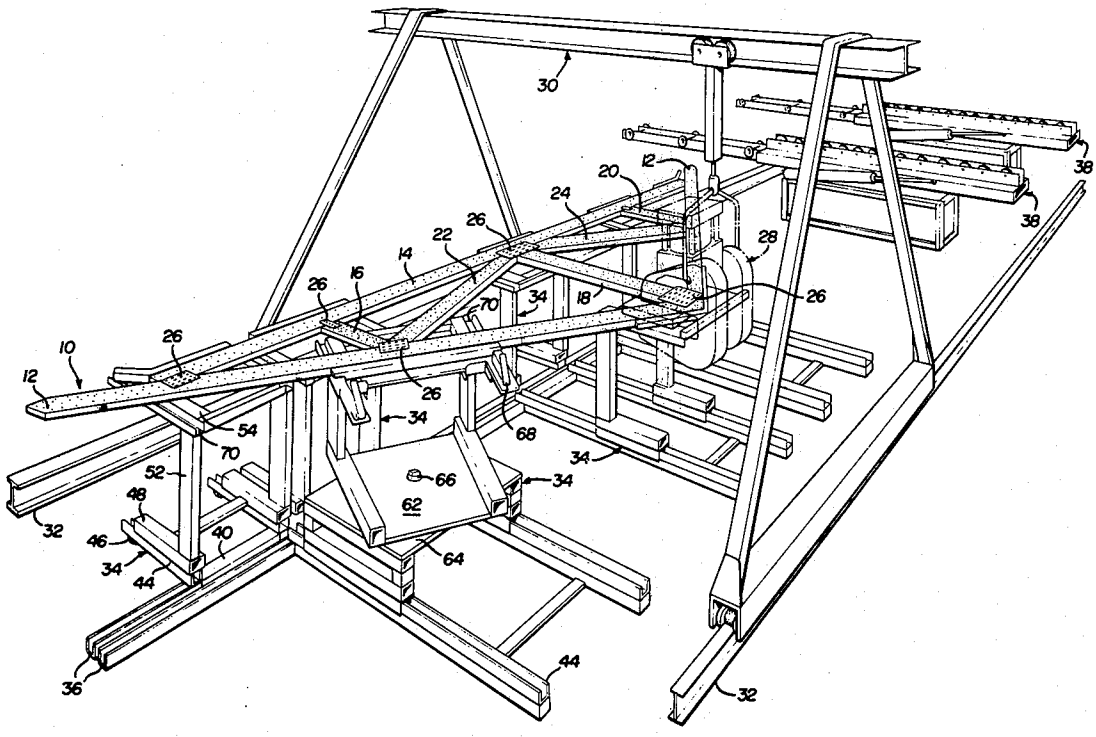

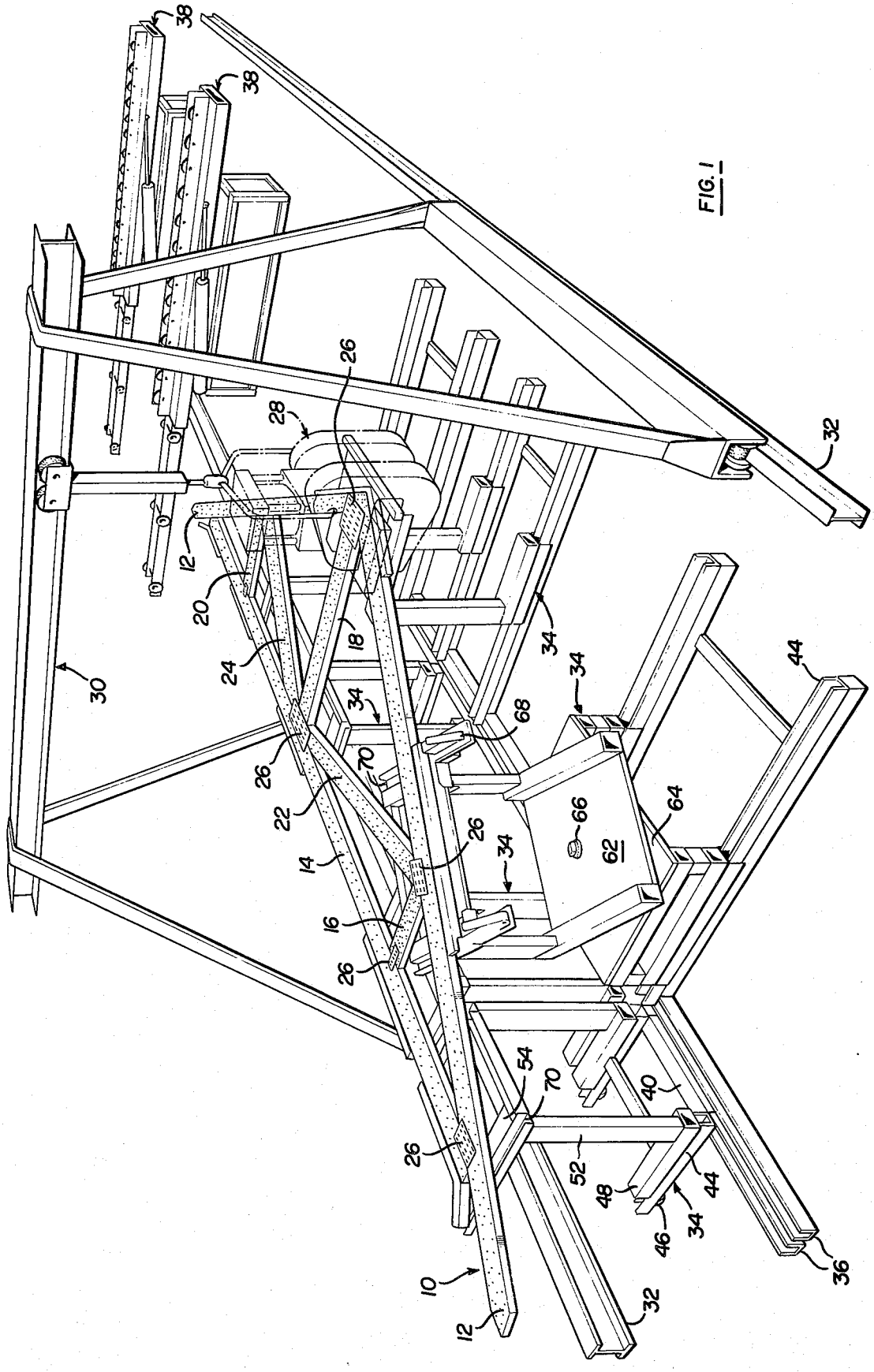
38
38
26
28
32
12
20
24
18
34
34
30
34
68
44
26
70
22
66
64
62
14
26
34
16
26
54
70
40
26
52
48
44
46
34
36
10
12
32

FIG. 1

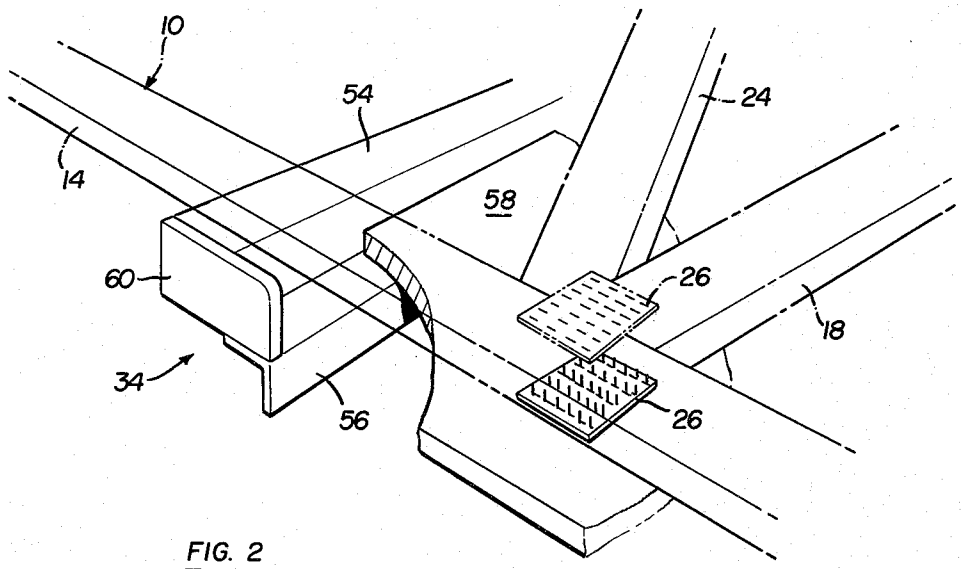

FIG. 2

FIG. 3

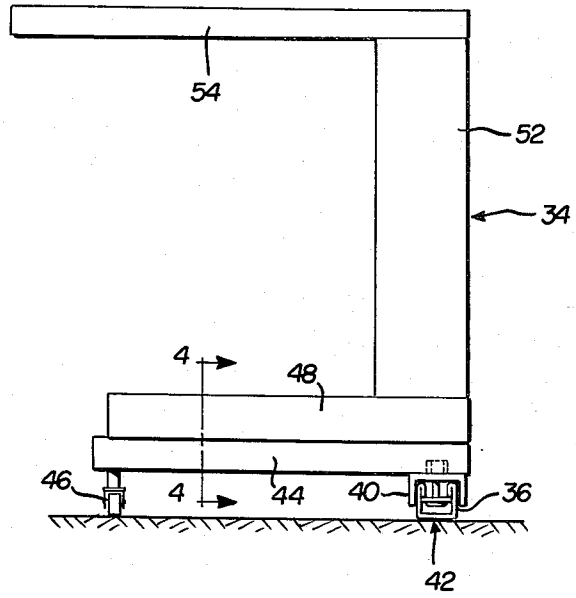

FIG. 4

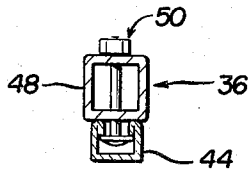

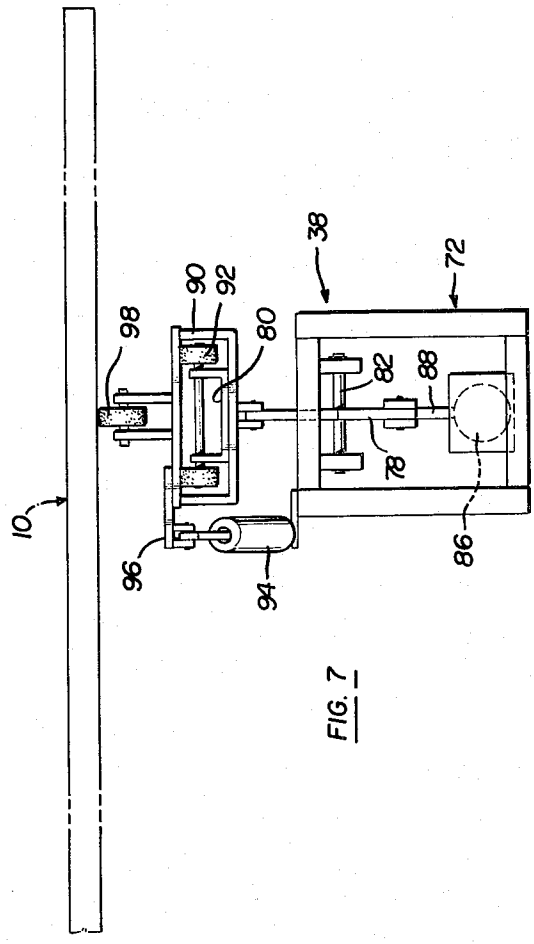

FIG. 7

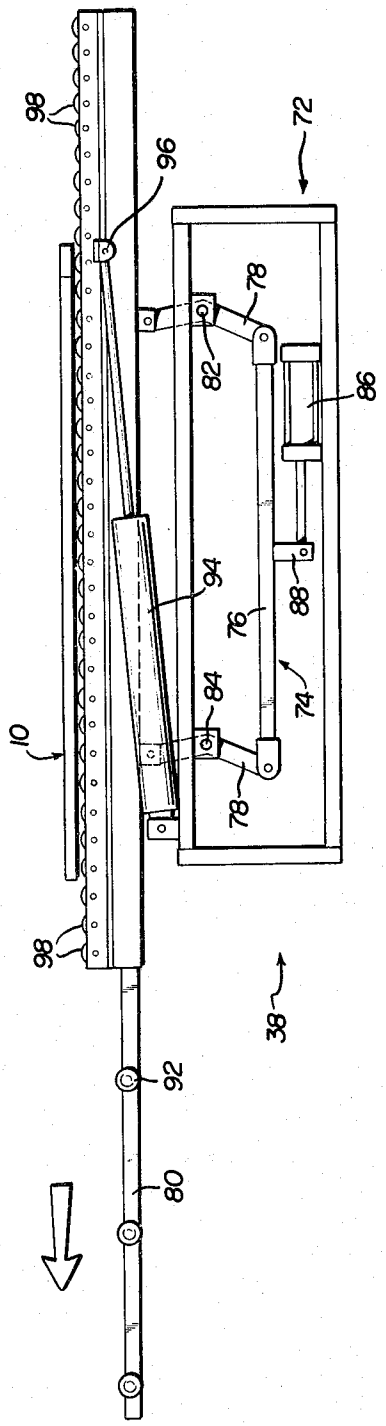

FIG. 6

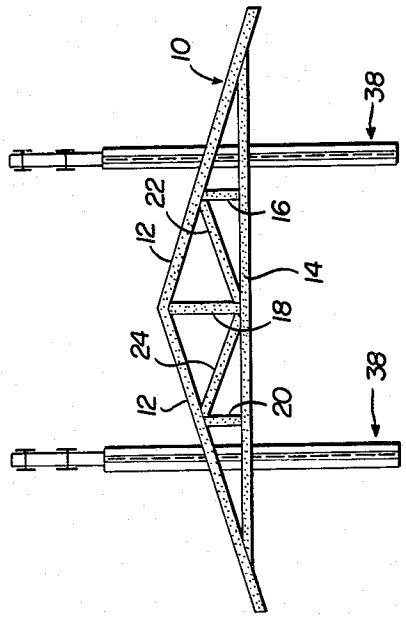

FIG. 5

ROOF TRUSS MACHINE

BACKGROUND OF INVENTION

This invention relates to improvement in the apparatus disclosed in my prior patent entitled "Roof Truss Machine," U.S. Pat. No. 3,487,430, issued on Dec. 30, 1969. That patent describes the now widely used system of pre-fabricating wood roof trusses and similar roof frames by clamping pre-cut wood elements on a series of pedestals or tables which are adjustably located to support the ends of each pre-cut member at its point of abutment with an adjacent member. Spiked connector plates are manually positioned above and below each abutting joint, and a self-propelled gantry-supported C-clamp press is guided around the series of pedestals to imbed each pair of connector plates to thereby fasten the individual wood members into a rigid truss assembly.

While the pre-fabricating techniques disclosed in my prior patent have produced substantial economies in the production of such trusses, there are still several phases of the assembly process which are time-consuming and inconvenient. One such area involves the guiding of the C-clamp type press into position at each of the supporting tables. As the press moves longitudinally along the outline of the truss from one table to the other, the operator must also swing it inwardly and outwardly relative to the truss at each table, to guide it between the table top-supporting legs so that its opposed clamping faces are positioned over the truss joint located approximately in the center of each table top. This is both inconvenient and time-consuming.

Another area of inconvenience has been in the removal of the completed truss from its supporting tables to a temporary stacking area. In the past, it has been customary to utilize at least two identical jig systems aligned end to end. While a team of two or three men is placing the pre-cut wood members and plates on the tables of one system, another man is operating the press at the second system. Then the team switches places with the press operator, removing the assembled truss and setting up the elements of the next one while the press operator clamps together the truss at the first jig system. The removal of a completed truss generally involves two or three men lifting the truss and picking their way through the somewhat cluttered and closely spaced supporting tables in order to transfer the truss from its assembly location to the storage area. This step has been difficult and time-consuming as well.

Accordingly, it is the principal object of this invention to provide an improved apparatus for assembling pre-fabricated wooden trusses, which apparatus provides increased convenience and speed of operation compared with the previously used machines of this character.

BRIEF DESCRIPTION OF THE DRAWINGS

FIG. 1 is a perspective view of the truss-making machine of this invention, showing a truss in place on the supporting tables, but showing the lifting and transferring devices out of their normal position, for clarity of illustration.

FIG. 2 is a fragmentary perspective view of a detail of one of the supporting table tops showing the truss members in phantom.

FIG. 3 is a side elevation of one of the improved supporting tables of this invention.

FIG. 4 is a section throughout the lower portion of the supporting table of FIG. 3, viewed in the direction of arrows 4—4 thereof.

FIG. 5 is a simplified plan view of a completed truss, showing a preferred position of the lifting and transferring apparatus beneath the truss, but eliminating illustration of all of the supporting tables.

FIG. 6 is a side view of one of the lifting and transferring devices of this invention.

FIG. 7 is an end view of the device of FIG. 6.

DETAILED DESCRIPTION OF THE INVENTION

A typical wooden roof truss 10 is shown in position on the truss making machine in FIG. 1 of the drawings. Roof truss 10 comprises a pair of inclined rafters 12, a lower horizontal beam 14, a series of three vertical bracing members 16, 18 and 20, and a pair of diagonal braces 22 and 24. A variety of truss configurations can be assembled on the machine of the present invention, the particular pattern illustrated and described herein being merely exemplary of how the machine is used on a typical arrangement. These individual wooden members are assembled together by pairs of opposed conventional stamped and pierced metal connector plates, which have pierced-out barbs which bite into the wood when the upper and lower connector plates are squeezed toward each other during the assembly process.

The connector plates are imbedded or pressed into the wood by a C-clamp type press 28 which is supported by an overhead gantry 30 which slides along longitudinal gantry tracks 32. The press is preferably self-propelled to traverse from left to right in FIG. 1 along the supporting beam of gantry 30, while the entire gantry itself similarly is power driven to move longitudinally along tracks 32. These motions are typically controlled by an operator who walks with the press as it makes its circuit around the horizontally disposed truss.

The truss is supported on a series of pedestals or tables 34 which are adjustably positioned along a pair of longitudinal tracks 36. Interspersed between tables 34 are a pair of lifting and transfer devices 38. It will be understood that these transfer devices must be located in the spaces between the supporting tables, such as is shown in the simplified plan view of FIG. 5. In FIG. 1, however, they are shown displaced from their normal position merely for ease of illustration.

Referring now to FIGS. 1, 3 and 4, in particular, each of the pedestals or tables 34 is slidably positioned in the longitudinal direction along tracks 36. For this purpose, each table has an inverted channel 40 provided with a locking bolt assembly 42 for clamping it at the desired position along the U-shaped track 36. Each table also has a pair of lower frame members 44, in the form of U-shaped tracks, supported at one end by channel 40 and at the other end by castors 46. The tables can be transversely adjusted in their position by means of lower frame box section members 48 which are slidably positioned and superimposed upon lower frame member 44, and provided with a clamping or locking bolt assembly 50, best shown in FIG. 4. Thus, each table can be positioned as required to place it beneath a joint of the particular size and shape truss being assembled.

A pair of legs 52 support the upper portion of each table, which is in the form of a three-sided peripheral

frame of box section members **54** having inwardly projecting angle irons **56** upon which freely rests panel **58**, best shown in FIG. **2**. The side of the table facing outward away from the truss does not have a member **54**, so as to permit free entry of the press into position at the table. As will be described below, panel **58** supports the lower connector plate **26**, and can be freely lifted upwardly from angle irons **56** by the upward compression stroke of the lower press member. An end stop **60** assures that panel **58** will not slide out of its position from its three-sided support frame.

As shown in the left central portion of FIG. **1**, selected ones of the tables may be provided with rotatable as well as longitudinal and transverse adjustments. For this purpose, a plate **62**, which carries the whole upper portion of the table, is rotatably mounted on a lower fixed plate **64** by means of a pivot bolt **66**, so that the entire upper portion of the table, including its legs, can rotate relative to the lower frame structure. This feature is frequently required for the table positioned beneath the upper end of the outermost vertical bracing members **16**, especially on low pitch trusses where the length of member **16** is so short as to place such table particularly close to the adjacent tables.

As shown in FIG. **1**, each table is provided with a series of clamps **68**, which may be of a conventional toggle design, and which are slidably mounted in clamp channels **70** in the table top. These clamps function to lock the pre-cut individual truss members in place on the tables during the assembly operation.

Referring now to FIGS. **6** and **7** in particular, the lifting and transfer devices **38** generally comprise a rectangular frame **72** to which is pivotally mounted a parallelogram linkage generally shown at **74**. The parallelogram linkage comprises lower beam **76**, end legs **78** and upper rail **80**. End legs **78** are pivotally supported on axles **82**, **84** carried by frame **72**.

The parallelogram linkage **74** is selectively actuated by a hydraulic or pneumatic lift cylinder **86** secured to frame **72** and having its rod connected at **88** to lower beam **76** of the linkage. When lift cylinder **86** is actuated to its illustrated extended position, lower beam **76** moves toward the left (as shown in FIG. **6**), and end legs **78** pivot clockwise about axles **82** to lift upper rail **80** vertically upward and to the right slightly. Similarly, retraction of the rod of lift cylinder **86** rotates legs **78** counterclockwise, returning upper rail **80** to its lower position.

A transfer beam **90** of generally box-section configuration is slidably supported on rollers **92** mounted on upper rail **80**. Thus, actuation of a transfer cylinder **94** supported on frame **72** functions to extend or telescope transfer beam **90** to the right (as shown in FIG. **6**), relative to upper rail **80**, through the connection at **96**. The transfer beam **90** itself is provided with a series of rollers **98** which permit truss **10** to be readily rolled along the upper surface of the transfer beam.

OPERATION

Assembly of a truss begins with the proper positioning of support tables **34** along longitudinal tracks **36** and transverse tracks **44**. Once positioned, the tables can be left in place for a production run of trusses of the same design.

Next, the pre-cut truss members are laid in place on tables **34** and secured by clamps **68**. An upper and lower connector plate **26** is then positioned at each abutting joint of the truss members. The upper connector plate **26** is laid across the top of the joint, with the spikes facing downwardly, while the lower connector plate is laid on movable panel **58** of the table, with the spikes pointing upwardly toward the truss joint. As will be apparent from FIG. **2**, the truss members actually rest upon the box section portions **54** of the table, the upper surface of which is spaced sufficiently above the upper face of panel **58** to permit lower connector plate **26** to be slid into place beneath the joint of the truss.

It will also be noted from FIGS. **1** and **3** that the upper supporting surface of each table is cantilevered from only two legs **52**, which legs are on the side of the table innermost of the truss. A significant advantage results from this unique design. As will be apparent from FIG. **1**, as the C-shaped press **28** moves around the outer periphery of truss **10**, it can freely move in a straight path parallel and in close proximity to the truss, since there are no outwardly spaced vertical table-supporting legs to interfere with its free passage. Thus, the press need not move inwardly and outwardly relative to the periphery of the truss as it is positioned for actuation at each table. This is a substantial time-saving feature of this table configuration. Once positioned, with the lower press member beneath panel **58** and the upper press member over the upper connector plate, the press is actuated, and the lower portion of the press is hydraulically or pneumatically raised to engage the lower face of table top panel **58**, momentarily lifting panel **58**, and the lower connector plate **26** which it supports, upwardly and thereby simultaneously imbedding the upper and lower connector plates into the truss joint. The free movement of panel **58** means that the truss members can remain substantially stationary on the table during the imbedding operation, as the lower plate **26** is lifted upwardly with panel **58**, thus substantially reducing the tendency to disturb the position of unconnected joints at adjacent tables. Upon release of the compression of the press, panel **58** drops back down onto angle irons **56**.

When the operator has made the complete circuit around the truss, squeezing the connector plates together at each of the tables, the lifting and transfer devices **38** are actuated to lift the completed truss **10** upwardly from the individual support tables **34** and to transfer the truss laterally away from the table area. It will be understood that the normal height of the rollers **98** of transfer beam **90** is below the top of the tables when lift cylinder **86** is in its retracted condition, so that transfer devices **38** only engage the underside of the completed truss when lift cylinder **86** is extended. It will also be understood that a typical installation of the truss making machines of the present invention comprises at least two longitudinally spaced machines or jig systems aligned end to end, to be serviced by a single gantry **30** as described above. When the gantry operator has completed one truss, he transfer the gantry along tracks **32** to the adjacent machine, thus permitting the assembled truss to be transferred laterally by simultaneous actuation of the two transfer devices **38**. This eliminates the above-described problems associated with the assembly team walking the truss through the table area.

This invention may be further developed within the scope of the following claims. Accordingly, the above specification is to be interpreted as illustrative of only

a single operative embodiment of this invention, rather than in a strictly limited sense.

I now claim:

1. In a machine for assembling wooden trusses from individual abutting structural members joined together by spiked connector plates, wherein the machine is of the type having a plurality of support tables adjustably positioned along a floor track means and arranged to support the horizontally arranged structural members at their points of abutment, and further having a wheeled gantry supporting a C-clamp type press for movement along the outer periphery of the truss to join the truss members together by embedding connector plates into the members at each of the table-supported abutment points, the improvement in said support tables comprising;

a lower frame adapted to slidably engage the floor track means for adjustable positioning therealong; said lower frame including a downwardly opening channel slidably mounted on said floor track means for adjustment of said support table in a first direction, a pair of spaced apart upwardly opening U-shaped lower frame members each having a first end attached to said channel, and a pair of parallel box frames, each slidably superimposed on one lower frame member for adjustment of said support table transversely of said first direction;

an upper support surface adapted to support individual truss members at their point of abutment; said upper support surface including a pair of horizontal legs each parallel to a box frame and interconnected at one end by a third horizontal leg parallel to said downwardly opening channel, said support surface being open on one side; and

a pair of vertical legs rigidly securing said pair of horizontal legs to said lower frame at said one end of said pair of legs so that said upper support surface is cantilevered to said lower frame;

said upper support surface being rigidly secured to said lower frame with the space immediately beneath the one open side of said upper support surface being otherwise completely open and free of any obstruction, whereby the, C-clamp type press can freely move from table to table in a straight path along and parallel to the outer periphery of the truss, without having to move perpendicularly to the sides of the truss to clear tablesupporting legs.

2. The support tables of claim **1** wherein selected ones of said tables include a lower plate rigidly mounted to said box frames and an upper plate rotatably mounted to said lower plate by a vertical pivot bolt, said upper plate supporting said cantilevered vertical legs and upper support surface so that said cantilevered vertical legs and upper support surface are rotatably mounted about a vertical axis relative to said lower frame.

* * * * *