July 25, 1933. E. B. WILCOX 1,919,817

AUTOMATIC CUT-OUT DEVICE FOR THE STARTING MOTORS OF INTERNAL COMBUSTION ENGINES

Filed Sept. 15, 1931

Fig. 2.

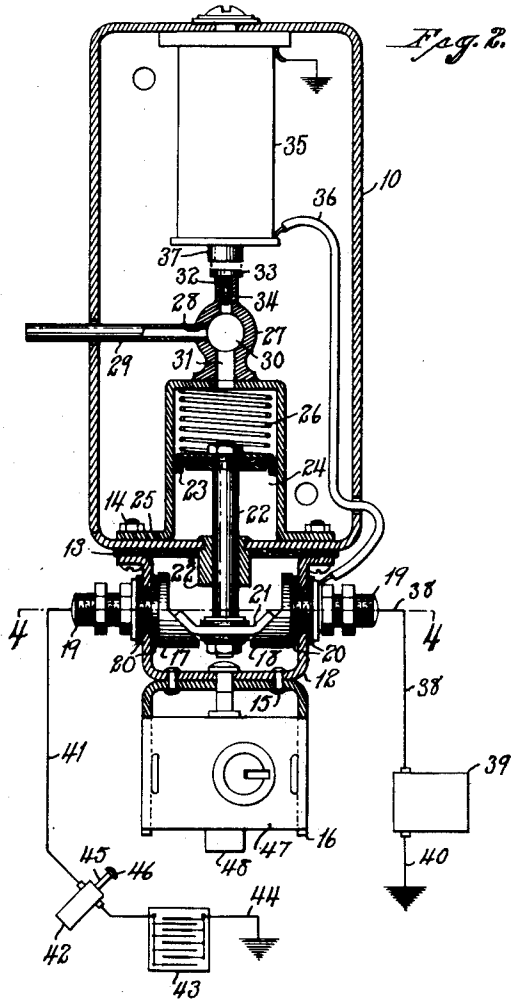

Fig. 3.

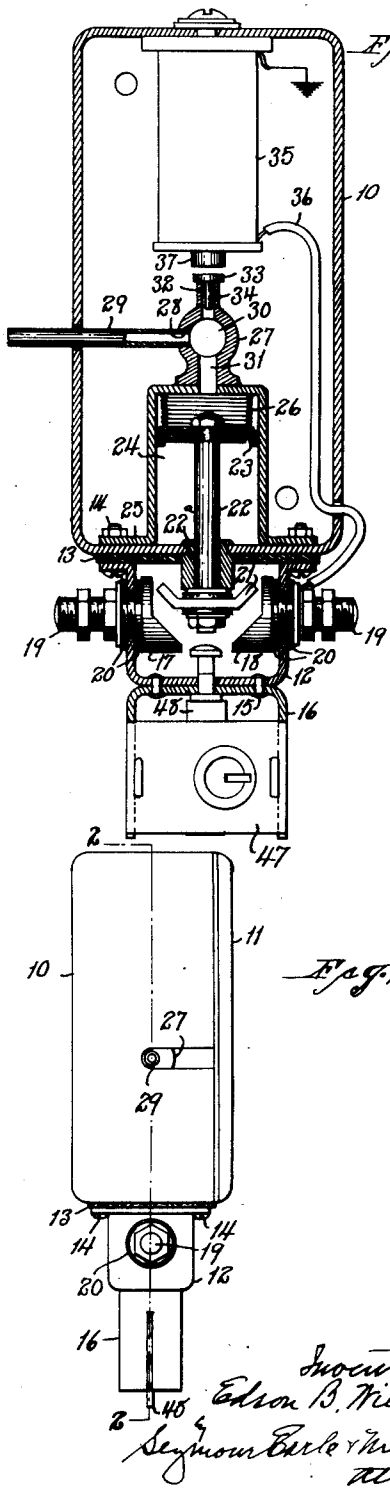

Fig. 1.

Fig. 4.

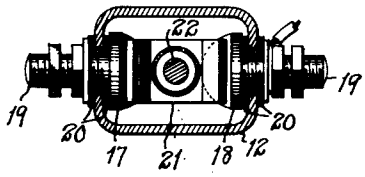

Inventor
Edson B. Wilcox
by Seymour Earle & Nichols
Attys

Patented July 25, 1933 1,919,817

UNITED STATES PATENT OFFICE

EDSON B. WILCOX, OF MERIDEN, CONNECTICUT

AUTOMATIC CUT-OUT DEVICE FOR THE STARTING MOTORS OF INTERNAL COMBUSTION ENGINES

Application filed September 15, 1931. Serial No. 562,888.

This invention relates to improvement in automatic cut-out devices for the starting-motors of internal-combustion engines, that is to say, devices which will normally prevent the starting-motor from being inadvertently thrown into action when the engine is running.

One of the main causes responsible for the derangement of the so-called "self-starters" of automobiles and the like has been that the starting-motors have been inadvertently thrown into action when the motor was already running. Such inadvertent action results from numerous causes, such as the operator accidentally stepping on the starter-button when intending to actuate the accelerator, or the intentional operation of the starter-switch under the misapprehension that the engine has stalled, owing to its quiet running.

One of the main objects of my present invention is to provide a superior, simple and reliable automatic cut-out device which will prevent the starting-motor from being energized when the internal-combustion engine, of which it forms an adjunct, is already running, and thus minimize the danger of damage to the said motor or the mechanism which serves to connect the same with the engine.

With the above and other objects in view as will appear from the following, my invention consists in an automatic cut-out device of the type referred to, having certain features of construction and combinations and arrangements of parts as will be hereinafter described and particularly recited in the claims.

In the accompanying drawing:

Fig. 1 is a view in edge elevation of an automatic cut-out device constructed in accordance with my invention;

Fig. 2 is a view thereof in central longitudinal section, taken on the line 2—2 of Fig. 1 but on a larger scale, and showing the parts in the positions which they assume when the engine is at rest;

Fig. 3 is a view corresponding to Fig. 2 but showing the parts in the positions which they assume during the normal running of the engine; and

Fig. 4 is a transverse sectional view taken on the line 4—4 of Fig. 2.

The particular automatic cut-out device herein chosen for the illustration of my invention includes a box-like rectangular casing 10 provided at its open face with a removable cover 11 and having secured to its underface a cup-shaped switch-housing 12 which is separated from the said casing 10 by a sheet of insulating material 13 and secured in place by bolts 14.

Secured in turn to the underface of the switch-housing 12 by means of rivets 15 is a lock-frame 16 by means of which the cut-out mechanism may be locked in its circuit-breaking position, as will hereinafter appear.

The switch-housing 12 has mounted in two of its opposite walls, contact-members 17 and 18 respectively, each provided with a threaded stem 19 extending outwardly through its complementary wall of the housing 12 and insulated therefrom by suitable washers 20. Coacting with and adapted to electrically interconnect the said contacts 17 and 18 is a switch-blade 21 mounted upon the lower end of a plunger 22 bearing in a bushing 22^a mounted in the bottom-wall of the casing 10, as clearly shown in Figs. 2 and 3. The upper end of the plunger 22 carries a shallow cup-shaped piston 23 adapted to reciprocate within an inverted, cup-shaped sheet-metal cylinder or suction-chamber 24 having at its lower end an outwardly-extending annular flange 25 through which the bolts 14 already referred to extend for holding the cylinder in place. Interposed between the upper wall of the cylinder 24 and the piston 23 is a helical spring 26 exerting a constant effort to move the said piston 23 and plunger 22 downward so as to engage the switchblade 21 with the contacts 17 and 18.

Secured to the upper end of the cylinder 24 by solder, or any other suitable means, is a head-piece 27 having an opening 28 in its side-wall for the reception of a suction-tube 29 leading to the intake-manifold of the internal-combustion engine (not shown) of

which my improved device forms an adjunct. The head-piece 27 is also formed with a central chamber 30 into which the tube 29 opens, and with a longitudinal passage 31 leading to the upper end of the cylinder or suction-chamber 24. Extending upward from the chamber 30 is a relief-passage 32 adapted to permit the entrance of the atmosphere under conditions as will hereinafter be described, and normally closed by a reciprocating vacuum-control valve 33 formed of magnetic material and having a stem 34 riding in the passage 32 just referred to.

Within the upper end of the casing 10 and directly over the head-piece 27 therein I mount an electro-magnet 35 having one of its terminals grounded as shown and its other terminal electrically connected by means of a wire 36 to the stem 19 of the contact 18. The lower end of the core 37 of the said electro-magnet 35 extends into a position closely adjacent the vacuum-control valve 33 so as to lift the latter when energized for the purpose of admitting atmospheric air into the passage 32 and hence into the vacuum-tube 29 for the purpose of preventing the creation of a vacuum in the suction-chamber or cylinder 24 and the consequent lifting of the piston 23 and the movement of the switch-blade 21 out of engagement with the contacts 17 and 18 under conditions as will be hereinafter described.

In Fig. 2 of the accompanying drawing I have schematically indicated the starting-motor circuit of an internal-combustion engine, which circuit as shown includes a conductor 38 leading from the stem 19 of the contact 18 to one terminal of the starting-motor 39, the other terminal of which is grounded by means of a conductor 40. The stem 19 of the complementary contact 17 is connected by means of a conductor 41 to one terminal of a starting-switch 42, the other terminal of which is connected to a storage-battery 43 which, in turn, has its other terminal grounded by a conductor 44.

The starting-switch 42 just above referred to may be of the so-called "foot-operated" type as shown, an automatic switch, or a manually-operated switch, without in any way affecting the performance of my improved automatic cut-out device. The foot-operated switch 42 herein chosen for illustration is provided with the usual plunger 45 having a so-called "foot-button" 46 at its outer end.

Let it be presumed for purposes of description that the engine is idle, in which case the parts will occupy the positions in which they are shown in Fig. 2. Now, if it is desired to start the engine, this may be accomplished by actuating the starting-switch 42 so as to cause a supply of current to flow from the battery 43 through the conductor 41, contact 17, switch-blade 21, contact 18, conductor 38, through the starting-motor 39, so that the said motor will act to start the engine.

Now it is to be noted that coincidentally with the energization of the starting-motor 39 as just above described, current will also flow through the electro-magnet 35, with the effect of causing the same to lift the suction-relief valve 33 and thus admit air from the atmosphere into the chamber 30 to prevent the creation of a vacuum in the suction-chamber 24 which if permitted to act at this time would lift the switch-blade 21 and break the circuit to the starting-motor 39. As long as the starting-switch 42 is held in its circuit-closing position the electro-magnet 35 will be energized with the effect of holding the valve 33 off its seat and thus preventing the suction from the intake manifold of the engine from moving the switch-blade 21 into its open-circuit position.

When the engine has been started and pressure removed from the starting-switch button 46 so as to break the starting-motor circuit, the electro-magnet 35 will be coincidentally de-energized and thus permit the suction-relief valve 33 to drop into its seated position to prevent the further entrance of atmospheric pressure into the suction-chamber 24. This movement of the valve 33 into its closed position will immediately permit the suction to act to lift the piston 23, with the effect also of lifting the switch-blade 21 and hence disconnect the contacts 17 and 18 from each other. The parts will now have assumed the positions in which they are shown in Fig. 3 of the drawing.

Now if for any reason the operator should accidentally or intentionally under the misapprehension that the engine is not running, again throw the starting-switch 42 into its closed circuit position, no current can flow to the starting-motor 39 owing to the electrical gap between the contacts 17 and 18 now existing, nor can any current flow through the electro-magnet 35 to cause the same to lift the valve 33 to "kill" the vacuum, so to speak, and thus permit the switch 21 to again move into its closed-circuit position.

Damage to the starting-motor or to the mechanism which serves to connect the same to the engine is, by the automatic action above described, prevented.

In the event that for any reason the engine should stop, the vacuum, of course, will cease to hold the switch-blade 21 in its open-circuit position and permit the spring 26 to move the same downward into its closed-circuit position, so that the parts would again resume the positions in which they are shown in Fig. 2 of the drawing in position to enable the engine to again be started when desired.

Should the operator desire to guard

against the unauthorized starting of the engine, he may do so by inserting a key in a lock 47 located within the lock-frame 16 before referred to, and effect the extension of the lock-bolt 48 from the position in which it is shown in Fig. 2 to the position shown in Fig. 3. In the latter position, the bolt will serve to maintain the switch-blade 21 in its open-circuit position and thus preclude the flow of current to the starting-motor 39.

In referring herein and in the appended claims to vacuum or suction created by the engine, it will be understood that I do not limit my invention to securing such suction or vacuum from the intake-manifold of the engine; it being necessary only that the creation of the suction or vacuum be dependent upon the active running of the engine and may originate in a special feature of such an engine, such, for instance, as a distinct suction- or vacuum-pump driven by such engine.

It will be understood by those skilled in the art that my invention may assume varied physical forms without departing from my inventive concept, and I, therefore, do not limit myself to the specific embodiment herein chosen for illustration, but only as indicated in the appended claims.

I claim:

1. In a device of the class described, the combination with an internal-combustion engine, a starting-motor for the said engine and an electric circuit for the said motor; of an automatic vacuum-operated switch interposed in the said circuit and constructed and arranged to be moved into its open-circuit position by suction developed by the said engine electro-magnetic means associated with the said switch and connected into the said circuit and constructed and arranged so as to act, when energized by current flowing in the said circuit, to prevent the said vacuum-operated switch from being moved into its open-circuit position by the suction action of the said engine.

2. In a device of the class described, the combination with an internal-combustion engine, a starting-motor for the said engine and an electric circuit for the said motor; of an automatic vacuum-operated switch interposed in the said circuit and constructed and arranged to be moved into its open-circuit position by suction developed by the said engine a vacuum-control valve constructed and arranged to control the suction from the said engine to the said vacuum-operated switch; electric-magnetic means connected in the said circuit and constructed and arranged to act when energized by current flowing in the said circuit to move the said valve into position to prevent the suction from the said engine from moving the said switch into its open-circuit position.

3. In a device of the class described, the combination with an internal-combustion engine, a starting-motor for the said engine and an electric circuit for the said motor; of an automatic vacuum-operated switch interposed in the said circuit and to be moved into its open-circuit position by suction developed by the said engine a vacuum-relief valve constructed and arranged to admit atmospheric air to the suction-side of the said engine to prevent the said suction from operating the said switch; electro-magnetic means connected in the said circuit and constructed and arranged to act when energized by current flowing in the said circuit to open the said vacuum-relief valve to admit air to the suction side of the said engine and prevent the said vacuum-operated switch from being moved into its open-circuit position by the suction action of the said engine.

4. In a device of the class described, the combination with the intake-manifold or equivalent source of suction of an internal-combustion engine, a starting-motor for the said engine and an electric circuit for the said motor; of a suction-chamber connected to the said intake-manifold, a switch-actuating member in the said suction-chamber; a switch operatively connected to the said switch-actuating member for being moved into its open-circuit position thereby and interposed in the said circuit; and electro-magnetic means connected into the said circuit and constructed and arranged so as to act when energized by current flowing in the said circuit to prevent the creation of vacuum in the said suction-chamber and the consequent movement of the said switch into its open-circuit position by the said suction.

5. In a device of the class described, the combination with the intake-manifold or equivalent source of suction of an internal-combustion engine, a starting-motor for the said engine and an electric circuit for the said motor; of a suction-chamber connected to the said intake-manifold, a switch-actuating member in the said suction-chamber; a switch operatively connected to the said switch-actuating member for being moved into its open-circuit position thereby and interposed in the said circuit; a vacuum-control valve constructed and arranged to control the creation of vacuum in the said suction-chamber; and electro-magnetic means connected into the said circuit and constructed and arranged to act when energized by current flowing in the said circuit to move the said valve into position to prevent the suction from the said intake-manifold from creating a vacuum in the said suction-chamber and the consequent movement of the said switch into its open-circuit position by the said suction.

6. In a device of the class described, the combination with the intake-manifold or

equivalent source of suction of an internal-combustion engine, a starting-motor for the said engine and an electric circuit for the said motor; of a suction-chamber connected to the said intake-manifold, a switch-actuating member in the said suction-chamber; a switch operatively connected to the said switch-actuating member for being moved into its open-circuit position thereby and interposed in the said circuit; a vacuum-relief valve constructed and arranged to control the entrance of atmospheric air into the said suction-chamber; and electro-magnetic means connected into the said circuit and constructed and arranged so as to act when energized by current flowing in the said circuit to open the said vacuum-relief valve and admit air into the said suction-chamber to prevent the creation of vacuum therein and the consequent movement of the said switch into its open-circuit position by the said suction.

EDSON B. WILCOX.