Oct. 11, 1966 J. SASSANO, SR 3,277,507

RUG SHAMPOO ATTACHMENT

Filed July 28, 1964 2 Sheets-Sheet 1

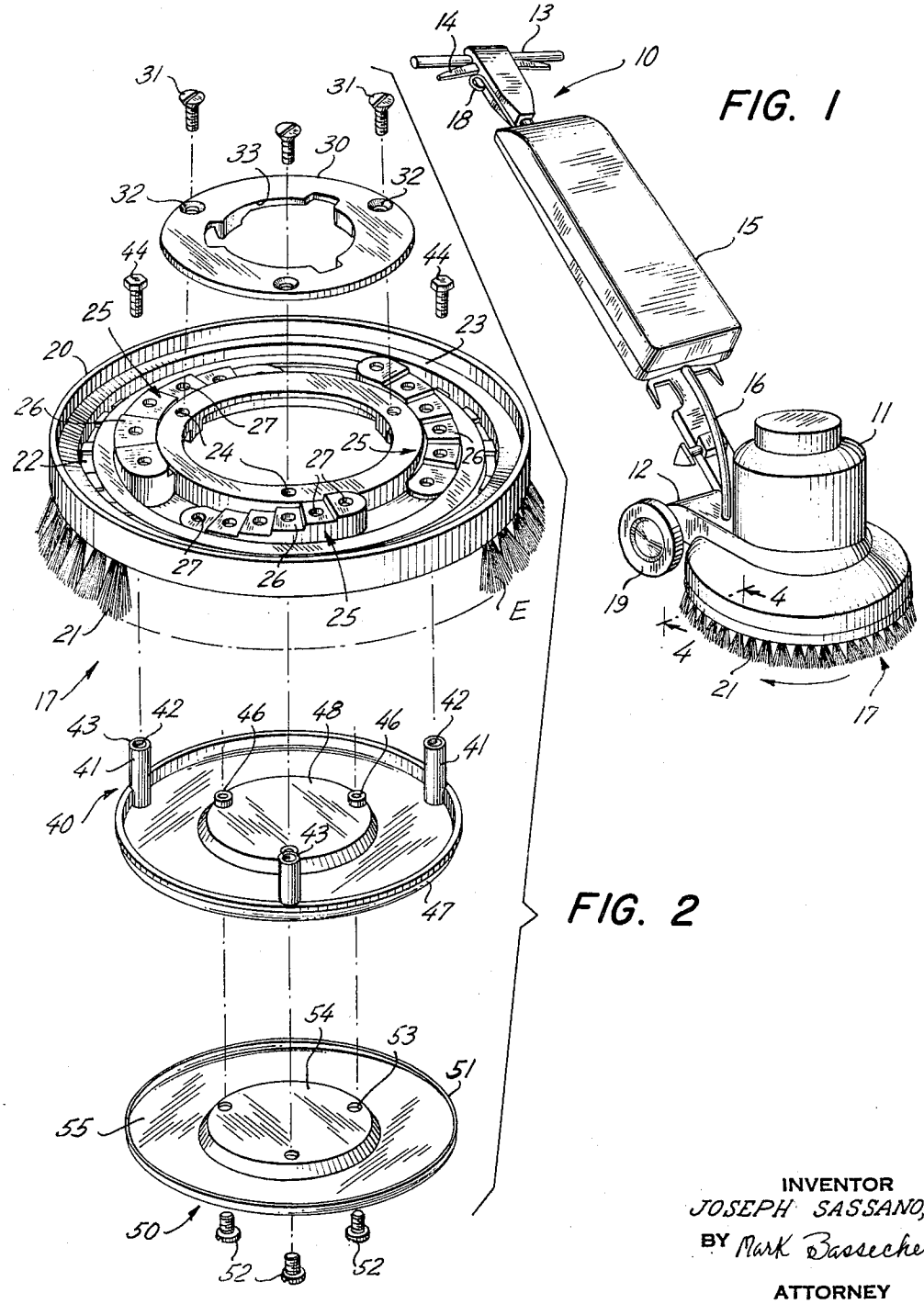

FIG. 1

FIG. 2

INVENTOR
JOSEPH SASSANO, Sr.
BY Mark Bassecher
ATTORNEY

Oct. 11, 1966 J. SASSANO, SR 3,277,507

RUG SHAMPOO ATTACHMENT

Filed July 28, 1964 2 Sheets-Sheet 2

FIG. 3

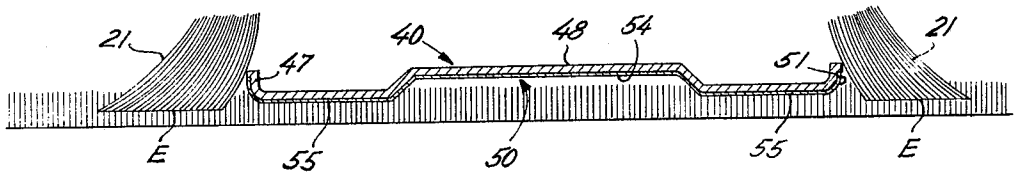

FIG. 4

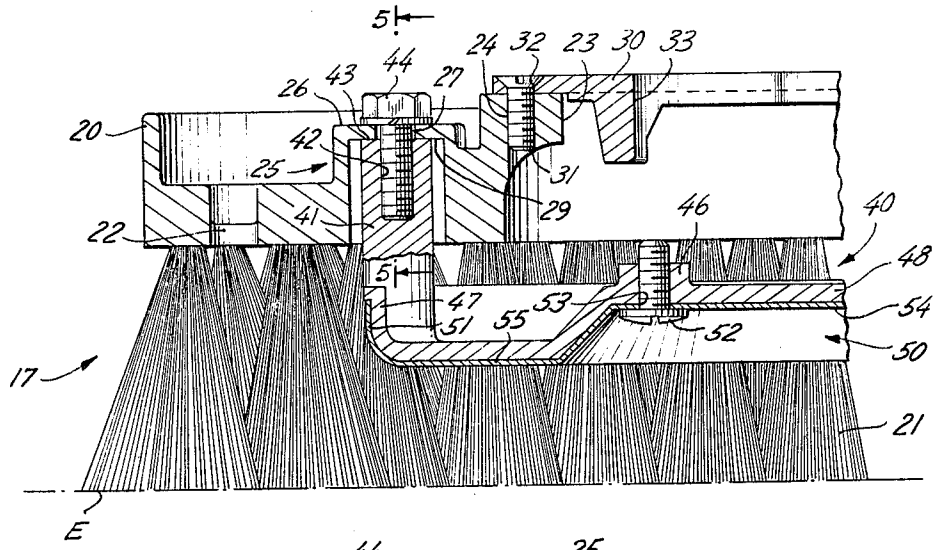

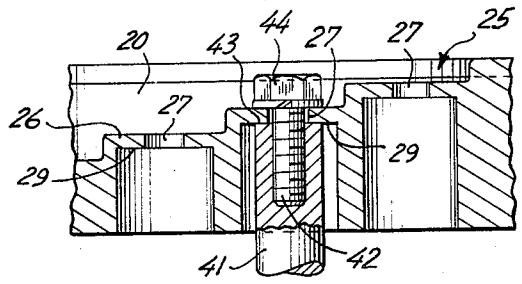

FIG. 5

INVENTOR
JOSEPH SASSANO, Sr.
BY Mark Basseches
ATTORNEY

United States Patent Office

3,277,507

Patented Oct. 11, 1966

3,277,507

RUG SHAMPOO ATTACHMENT

Joseph Sassano, Sr., Yonkers, N.Y., assignor to General Floorcraft, Inc., a corporation of New York

Filed July 28, 1964, Ser. No. 385,662
1 Claim. (Cl. 15—50)

This invention relates to a rug cleaning attachment, and more particularly to a rug cleaning device and brush attachment therefor.

Still more particularly, this invention relates to a device for agitating the pile of a rug during cleaning, to assure maximum penetration of the shampoo composition into the body of the rug.

It is known to clean a rug or the like through the use of rotating brush members which agitate the pile of the rug so as to work the cleaning solution into the rug. A conventional form of cleaner device operating on this principle comprises a housing forming a support for a motor. Drive means are provided for communicating the rotation of the motor to a circular brush member. In use, the weight of the device presses the brush against the rug while the brush is rotated.

Such device, while effective to clean a rug is extremely difficult to maneuver across the surface of a rug. This is particularly true where the rug cleaning device is of the so-called single brush type in which a single brush head is pressed by the weight of the machine against the rug. This difficulty is engendered by the fact that the high coefficient of friction between the bristles and the rug tends to cause the device to shift rapidly or slew across the surface of the rug whenever the lower surface of the brush is not precisely parallel with the surface of the rug.

More particularly, if the brush is rotated clockwise with respect to the floor, pressure on the operating handle tending to tilt the housing toward the operator would tend to increase the pressure on the bristle portions nearest the operator. In the case of such counter-clockwise rotation, the uneven pressure tends to cause the entire device to shift rapidly to the right.

In order to obtain a leftward shifting movement of the device, the device is tilted forward so that the primary weight of the machine is carried by those bristle portions remote from the handel.

The movement of a device of the class described is relatively simple to control, where the same is used to polish a smooth surface, such as a tiled or linoleum covered floor, due to the relatively low coefficient of friction between the bristles and such a floor, which permits slippage between the bristles and the floor. However, controlling the movement of a shampoo device where a rotating bristle brush is shifted across a rug or the like is an extremely difficult undertaking and is to be attempted only by persons having considerable skill, since sidewise movements of the device across the surface of a rug are much more violent due to the high coefficient of friction.

As a result of the difficulty of using a bristle shampoo device, particularly of the single brush type, various expedients for making such use more simple have been attempted. For example, a twin brush unit employing counter-rotating brush members has been suggested. However, such a unit is difficult to maneuver since, by reason of the counter rotation of the brushes, the device must be bodily shifted across the rug, making it impossible to take advantage of the rotary forces provided by the brush to accomplish this purpose.

Still other expedients have taken the form of stationary skid members of a variety of designs which absorb some of the weight of the housing so that the entire weight of

the cleaner device is not applied to the rug through the brush. The use of such skid devices, however, while rendering the device more easily controlled, does not provide a satisfactory solution since the effective cleaning power of the bristles is reduced. Moreover, the effective use of a shampoo device which employs a skid or track type apparatus for restraining movement requires a frequent resetting of the vertical adjustment of the skid device to maintain a balance between the weight applied through the skid and through the bristles. Also, the pile height and type of the carpet will affect the performance of the device so that a different vertical adjustment may be required to maintain sidewise forces within a desired range for treating a loop carpet and a velvet carpet.

Broadly stated, the present improvement relates to a novel rug shampoo device and brush assembly therefor which employs an anti-friction plate which rotates wtih the brush assembly, as opposed to providing a static drag in accordance with the devices heretofore known. The anti-friction plate reduces the tendency of the machine to lurch or slew violently from side to side but nonetheless assures sufficient frictional contact to enable the brush to provide a controllable, gradual side to side movement and thus eliminates the necessity for bodily shifting the cleaner unit across the rug.

Accordingly, it is an object of the invention to provide an improved rug shampoo device and bristle head therefor which will greatly simplify the job of shampooing a rug.

A further object of the invention is the provision of a rug shampoo device which may be easily manipulated so as to enable even a novice to use the same for its intended purpose.

Still a further object is to provide a novel shampoo device, particularly of the single brush type, wherein the device may be moved across a rug through the use of the rotary force of the brush against the rug, but violent and uncontrollable movements of the apparatus across the rug are avoided.

Still a further object of the device is to provide a novel and adjustable brush shampoo apparatus for a rug which is adjustable to permit a range of bristle extension whereby the penetration of the bristles into the rug nap may be controlled and adjusted to accommodate the same for use on various types and heights of rug piles.

A still further object of the invention is the provision of novel adjusting means to compensate for progressive bristle wear, thereby to provide a substantially constant cleaning action throughout the useful life of the bristle members.

To attain these objects and such further objects as may appear herein or be hereinafter pointed out, reference is made to the accompanying drawings forming a part hereof in which:

FIGURE 1 is a perspective view of a brush cleaner apparatus in accordance with the invention;

FIGURE 2 is a magnified, exploded, perspective view of the components of the novel brush head assebly;

FIGURE 3 is magnified diagrammatic cross sectional view showing contact between the undersurface of the shampoo head and the rug, with certain details of construction omitted for clarity;

FIGURE 4 is a fragmentary, magnified section taken on the line 4—4 of FIGURE 1, with portions of the housing omitted;

FIGURE 5 is a magnified section taken on the line 5—5 of FIGURE 4.

In accordance with the invention, there is provided a more or less conventional floor polisher and rug shampoo apparatus 10 with comprises a motor mechanism 11 mounted on a wheeled housing 12. The housing incorporates a control handle 13 which includes the usual

switch means **14** for activating the motor means. A reservoir **15** is provided for holding the shampoo composition, the reservoir incorporating a dispensing tube **16**, the lower end of which terminates directly above the brush head assembly **17**. A valve **18**, located adjacent the handle, enables increments of the shampoo solution to be disposed through tube **16**.

The cleaner device is provided with the usual wheel members **19** to facilitate the transportation of the device when the same is not being operated, conventional mechanism being provided for shifting the wheels clear of the floor when the device is put to its intended use.

Referring now to the drawings and particularly FIGURE 2, there is shown a novel brush head **17** which is secured to the drive transmission of the shampoo apparatus **10**. The assembly incorporates a bristle carrier disk **20**, preferably formed of a cast, non-corroding metal such as aluminum or the like. Supported on and extending beneath the under surface of the disk **20** is an annular, peripherally located series of bristle tufts **21**, the latter being maintained in position in any known manner, such as by forming a medial fold lengthwise of the bristle tufts and by lacing wires through the thus folded tufts and through apertures formed in the disk.

A concentrically oriented series of apertures **22** are formed about the disk, the apertures being located beneath the exit of dispenser tube **16** and functioning to permit fluids dispensed by the tube to pass through the disk to the surface to be cleaned. The disk **20** is provided with a central cutout **23**, having a series of threaded apertures **24** spaced equally about the periphery of the cutout. The disk **20** is additionally provided with a series of stepped spacer members **25**, each said series **25** including a plurality of individual steps **26**, which steps **26** are disposed at varying heights with respect to a horizontal plane through the disk **20**.

In the illustrated embodiment, there are three groups of spacer members **25**, each said group including six steps. Each of the steps is provided with a vertical aperture **27** extending entirely through the disk. A drive connector disk **30** is secured to the disk **20** by bolts **31** passing through apertures **32** formed in the disk **30**, the bolts being threaded into apertures **24** surrounding the cutout portion **23**. Disk **30** is formed with an odd-shaped central cutout **33**, providing a bayonet slot connection with the lowermost end of the drive (not shown) extending from the transmission of the assembly **10**, in a manner well known.

A spacer disk **40** is disposed beneath the disk **20** and within the annular ring of bristle tufts **21**. The spacer disk includes a series of upwardly extending spacer studs **41** which are centrally apertured at **42**, said apertures being threaded. The studs **41** are spaced about the disk **40** so that each one of the studs lies in registry with an aperture **27** formed in a step **26** of a different group of spacer members **25**. Thus, when a stud **41** lies, for instance, in registry with an aperture **27** in the lowermost step **26**, the apertures of each of the other studs will also lie in registry with the aperture of the lowermost step of a different spacer member.

The spacer disk **40** is secured to the disk **20** with the upper edges **43** of the studs **41** in contact with the under surface **29** of the steps **26** by downwardly directed bolts **44** which pass through apertures **27** and are threaded into the bores **42** of the spacer studs (see FIGURE 4). The spacer disk **40** is provided with radially and angularly spaced apart threaded bosses **46**.

An anti-friction plate **50**, having an upwardly directed peripheral flange **51**, is seated over the outer periphery **47** of the spacer disk, the anti-friction plate being secured to the spacer disk by bolts **52** passing upward through apertures **53**, which apertures register with the threaded bosses **46**.

The under surface of the anti-friction plate **50** and the under surface of the spacer disk **40** are formed with cavities **54** and **48**, respectively which, in the attached position of the plate and spacer disk, are nested one within the other, as best seen in FIGURE 4. The depth of the concavity **54** is such as completely to shield the heads of the bolts **52** so that under no circumstances can such bolts engage the rug surface.

As will be best seen from FIGURE 4, the anti-friction plate **50** presents, by reason of the recess or concave portion **54**, a downwardly directed lowermost annular surface **55** surrounding the recessed portion **54**.

The operation of the device will now be described.

With the parts assembled as shown in FIGURE 4, the head assembly **17** is drivingly connected to the downwardly depending transmission output by interconnecting the bayonet slot **33** of connector disk **30** with the complementally formed drive shaft (not shown) of said output.

In advance of mounting the head **17** on the device, the vertical disposition of the anti-friction plate with respect to the lowermost ends E of the bristle tufts is adjusted to orient the lowermost surface **55** of the anti-friction plate at a desired level above the ends E. This adjustment is readily effected by releasing bolts **44** and rotating spacer disk **40** with respect to bristle carrier disk **20** so that the spacer studs are aligned with the steps **26** which are at a level to give the desired vertical spacing.

It will be readily recognized that the proper spacing will depend upon the height of carpet pile to be cleaned and the texture and construction of the carpet. It may be desirable also to provide different adjustments for loop, twist, velvet and cut pile or Wilton-type carpets.

Also, it will be understood that after periods of use, the bristles will become set in a progressively flexed position and will wear to become shorter, each of which constitutes factors possibly requiring an upward readjustment of the level of the plate **50**.

With the plate at the desired level, the device is operated by depressing handle switch **14** of the cleaner assembly, the wheels **19** having been previously shifted upwardly to clear the brush head member **17** from contact with the rug.

As best seen in FIGURE 3, when the head assembly is shifted into contact with the carpet, the weight of the assembly will be supported partly on the now outwardly bowed bristle tufts **21** and partly on the ring **55** of the anti-friction plate. The proportion of the weight of the apparatus carried by these respective parts will, of course, in large part be determined by the vertical adjustment of the plate with respect to the bristle ends. Since at least a significant proportion of the weight of the apparatus is borne by the ring **55**, the coefficient of sliding friction between the head and the rug is relatively low and considerably lower than would be the case if all of the weight were supported on the brush. Side to side and forward and rearward movement are effected in the usual manner by backward and forward tilting of the operating handle **13**.

The brush member **17** is rotated in a clockwise direction in the illustrated embodiment, as represented by the arrow in FIGURE 1. Thus, when the handle **13** is titled rearwardly, a major portion of the weight of the apparatus is placed upon the bristles and ring portions nearest the operator and the apparatus will tend to move from right to left when viewed in the orientation of FIGURE 1.

A converse movement is achieved by tilting the handle away from the operator to emphasize the weight supported by the bristles and ring portions remote from the operator.

In a similar manner, forward and rearward movements may be achieved by applying a slight torque to the apparatus through the handle.

The operator is thus enabled, by the adjustment of the height of the anti-friction plate and bristles and by the amount of downward or upward pressure against the

handle, easily to regulate the movement of the apparatus across the surface of the rug to be cleaned.

The concave under surface **54** of the anti-friction plate, which plate is made of a corrosion resistant metal, acts to contain cleaner fluid which has been dispensed through the dispenser tube **16** in the area beneath the cleaner head. Thus, a considerable concentration of liquid cleaner is always maintained directly in the path of movement of the rotating bristle member by the cup-like containing action of the concave anti-friction plate pressed against the rug (see FIGURE 3).

The maneuverability of the apparatus is a considerable improvement over the maneuverability of devices heretofore known which employ, for instance, a stationary, i.e. nonrotating, central plate disposed within an annular rotating brush. In the latter type of apparatus, the central disk acts as a drag and positively inhibits movement of the apparatus. Where the device is tilted, a progressively greater weight of the apparatus is supported on the brushes and less on the stationary drag plate, with the result that in order to secure a gentle side to side movement, a precise degree of tilting of the apparatus must be maintained. If the unit is tilted beyond such precise degree, a rapid, uncontrollable slewing will result. Contrariwise, if too little tilt is maintained, the device will not move across the surface of the rug due to the drag effect of the stationary parts and must be physically shifted.

Thus, the device of this invention constitutes a great improvement as contrasted with devices hereto known using stationary drag plates or other stationary drag apparatus.

Without limitation thereto, I ascribe, in part at least, the improved operation of my device to the use of the rotating central plate which acts not merely as a weight supporting or drag member, but which additionally acts as a movement inducing member, although of lower coefficient of friction.

While the anti-friction plate in the illustrated embodiment is disclosed to be substantially smooth in the annular floor contacting surface thereof, it will be readily recognized that in certain instances it will be desirable to provide a slight ribbed or fluted configuration to this part, which may augment the cleaning action of the brush and may slightly add to the coefficient of friction, to facilitate shifting movement of the apparatus across the rug.

Having thus described the invention and illustrated its use, what is claimed as new and is desired to be secured by Letters Patent is:

A rug shampoo device comprising a housing having a motor, operating handle means extending from said housing for maneuvering said device, drive means extending below said housing and connected to said motor to be rotated thereby, a brush head including a bristle carrier

portion connected for rotation with said drive means, a ring of bristles carried by and projecting downwardly from said carrier portion and an anti-friction member disposed within said ring of bristles and secured to said carrier portion for rotation therewith, the lowermost surface of said anti-friction member comprising a plate having a flat, annular peripheral portion and a raised circular central portion said annular portion of said member being disposed at a level above the lower ends of the bristles forming said ring, the entire weight of said device, during operation, being supported on said bristles and anti-friction member, the weight on said annular portion of said rotating, anti-friction plate serving to contain fluids within the space defined beneath said central portion, the combination including variable spacer means interposed between said carrier portion and said anti-friction member, said spacer means comprising a plurality of groups of spacer shoulders carried by said carrier member, each shoulder of a group being located at a different predetermined vertical orientation with respect to said carrier member than the vertical orientation of the other shoulders of said group, said shoulders being concentrically disposed about the axis of said carrier member, the shoulders forming each group being spaced apart a predetermined angular amount, said spacer means including combined spacer and drive studs operatively associated with said anti-friction member and spaced to correspond with the spacing of said groups of spacer shoulder, said studs functioning in conjunction with said shoulders to determine the spacing of said carrier and anti-friction member, and to transmit rotary torque from said carrier to said member.

References Cited by the Examiner

UNITED STATES PATENTS

3,011,191	12/1961	Hulsh	15—49
3,107,378	10/1963	Jepson et al.	15—49
3,122,769	3/1964	Doersam	15—246
3,189,930	6/1965	Tuthill	15—320

References Cited by the Applicant

UNITED STATES PATENTS

2,784,433	3/1957	Verhagen.
2,819,478	1/1958	Sutton.
2,819,479	1/1958	Sutton.
2,874,396	2/1959	Smith.
3,019,465	1/1962	Bayless.
3,082,458	3/1963	Nielsen.
3,101,501	8/1963	Horton et al.
3,105,261	10/1963	Tilgner.

CHARLES A. WILLMUTH, *Primary Examiner.*

EDWARD L. ROBERTS, JR., *Assistant Examiner.*