June 5, 1962 R. F. SCHMIDT ET AL 3,037,226

STREET SWEEPING MACHINE

Filed Oct. 13, 1959 4 Sheets-Sheet 1

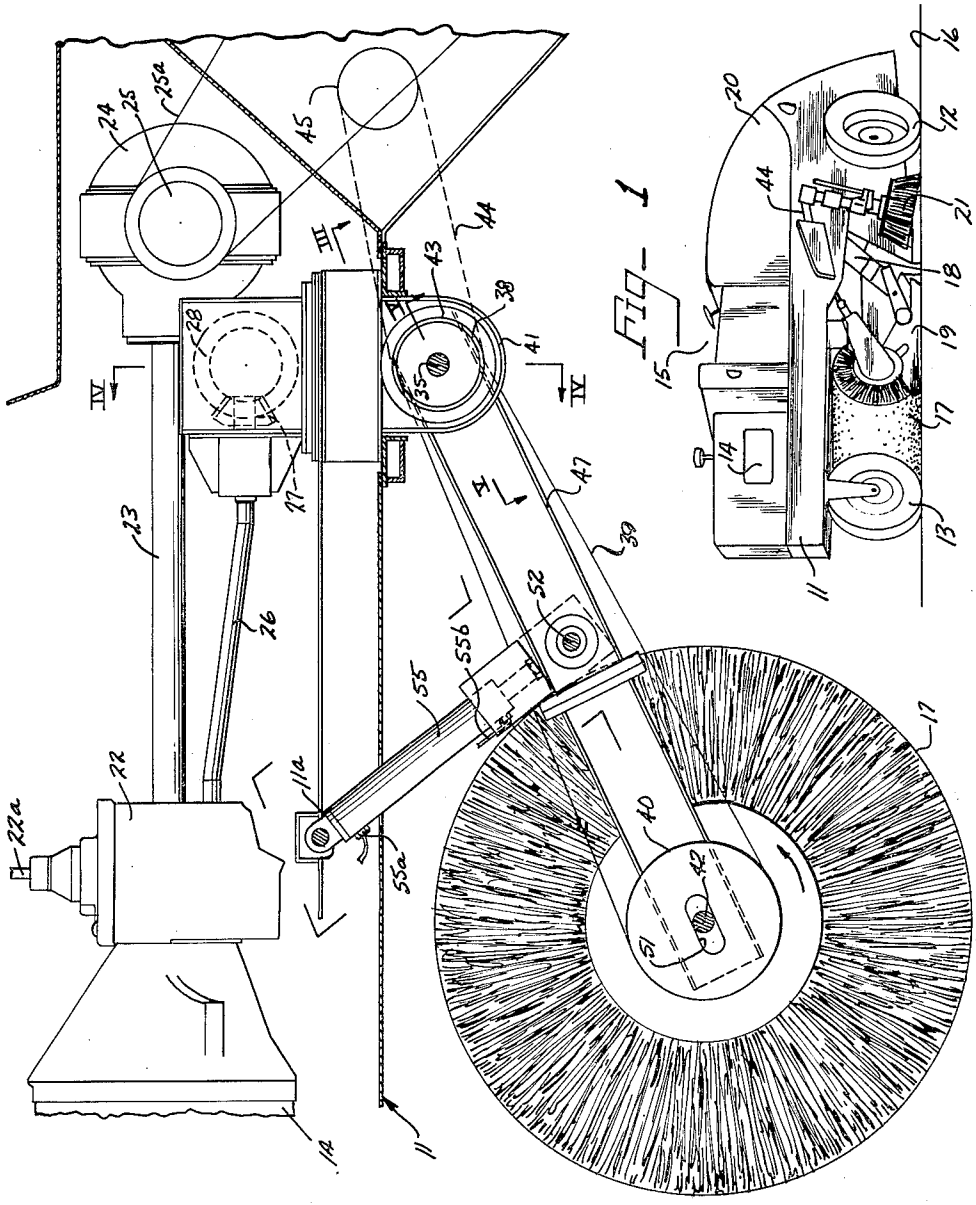

FIG. 2



FIG. 1

Inventors
ROBERT F. SCHMIDT
HENRY A. LEIDECKER

By Hill, Sherman, Meroni, Gross & Simpson Attys.

June 5, 1962 R. F. SCHMIDT ET AL 3,037,226

STREET SWEEPING MACHINE

Filed Oct. 13, 1959 4 Sheets-Sheet 2

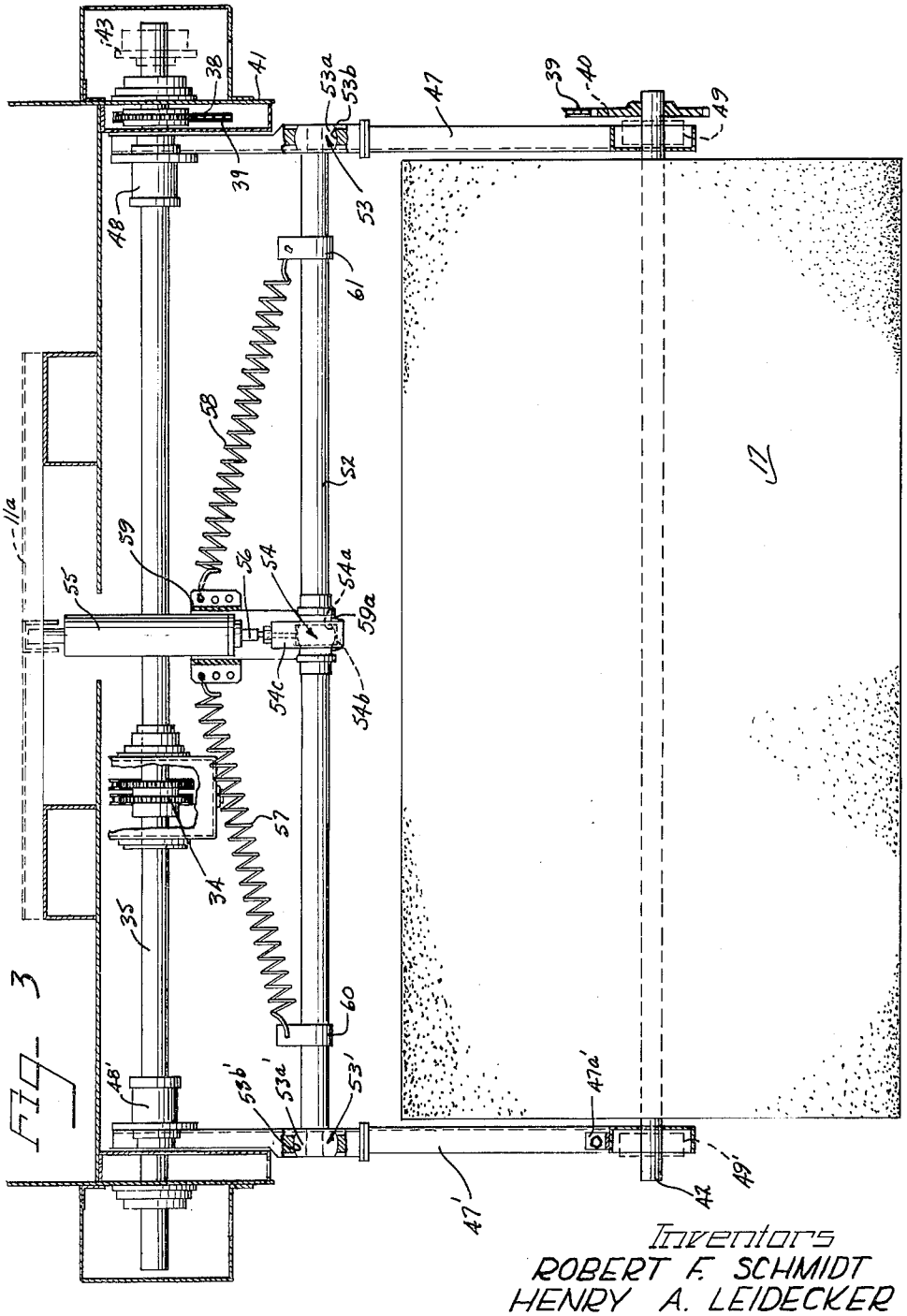


FIG. 3

Inventors
ROBERT F. SCHMIDT
HENRY A. LEIDECKER

by Hill, Sherman, Meroni, Gross & Simpson Attys.

June 5, 1962 R. F. SCHMIDT ET AL 3,037,226

STREET SWEEPING MACHINE

Filed Oct. 13, 1959 4 Sheets-Sheet 3

Fig. 4

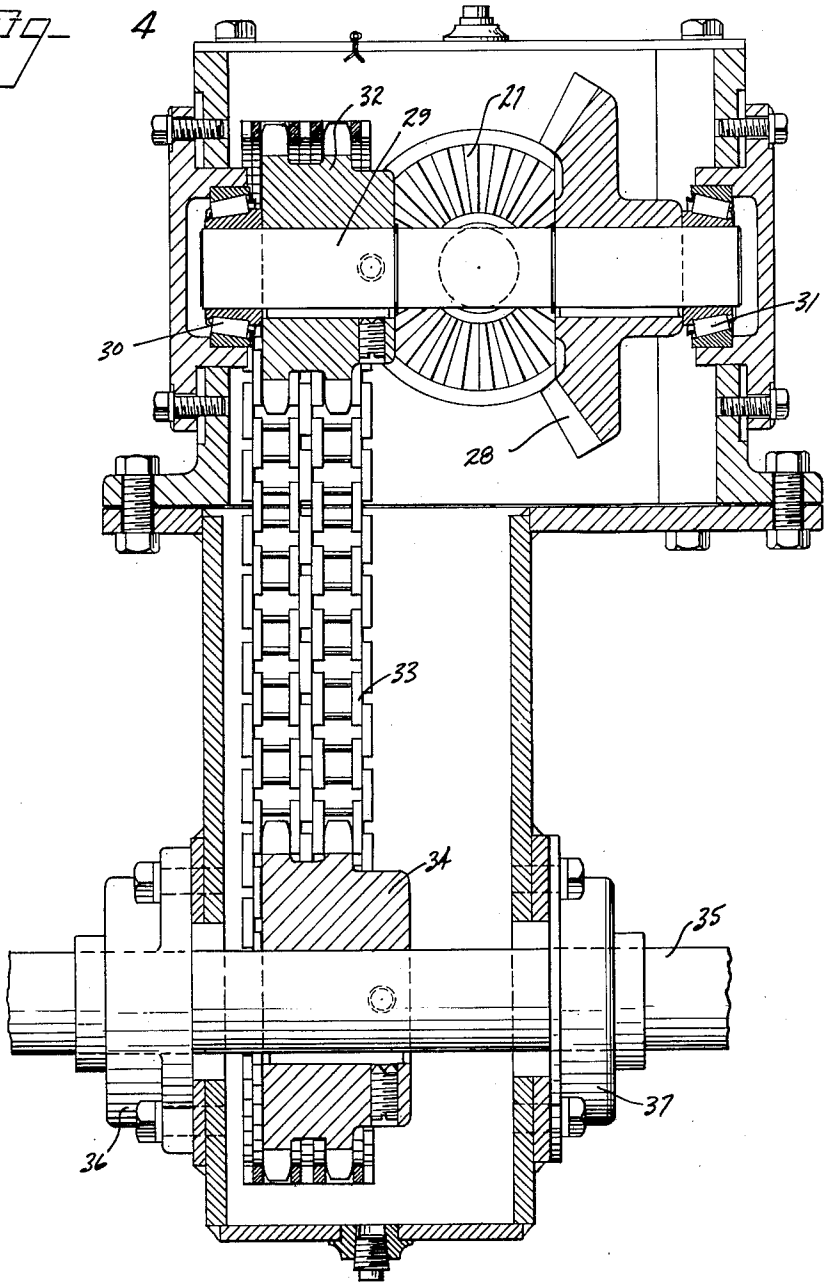


Inventors
ROBERT F. SCHMIDT
HENRY A. LEIDECKER

by Hill, Sherman, Meroni, Gross & Simpson Attys.

June 5, 1962 R. F. SCHMIDT ET AL 3,037,226

STREET SWEEPING MACHINE

Filed Oct. 13, 1959 4 Sheets-Sheet 4

Fig. 5

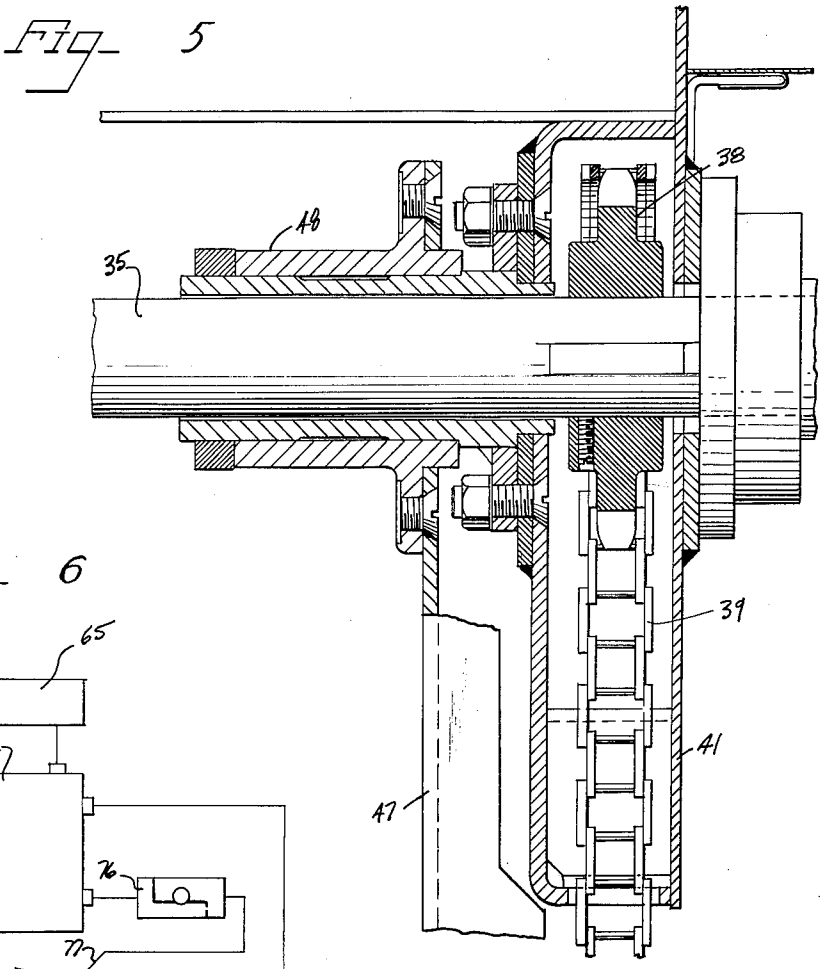


Fig. 6

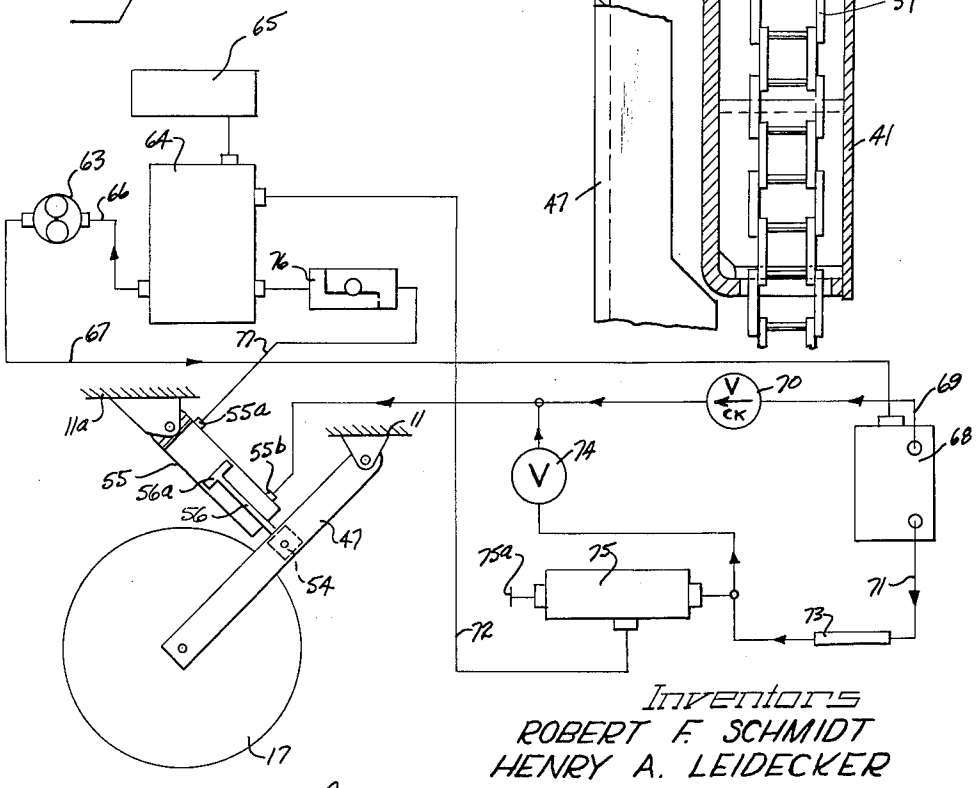


Inventors
ROBERT F. SCHMIDT
HENRY A. LEIDECKER

by Hill, Sherman, Meroni, Gross & Simpson Attys.

United States Patent Office

3,037,226

Patented June 5, 1962



3,037,226

# STREET SWEEPING MACHINE

Robert F. Schmidt, Elgin, and Henry A. Leidecker, Wheaton, Ill., assignors to Elgin Sweeper Company, Elgin, Ill., a corporation of Delaware

Filed Oct. 13, 1959, Ser. No. 846,165

4 Claims. (Cl. 15—82)

The present invention relates to improvements in a sweeping machine and particularly to improvements in mechanism for driving and controlling the main cylindrical rotary broom of a sweeping machine for streets or the like.

In sweeping machines a cylindrically shaped rotary main brush or broom is employed rotatably supported in bearings at its ends and driven in rotation. Various operating factors affect broom operation and sweeping. These factors include changes in conditions requiring heavy or light sweeping as determined by the pressure between the broom and the surface being swept. Wear of the bristles will also affect sweeping conditions. A change in surface elevation or change in the nature of the surface will require change in broom elevation or change in broom pressure.

It is accordingly an object of the present invention to provide an improved mechanism for supporting and controlling a rotary brush or broom for a sweeping machine providing improved control and improved automatic compensating mechanism for change and correction of the above and other conditions encountered in use.

Another object of the invention is to provide a street sweeping machine with a main cylindrical rotary broom with improved counterbalancing means effective on each side of the broom to automatically adjust for broom fiber wear and variations in contour of the surface being swept.

A further object of the invention is to provide a street sweeping machine with an improved cylindrical rotary broom wherein broom bounce is prevented by a control mechanism which permits the broom to move downwardly but retards its upward movement and wherein the broom is raised and lowered hydraulically.

A still further object of the invention is to provide an improved support mechanism for the ends of a rotary cylindrical street sweeping broom.

Other objects and advantages will become more apparent with the teaching of the features of the invention in connection with the disclosure of the preferred embodiments thereof in the specification, claims and drawings, in which:

FIGURE 1 is a perspective view of a street sweeping machine constructed in accordance with the principles of the present invention;

FIGURE 2 is a fragmentary side elevational view of the machine with parts broken away for clarity showing the rotary broom of the machine and the drive mechanism therefor;

FIGURE 3 is a sectional view shown partially in schematic form and taken substantially along line III—III of FIGURE 2;

FIGURE 4 is a vertical sectional view taken substantially along line IV—IV of FIGURE 2;

FIGURE 5 is a sectional view taken substantially along line V—V of FIGURE 2; and

FIGURE 6 is a view shown somewhat in diagrammatic form of the hydraulic control mechanism for the machine.

As shown on the drawings:

FIGURE 1 illustrates a street sweeping machine including a main frame and housing shown generally at **11** ambulantly supported on front drive wheels **12** and a rear steering wheel **13**. The vehicle is propelled and the brooms are driven by an engine **14** controlled by an operator seated in the vehicle at **15**. The machine sweeps a surface **16** of a street or the like and employs a rotary generally cylindrical main broom **17** which is rotatably supported at its ends and driven in rotation. The dirt and foreign materials swept from the street surface are received by a conveyer **18** and carried upwardly to a hopper **20** which is closed by a controlled door so as to be able to dump the dirt at the end of a run or when the hopper is filled. Side shoes **19** are provided at the ends of the main broom to retain the dirt in the path thereof and to prevent streaking. A center dirt deflector is provided, not shown. A rubber runner, not shown, contacts the street preventing the material from being thrown across the path of the machine and out the other side. Another dirt deflector, not shown, is located under the conveyer and this can be removed if necessary during the leaf season and controls gravel stones and the like from being thrown clear of the sweeping path. A side broom **21** is located ahead of the main broom at the side of the machine and is driven through roller chains and sprockets from the engine. Further details of the conveyer **18** and the side brooms **21** are disclosed in our copending applications Serial No. 842,342, filed September 25, 1959, now Patent No. 3,011,193, and Serial No. 849,824, filed October 30, 1959.



The drawings illustrate details of the machine in somewhat schematic form for clarity of description and FIGURE 2 illustrates the engine **14** drivingly connected to a gear transmission **22** provided with a shift lever **22***a* for selecting the driving gear connection through the transmission. A drive shaft **23** leads from the transmission to connect to a differential **24** with lateral drive shafts carrying sprockets **25** to drive a chain **25***a* drivingly connected to drive the front wheels by a mechanism not shown.

Also leading from the transmission is a boom drive shaft **26** connected to a bevel gear **27** in driving mesh with another bevel gear **28**, FIGURES 2 and 4. The driven bevel gear **28** is mounted on a gear shaft **29** supported in end bearings **30** and **31**. The gear shaft **29** carries a double sprocket **32** which drives a chain **33** that is in turn threaded over a double sprocket **34**. The sprocket **34** is carried on a shaft **35** supported in bearings **36** and **37**.

As illustrated in FIGURES 2 and 3, the shaft **35** may extend across the machine and carries a broom drive sprocket **38** which is located in a sprocket casing **41** for a chain **39**. The chain **39** is threaded over a sprocket **40** on a broom shaft **42**. The broom is thus driven in rotation.

The cross drive shaft **35** also carries a sprocket **43** at its outer end for purposes of driving the side broom **21**. As illustrated schematically in FIGURE 2, the sprocket **43** drivingly connects to a chain **44** drivingly threaded over a drive sprocket **45** which is connected to drive the side broom **21** at the side of the machine by a mechanism not shown.

In a machine provided with a single side broom **21**, it is unnecessary to extend the shaft **35** all the way across the machine. However, if a side broom is provided on each side of the machine the shaft can be extended as shown, and another sprocket used to drive the other side broom.

A feature of the mechanism is the support for the broom which automatically adjusts for broom fiber wear, which prevents broom bounce, and generally improves the operating characteristics of the machine. The broom is rotatably supported by separate pivotal arms **47** and **47'**, FIGURES 2, 3 and 5 which are pivotally mounted at their upper ends for pivotal movement coaxial with the axis of the cross drive shaft **35**. For this purpose the arms are supported on bearings **48** and **48'** mounted on the shaft as illustrated in detail in FIGURE 5. Each

of the bearings 48 and 48' pivotally supports its respective arm 47 and 47' so that the arms can independently individually move up and down. At the lower ends of the arms 47 and 47' are broom supporting bearings 49 and 49' which rotatably support the broom shaft 42. The arms 47 and 47' are channel shaped and the bearings 49 and 49' are adjustably slidable in the lower end for take-up of the chain 39. For this purpose, the shaft 42 extends through slots in the ends of the arm which are elongated parallel to the arms, as illustrated by the slot 51 for the arm 47. Counterweights 47*a*' are removably attached to the arm 47' to equalize the weight of the drive mechanism at the other end of the broom.

Extending across between the arms 47 and 47' is a bar 52 which is located between the upper supported ends of the arms and their lower ends. The bar is attached at its ends by ball and socket joints 53 and 53' to the arms with the joint 53 having a ball 53*a* connected to the bar and received in a socket 53*b* on the arm. Similarly, joint 53' has a ball 53*a*' on the bar 52 which is received by a socket 53*b*' in the arm 47'.

The broom is hydraulically controlled as to surface pressure and is hydraulically lifted. For this purpose a cylinder 55 is mounted on a machine frame piece 11*a* and receives a piston 56*a* slidable therein connected to a piston rod 56 which is secured to the bar 52. Control of the movement and the position of the piston within the cylinder 55 is regulated by the flow of hydraulic fluid through suitable connections 55*a* and 55*b*, FIGURES 2 and 6. The piston rod is connected by a ball and socket joint 54 to the bar 52, with the bar 52 having a ball 54*a* received by a socket 54*b* connected to the cylinder.

Equalizing springs 57 and 58 are provided to assure even broom wear from right to left. The equalizing springs are connected at their upper ends to a bracket 59 mounted on the bar 52. The springs extend laterally outwardly and downwardly to connect to brackets 60 and 61 respectively near the ends of the bar 52. The bracket 59 is non-yieldingly supported to provide an anchor for the springs 57 and 58 by extending downwardly and being connected at its lower end 59*a* to a block 54*c* which also contains the socket 54*b*. The block 54*c* is rigidly secured at the lower end of the piston rod 56. Therefore the block 54*c* and its supported bracket 59 are prevented from bending laterally by the fit of the piston rod 56 and its piston in the cylinder 55. In operation, should one end of the broom drop, for example the end shown at the right in FIGURE 3, the right end of the rod 52 will drop increasing the tension in the spring 58 to resist dropping of the broom end. This action tends to stabilize operation of the broom.

This support for the side arms 47 and 47' prevents side rock such as occurs in crowned streets and with wear of the broom.

The hydraulic system for the cylinder 55 and piston 56*a* is illustrated in FIGURE 6. In FIGURE 6 a suitably driven pressure pump 63 for hydraulic fluid receives fluid from a reservoir 64 provided with a breather 65 and the pump is connected to the reservoir by an intake line 66. The pump delivers through a delivery line 67 which connects to a control valve 68. The control valve has suitable operating mechanism, not shown, which directs the pressurized hydraulic fluid through a lift line 69 to the lower end of the cylinder 55 for purposes of lifting the broom 17. A check valve 70 is connected in the lift line 69 preventing return of flow of hydraulic fluid. When the valve 68 is set to the lift position, a hand shutoff valve 74 in a line 71 is also closed and the broom is lifted by fluid flowing through line 69. When the valve 68 is set to the lowering position the hand valve 74 is opened and the broom will be dropped and the fluid will return through pressure control line 71 and return line 72. The pressure control line normally functions to maintain a regulated pressure beneath the piston 56*a* to partially support the weight of the broom 17 and thereby control its surface pressure. The pressure control line 71 has a flow regulator 73 therein. An adjustable relief bleed valve 75 is attached to line 71 and is manually regulated by a valve handle 75*a* to determine the pressure in the pressure control line 71 and accordingly the pressure with which the broom 17 engages the surface being swept. Excess oil from the relief valve 75 flows back to the reservoir through a relief return line 72.

Bouncing of the broom is prevented by a snubbing valve 76 connected in a line 77 leading from the upper end of the cylinder 55 to the reservoir. The snubbing valve restrains the elevation of the broom when encountering an obstacle but permits its free descending return. The snubbing valve permits a free flow from the reservoir 64 and limits the flow back into the reservoir. This causes the application of a snubbing force limiting the speed of ascent of the broom improving its operating characteristics and reducing bounce.

In operation an operator located at 15, as shown in FIGURE 1, lowers the broom by the control valve 68 and hand valve 74, and drives the machine forwardly. The side broom 21 sweeps the dirt from the pavement surface 16 inwardly and the main broom sweeps forwardly and dirt is carried up the conveyer 18. Broom pressure is regulated by the control of the adjustable relief valve 75 which regulates the pressure beneath the cylinder 56*a*. The bounce of the broom is prevented by a snubbing valve 76 which permits a rapid descent of the broom but applies a vertical force to the broom to slow down the ascent. The broom 17 adjusts for wear by being mounted on independent side arms 47 and 47' which are under the influence of equalizing springs 57 and 58.

Thus it will be seen that we have provided an improved street sweeping machine and a rotary main broom and control therefore which meet the objectives hereinbefore set forth. The mechanism is simple and effective in operation and the broom operates in an improved manner automatically compensating for various factors having an effect on operation.

The drawings and specification present a detailed disclosure of the preferred embodiments of the invention, and it is to be understood that the invention is not limited to the specific forms disclosed, but covers all modifications, changes and alternative constructions and methods falling within the scope of the principles taught by the invention.

We claim as our invention:

1. In a street sweeping machine, a first arm pivotally mounted on one side of the machine, a second arm pivotally mounted on the other side of the machine, a cylindrical rotary broom adapted for rotation in sweeping engagement with a street surface rotatably mounted at the lower ends of said arms, means for driving the broom in rotation, a cross bar extending between said arms and pivotally connected thereto at a location spaced between the pivotal mounting of said arms and the broom, and a pair of equalizing springs secured to the machine midway between said arms and extending angularly outwardly and attached at their ends to said bar to apply lateral equalizing forces to the ends of the broom.

2. In a street sweeping machine, a cylindrical rotary broom adapted for rotation in sweeping engagement with a street surface or the like, support bearings at the ends of the broom, means for driving the broom in rotation, a first broom supporting arm at one side of the machine connected to one of the bearings at its lower end and pivotally mounted on the machine, a second broom supporting arm at the other side of the machine connected to the other bearing at its lower end and pivotally mounted on the machine, a cross bar extending across between said arms at a location between the pivotal mounting of said arms and the broom and pivotally connected to each arm with a pivotal connector, a broom elevating member connected to said machine and connected with a pivotal connector to said bar for applying a lifting force to said

arms to elevate the broom, and spring members connected to apply yieldable stabilizing forces between the elevating member and the cross bar.

3. In combination in a street sweeping machine, a cylindrical rotary broom adapted for rotation in sweeping engagement with a street surface or the like, support bearings at the ends of the broom, means for driving the broom in rotation, a first broom supporting arm at one side of the machine connected to one of the bearings at its lower end and pivotally mounted on the machine, a second broom supporting arm at the other side of the machine connected to the other bearing at its lower end and pivotally mounted on the machine, a cross bar extending across between said arms at a location spaced between the pivotal mounting of said arms and the broom, ball and socket joints at each end of said bar connecting the bar to said arms, an elevating mechanism connected to the machine and to said bar at the center thereof, and a ball and socket joint connecting the elevating mechanism to the bar accommodating individual rocking of said arms.

4. In combination in a street sweeping machine, a cylindrical rotary broom adapted for rotation in sweeping engagement with a street surface or the like, support bearings at the ends of the broom, means for driving the broom in rotation, a first broom supporting arm at one side of the machine connected to one of the bearings at its lower end and pivotally mounted on the machine, a second broom supporting arm at the other side of the



machine connected to the other bearing at its lower end and pivotally mounted on the machine, a cross bar extending across between said arms at a location spaced between the pivotal mounting of said arms and the broom, ball and socket joints at each end of said bar connecting the bar to said arms, an elevating cylinder and piston connected to the machine and to said bar at the center thereof, a ball and socket joint connecting the cylinder and piston to the bar accommodating individual rocking of said arms, and a pair of equalizing springs mounted at their upper ends above the bar and extending laterally outwardly and connected at their lower end to said bar to apply a counterbalancing equalizing force to the arms.

**References Cited** in the file of this patent

UNITED STATES PATENTS

| | | |
|---|---|---|
| 548,200 | Hvass | Oct. 22, 1895 |
| 599,937 | Jones et al. | Mar. 1, 1898 |
| 1,286,481 | Woodin | Dec. 3, 1918 |
| 1,452,735 | Haworth | Apr. 24, 1923 |
| 2,199,703 | Hough | May 7, 1940 |
| 2,238,716 | Wells | Apr. 15, 1941 |
| 2,278,306 | Cushman et al. | Mar. 31, 1942 |

FOREIGN PATENTS

| | | |
|---|---|---|
| 306,834 | Great Britain | May 8, 1930 |
| 695,207 | Great Britain | Aug. 5, 1953 |