June 6, 1939. M. N. NOLING 2,161,633

WARP-UNITING MACHINE

Filed July 21, 1937 2 Sheets-Sheet 1

Fig. 1.

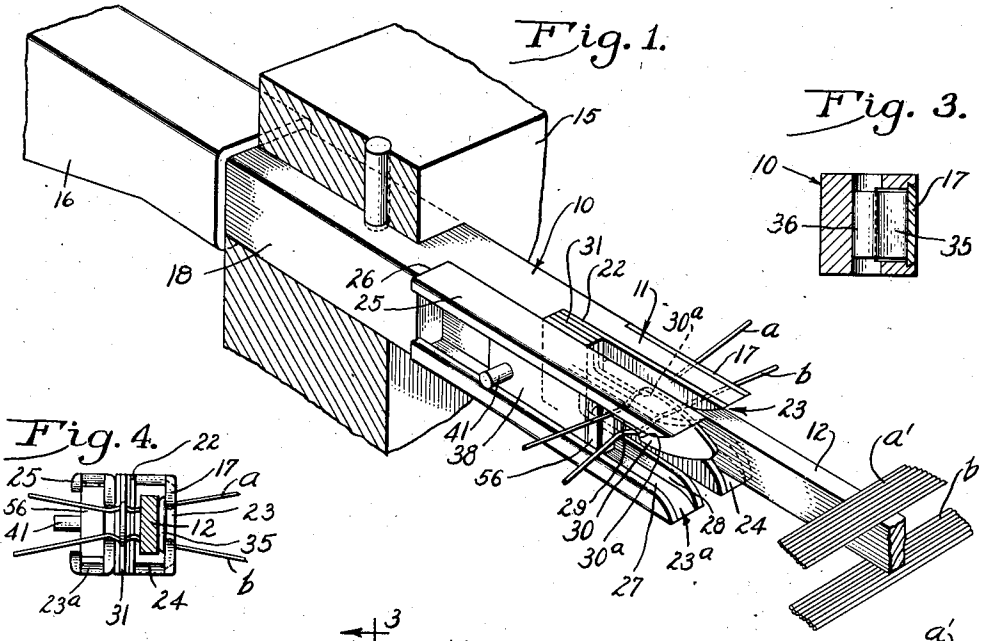

Fig. 3.

Fig. 4.

Fig. 2.

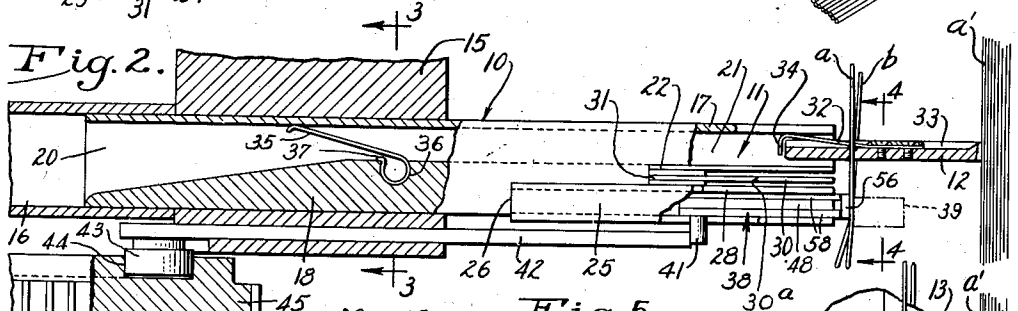

Fig. 5.

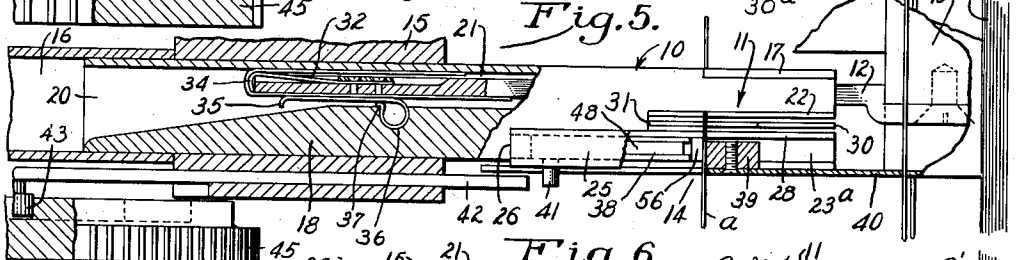

Fig. 6.

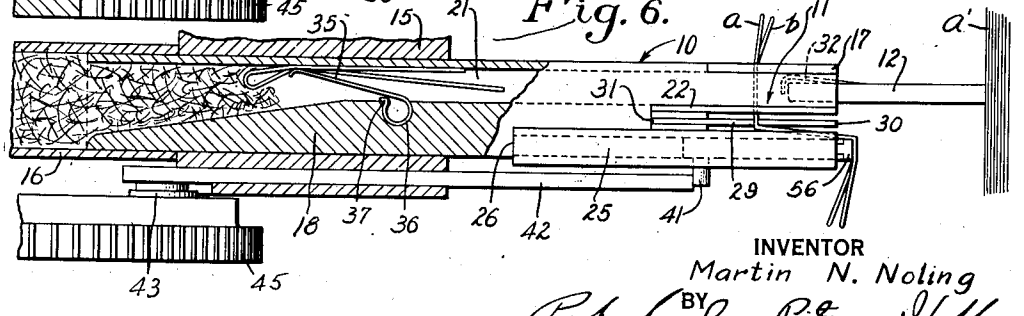

INVENTOR
Martin N. Noling
BY
Parker, Carlson, Pitzner & Hubbard
ATTORNEYS

June 6, 1939. M. N. NOLING 2,161,633

WARP-UNITING MACHINE

Filed July 21, 1937 2 Sheets-Sheet 2

Fig. 7.

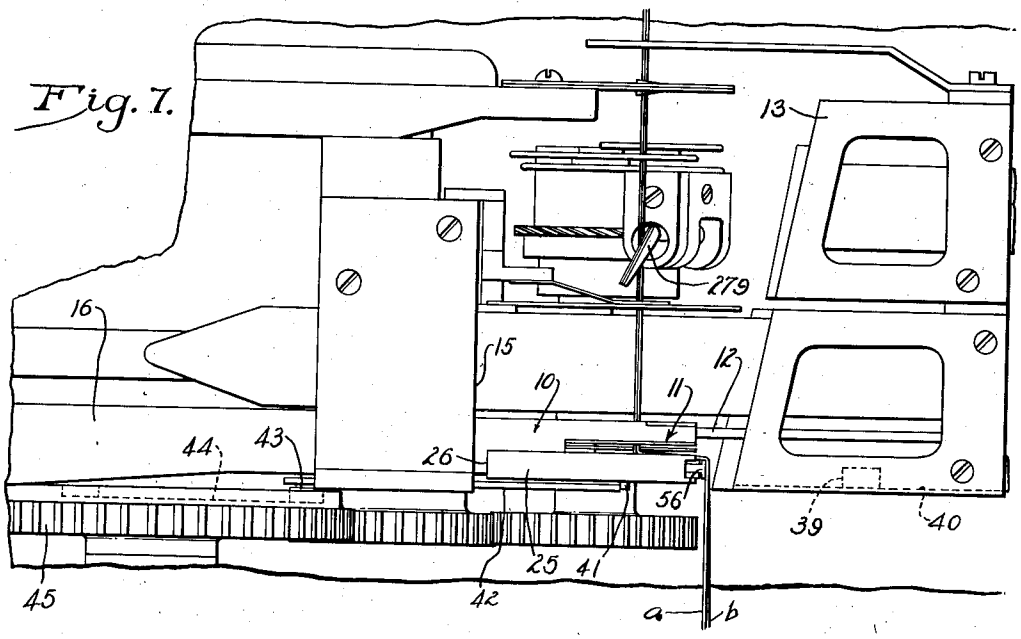

Fig. 8.

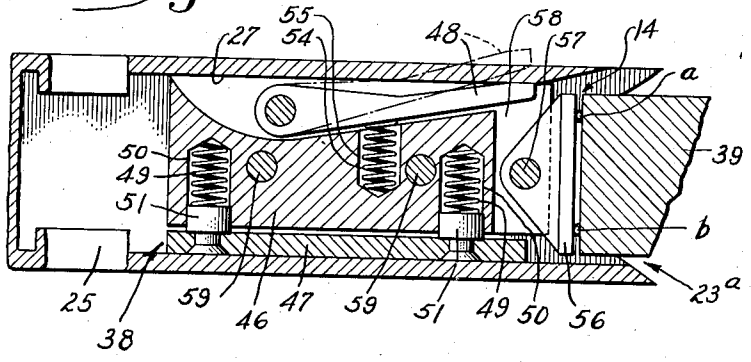

INVENTOR
Martin N. Noling
BY
Parker, Carlton, Pilgrim & Hubbard
ATTORNEYS

Patented June 6, 1939 2,161,633

UNITED STATES PATENT OFFICE

2,161,633

WARP-UNITING MACHINE

Martin N. Noling, Rockford, Ill., assignor to Barber-Colman Company, Rockford, Ill., a corporation of Illinois

Application July 21, 1937, Serial No. 154,786

17 Claims. (Cl. 28—49)

The invention pertains to warp-uniting machines, and has particular reference to an improved mechanism for disposing of the waste thread ends resulting from the operation of the uniting mechanism.

One object of the invention is to provide a mechanical ejector mechanism for the waste ends, which is of a simple and inexpensive construction and reliable in operation.

A further object is to provide in combination with a waste-end ejector mechanism, an improved form of clamp cooperating in the operation of uniting the ends and in the disposal of the waste ends after the threads have been united.

The objects of the invention thus generally stated together with other and ancillary advantages are shown by the construction and arrangement illustrated in the accompanying drawings forming part thereof in which

Figure 1 is a fragmentary perspective view of the combined ejecting and clamping mechanism for the waste ends of the threads.

Fig. 2 is a fragmentary longitudinal plan section through the mechanism.

Fig. 3 is a transverse sectional view taken approximately in the plane of line 3—3 of Fig. 2.

Fig. 4 is a transverse sectional view taken approximately in the plane of line 4—4 of Fig. 2.

Figs. 5 and 6 are fragmentary longitudinal sectional views similar to Fig. 2 but showing the parts in different positions.

Fig. 7 is a fragmentary plan view of the uniting mechanism of a warp-tying machine embodying the invention.

Fig. 8 is a fragmentary longitudinal sectional view showing the construction of the thread clamping means.

The improved ejecting and clamping mechanism is particularly adapted for use in a warp-tying machine of the type disclosed in the patent to Burt A. Peterson No. 2,011,115, dated August 13, 1935. As set forth in said patent two warps are supported one above the other and through the operation of a selector mechanism the two threads to be united are separated from their respective warps and presented to a tying mechanism. The latter includes a tying bill 279 (Fig. 7) having a shear operative to sever the threads, and the selector mechanism (not herein shown) also includes shearing means so that each of two threads being united is severed at spaced points to form short pieces of thread. Herein these short pieces or waste ends are designated *a* and *b* and the present invention has to do with the provision of improved means for effecting the disposal of such thread ends. In the present embodiment of the invention said means comprises generally a tube 10, rectangular in cross section, having at its forward end a thread receiving and tensioning grid 11. A stripper bar 12 is reciprocable longitudinally of the tube 10 into engagement with the thread ends *a* and *b* after they have been severed by the shear associated with the selector mechanism, and by the knot-tying bill 279 of the knotter mechanism (Fig. 7). 13 designates a slide forming part of the mechanism for advancing the threads to be united to the knotter mechanism. This slide is utilized to actuate the stripper bar 12, and also to actuate a thread-clamping means generally designated 14 (Fig. 5) for clamping the threads *a* and *b* during the thread uniting or tying operation and for carrying the threads into position in the grid 11.

The tube 10 is stationarily mounted in a supporting bracket 15 and communicates at its rear end with a tubular receptacle 16 adapted to receive the waste ends. One side wall of the tube is formed by a plate 17 having a dovetailed sliding connection with the adjacent walls of the tube as shown in Fig. 3 so as to permit of removal of this plate for purposes of gaining access to the interior of the tube. Opposite the plate 17 the tube has a relatively heavy side wall 18 which gradually decreases in thickness toward the rear end of the tube so as to form an outwardly and rearwardly flaring passage 20 communicating with the waste receptacle 16. Forwardly of the flaring passage 20 the tube provides a relatively narrow passage 21 into which the waste ends are thrust by the operation of the stripper bar 12 and carried rearwardly by the bar to the flaring passage 20. The relatively heavy side wall 18 of the tube terminates short of the forward end of the tube and the forward portion of the passage 21 is closed by a plate 22.

In forming the grid 11 the plates 17 and 22 are bifurcated as shown in Fig. 1, thereby providing a throatway 23 the opposite sides of which are channel-shaped as indicated at 24 in Figs. 1 and 4. These channeled portions are adapted to guide the rear end of the stripper bar 12 in its rearward movement. While the grid is in part formed integral with the walls of the tube, it may be made separately.

The grid further includes a block 25 secured to the side wall 18 of the tube which is suitably recessed for this purpose as indicated at 26. The forward end portion of the block provides an ad-

ditional throatway 23a. Thus the block is bifurcated and shaped to form opposing channels 27 connected by a web 28 at the side of the block adjacent the tube. The portions of the grid forming the channels 24 and 27 are spaced apart laterally and midway between them is mounted an additional or central grid member having a narrow shank 29, an enlarged head 30 with rearwardly facing shoulders 30a, and a rear end portion 31 clamped between the plate 22 and the block 25, with intervening spacer blocks.

The stripper bar 12 is carried by the thread advancing slide 13 (Fig. 5) so as to be actuated by the slide, with a straight reciprocatory motion, as an incident to the operation of the slide in presenting threads to the knotter mechanism. In each operation of the slide, one pair of threads is advanced to the knotter mechanism and the waste ends formed in the previous thread-uniting cycle are engaged by the stripper bar and carried rearwardly into the tube 10. Preferably the stripper bar carries a spring finger 32 having one end secured in a shallow recess 33 formed in one face of the bar and its other end bent as at 34 into overlying relation to the rear end of the bar as shown clearly in Fig. 2. For coaction with the bar 12 in retaining the thread ends in the rear portion of the tube 10, a leaf spring 35 is provided within the rear portion of the tube. This spring 35 has a curled forward end 36 seated in a recess formed in the wall 18 of the tube at the rear end of the relatively narrow passage 21, and the spring proper extends rearwardly into the flaring passage 20 with its free end yieldably engaging the opposite side wall of the tube formed by the plate 17. The spring is anchored as indicated at 37 so as to hold the arm 35 thereof outwardly against the wall of the tube formed by the plate 17.

The thread-clamping means 14 comprises a movable rear clamping member or traveler 38 slidable within the opposed channels 27 of the grid, and a forward clamping block 39 carried by an arm 40 attached to the slide 13 (Fig. 5). The traveler 38 carries a laterally projecting stud 41 adapted for engagement by the forward end of a slide 42 carrying a roller 43 for coaction with a cam groove 44 cut in one face of a suitably driven gear 45. The slide 42 is mounted for front to rear sliding movement in the bracket 15 and the arrangement is such that the traveler is moved forwardly for coaction with the clamping member 39 preliminary to each thread-clamping operation.

Rearward movement of the thread-clamping traveler 38 with the clamping member 39 is frictionally retarded by a spring actuated brake incorporated in the traveler. For this purpose the traveler comprises, as shown in Fig. 8, a block 46 yieldably mounted upon a base plate 47 and carrying a brake lever 48. To support the block 46 yieldably upon the base plate 47, coiled compression springs 49 are inserted in recesses 50 in the block and bear against cylindrical abutments 51 engaging in the recesses 50 and riveted to the base plate 47. The upper side of the block is recessed at 53 to receive the brake lever 48, which latter is forced upwardly against the top wall of the upper channel portion 27 of the block 25 by a spring 54 seated in a recess 55.

To provide a clamping surface for the traveler adapted to compensate for threads of different thicknesses, a clamping shoe 56 is provided. This shoe is pivoted at 57 between two plates 58 which are secured to the opposite sides of the block 46 as by means of pins 59.

In the operation of the machine, the thread *a* having been selected from the upper warp *a'* and the thread *b* having been selected from the lower warp *b'* are clamped by the selector mechanism (not shown) at a point spaced laterally to the left of the ejector and clamping mechanism as shown in Fig. 1. The slide 13 thereupon travels rearwardly and advances the threads toward the knotter mechanism. In such operation, the clamping member 39 engages with the threads and clamps the same against the yieldable traveler 38 whereupon the threads are severed by the shearing devices associated with the selector mechanism.

As the clamping members move rearwardly, the threads are carried into the throatways 23 and 23a (Fig. 5) so as to be positioned in proper alinement with the knotter, and in the operation of the latter the threads are drawn through the clamp. Due to the fact that the entire clamp moves rearwardly with the slide to carry the threads into the throatways 23 and 23a, the only resistance to slippage of the threads in the operation of the knotter is imposed by the clamp itself so that breakage of the threads is minimized.

As shown in Fig. 1, the threads *a* and *b*, while being carried rearwardly, are separated slightly in a vertical direction and are respectively slid over the upper and lower sides of the enlarged head 30 of the central grid member and into position at opposite sides of the shank 29. As shown in Fig. 2, the stripper bar 12 in this operation moves rearwardly between the threads *a* and *b*, the stripper being ineffective in this initial cycle. Preparatory to the execution of the succeeding cycle, the stripper bar is withdrawn from between the threads *a* and *b* to the position shown in Fig. 6 and the clamping member 39 moved forwardly with the slide 13 to release said threads. Thereafter the clamping traveler 38 is moved to its forward position (Fig. 6) by the operation of the slide 42. In the forward movement of the stripper bar the thread ends are retained in the grid, the threads engaging with the shoulders 30a of the central grid member on opposite sides of the shank 29 and in position for engagement by the relatively wider stripper bar.

In the succeeding cycle, during which another pair of threads is being presented to the knotter mechanism, the waste ends of the threads *a* and *b*, having been released by the forward movement of the clamping member 39 in the previous cycle, are engaged by the stripper bar 12 and carried rearwardly into the narrow passage 21, and in the latter part of the rearward movement of the bar the clamping member 39 moves into engagement with the traveler 38 to clamp and position the threads to be tied in this operating cycle. In the ejecting movement of the waste ends of the threads *a* and *b* they are looped over the ends of the stripper bar as shown in Fig. 5. In such movement, the spring finger 32 presses the threads lightly against the plate 17 forming the side wall of the tube, and near the end of the stroke, the spring arm 35 is engaged and depressed as shown in Fig. 5. In the withdrawal of the stripper, the spring finger 32 and the spring arm 35 coact to prevent withdrawal of the threads from the tube, the arm 35 moving after the initial portion of the withdrawing stroke into clamping engagement with the looped thread ends as shown in Fig. 6.

As shown in Fig. 6, the thread ends resulting from the successive operating cycles accumulate in the rear end of the tube 10 and in the receptacle 16 and are gradually forced rearwardly therein for final disposal in any suitable way.

It will be observed that the mechanism employed is relatively simple in construction so as to be susceptible of manufacture at a low cost. Moreover, it has been found to operate more positively and with less thread breakage than prior mechanisms, particularly in the case of machines handling threads of rayon, celanese and the like.

I claim as my invention:

1. In a warp-tying machine, an elongated tube having an open end, a reciprocatory bar movable axially within said tube, a knotter operative to tie a pair of threads together and trim off the ends thereof, means for advancing to said knotter two threads to be united with the threads disposed respectively on opposite sides of said bar, and means for actuating said bar to withdraw it from between the threads and, upon the severance of the threads by the knotter, into engagement with the waste ends thereof to carry them into the tube.

2. In a warp-tying machine, an elongated tube having an open end, a reciprocatory bar movable axially within said tube, a knotter operative to tie a pair of threads together and trim off the ends thereof, means for advancing to said knotter two threads to be united with said threads disposed respectively on opposite sides of said bar, a grid carried by the tube at the open end thereof for receiving said threads as an incident to their advance to the knotter, and means for actuating said bar to withdraw it from between the threads while the latter are positioned in said grid, said means being further operative upon the severance of the thread ends by the knotter to move the stripper bar into engagement with said ends and carry them into said tube.

3. In a warp-tying machine, an elongated tube having an open end, a reciprocatory bar movable axially within said tube, a knotter operative to tie a pair of threads together and trim off the ends thereof, means for advancing to said knotter two threads to be united with the threads disposed respectively on opposite sides of said bar, and means for actuating said bar to withdraw it from between the threads and, upon the severance of the threads by the knotter, into engagement with the waste ends thereof to carry them into the tube, the means for presenting the threads to the knotter comprising a pair of clamping members movable with said bar and operative while the waste ends of one pair of threads are being carried into said tube to carry into alinement with the knotter the succeeding threads to be united.

4. In a warp-tying machine, an elongated tube for receiving the waste ends of threads which have been united, a reciprocatory actuating slide, means actuated by said slide for positioning at one end of the tube the threads to be united, a knotter for tying the threads and trimming off the ends thereof, and an axially movable stripper bar projecting from said slide and adapted to engage with the waste ends, said bar being operative in the movement of the slide to carry said ends into the rear portion of the tube.

5. In a warp-tying machine, a knotter operative to tie a pair of threads together and trim off the ends thereof, means for presenting the threads into operative relation to said knotter comprising a reciprocatory slide, a clamp having a pair of clamping members both movable with the slide, and means actuated by the slide upon the severance of the waste ends of the threads formed in the operation of said knotter to engage and effect the disposal of said waste ends.

6. In a warp-tying machine, an elongated tube having an open end, a reciprocatory actuating slide, a clamp having a pair of members movable with the slide and operative to carry a pair of threads to be united into a position at said open end of the tube, a knotter for tying the threads and trimming off the ends thereof, and a stripper bar carried by said slide and reciprocable therewith so as to be movable first into position forwardly of the thread ends and thence rearwardly in said tube to carry the thread ends into the tube.

7. In a warp-tying machine, a knotter operative to tie and trim off the ends of a pair of threads, a grid for receiving said threads to position them in alinement with the knotter, said grid having a channel-shaped support, a clamping member mounted for movement in said support, means for frictionally retarding the movement of said clamping member in said support, a second clamping member movable in said support to carry the threads first into engagement with the first clamping member and thence rearwardly while held by the clamping members into position in said grid, and means for moving the first clamping member forwardly preparatory to the succeeding operation.

8. In a warp-tying machine, a knotter operative to tie a pair of threads together and trim off the ends thereof, means for presenting the threads to said knotter comprising a grid having a throatway for the reception of the threads, a clamping member carried by said grid and movable relative thereto, means for positioning said clamping member forwardly on said grid, and a second clamping member mounted for reciprocation relative to said grid and movable into engagement with the threads to clamp them frictionally against said first clamping member with the two clamping members moving in unison to position said threads relative to the knotter.

9. In a warp-tying machine, a knotter operative to tie a pair of threads together and trim off the ends thereof, and means for positioning the threads relative to said knotter comprising a pair of clamping members, one of said members having a clamping shoe mounted thereon for pivotal movement to compensate for differences in the thicknesses of the two threads.

10. In a warp-tying machine, an elongated tube having an open end for receiving the waste ends of threads which have been united, a grid at said open end of the tube for supporting said ends, said grid having a pair of throatways spaced apart laterally and a member disposed centrally between said throatways and providing shoulders spaced from said open end of the tube, means for carrying said thread ends into said throatways and beyond said shoulders, and a stripper bar reciprocable in said tube and movable from within the tube to a position forwardly thereof and thence rearwardly into engagement with the thread ends to carry them into the tube.

11. In a warp-tying machine, an elongated tube having a forward open end, for receiving the waste ends of threads which have been united, a stripper bar reciprocable axially within the tube and operative to carry said waste ends through said open end rearwardly therein, said tube hav-

ing a grid for positioning said ends of the thread at said open end of the tube, and means for reciprocating said bar to move it first forwardly of the threads and then into engagement with the thread ends to carry them rearwardly into the tube.

12. In a warp-tying machine, an elongated tube for receiving the waste ends of threads which have been united, a reciprocatory slide, a bar fixed on said slide and disposed for movement axially in said tube from and toward a position externally of one end of the tube, means at said end of the tube for receiving and supporting the thread ends, and means for reciprocating the bar to move it into engagement with the thread ends and carry them into the tube with the ends looped about the end of the bar, said thread-supporting means comprising a channel-shaped member for guiding said bar when positioned externally of the tube.

13. In a warp-tying machine, an elongated tube for receiving the waste ends of threads which have been united, a reciprocatory slide, a bar projecting from said slide, means for positioning the thread ends at one end of the tube, and means for imparting ejecting and withdrawing strokes to said bar successively, the bar being movable in its withdrawing stroke to a position such that the thread ends are disposed between the end of the bar and the open end of the tube, and being operative upon the ejecting stroke to engage the thread ends and move the same into the tube with the threads looped around the end of the bar.

14. In a warp-tying machine, an elongated tube having an open end for receiving the waste ends of threads which have been united, and means for carrying said ends into the tube comprising a bar reciprocable axially within the tube, said bar having a spring finger secured thereto and overlying the end of the bar, said finger being adapted to press the threads against the tube in their movement rearwardly in the tube.

15. In a warp-tying machine, an elongated tube for receiving the waste ends of threads which have been united, a stripper bar reciprocable axially within the tube to carry said waste ends thereinto, said bar having a device yieldably pressing the threads against one wall of the tube with the thread ends forming a loop about the end of the bar, and said tube having a spring member coacting with said bar to clamp the looped threads in the tube upon the endwise withdrawal of the bar.

16. In a warp-tying machine, an elongated tube for receiving the waste ends of threads which have been united, a stripper bar reciprocable axially within the tube to carry said waste ends into the tube, said bar having a device yieldably pressing the threads against one wall of the tube with the thread ends forming a loop about the end of the bar.

17. In a warp-tying machine, an elongated tube for receiving the waste ends of threads which have been united, said tube having an open forward end, a stripper bar reciprocable axially within the tube and operative to carry said waste ends through said open end rearwardly into the tube, and means coacting with said bar in its reciprocation to retain the waste ends of the threads in the tube.

MARTIN N. NOLING.