US 20100011829A1

(19) United States

(12) Patent Application Publication

Truong et al.

(10) Pub. No.: US 2010/0011829 A1

(43) Pub. Date: Jan. 21, 2010

(54) **ROLL-FORMING MACHINE FOR FORMING SMOOTH CURVES IN PROFILED PANEL SECTIONS AND METHOD OF FORMING CURVED PANELS**

(75) Inventors: **Minh Truong**, Wellington (CA); **Jacek Opielka**, Mississaunga (CA); **Vinod Kumar**, Brampton (CA)

Correspondence Address:
VIDAS, ARRETT & STEINKRAUS, P.A.
SUITE 400, 6640 SHADY OAK ROAD
EDEN PRAIRIE, MN 55344 (US)

(73) Assignee: **Metform International Ltd.**, Mississaunga (CA)

(21) Appl. No.: **12/438,215**

(22) PCT Filed: **Aug. 17, 2007**

(86) PCT No.: **PCT/CA07/01434**

§ 371 (c)(1), (2), (4) Date: **Feb. 20, 2009**

(30) **Foreign Application Priority Data**

Aug. 23, 2006 (CA) 2557013

Publication Classification

(51) **Int. Cl.**
B21D 13/04 (2006.01)

(52) **U.S. Cl.** **72/180**; 72/181; 72/379.6

(57) **ABSTRACT**

A roll-forming machine for forming smooth curves in profiled panel sections. The roll forming machine has opposed pinch pass rollers having a roller profile generally corresponding to said profiled panel and a pair of cantilever rollers downstream of said pinch pass rollers. The cantilever rollers have axes of rotation that are offset relative to one another in the direction of travel of the profiled panel through the machine and having a roller profile also generally corresponding to the profiled panel. At least one sweep roller is positioned downstream of the cantilever rollers for bending said panel in a longitudinal direction as said panel passes past said sweep roller. The sweep roller also has a roller profile generally corresponding to the profiled panel. The at least one sweep roller can be positioned to the degree of bend of the smooth curve formed in said profiled panel by the machine.

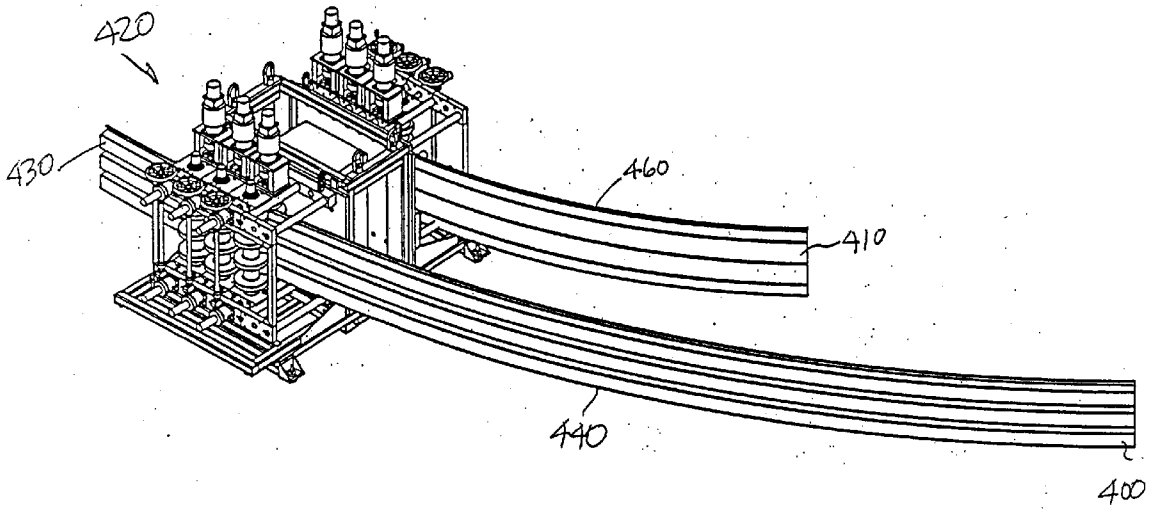

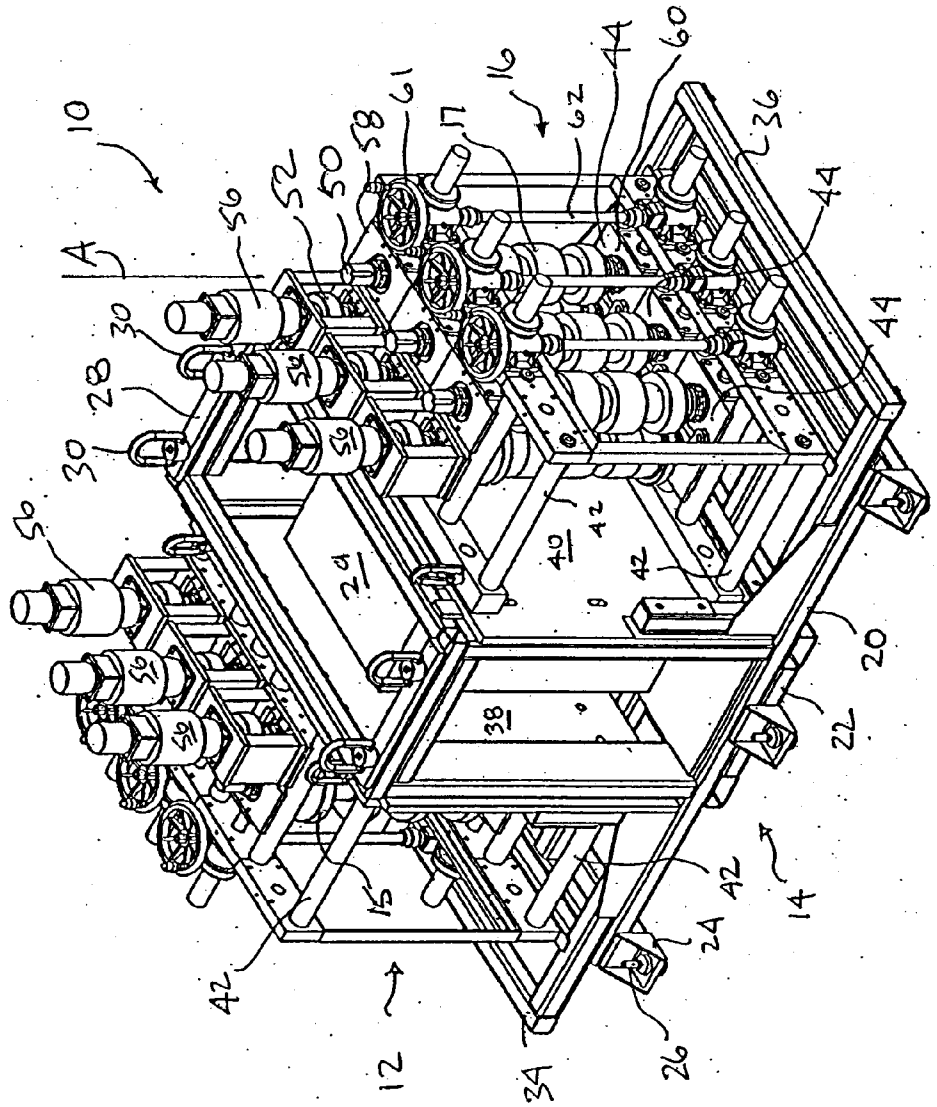
10
A
56
52
50
58
61
17
16
62
44
60
36
44
44
30
28
30
52
52
50
50
50
50
21
40
42
42
20
22
38
42
14
24
42
15
42
12
34
26

Figure 1

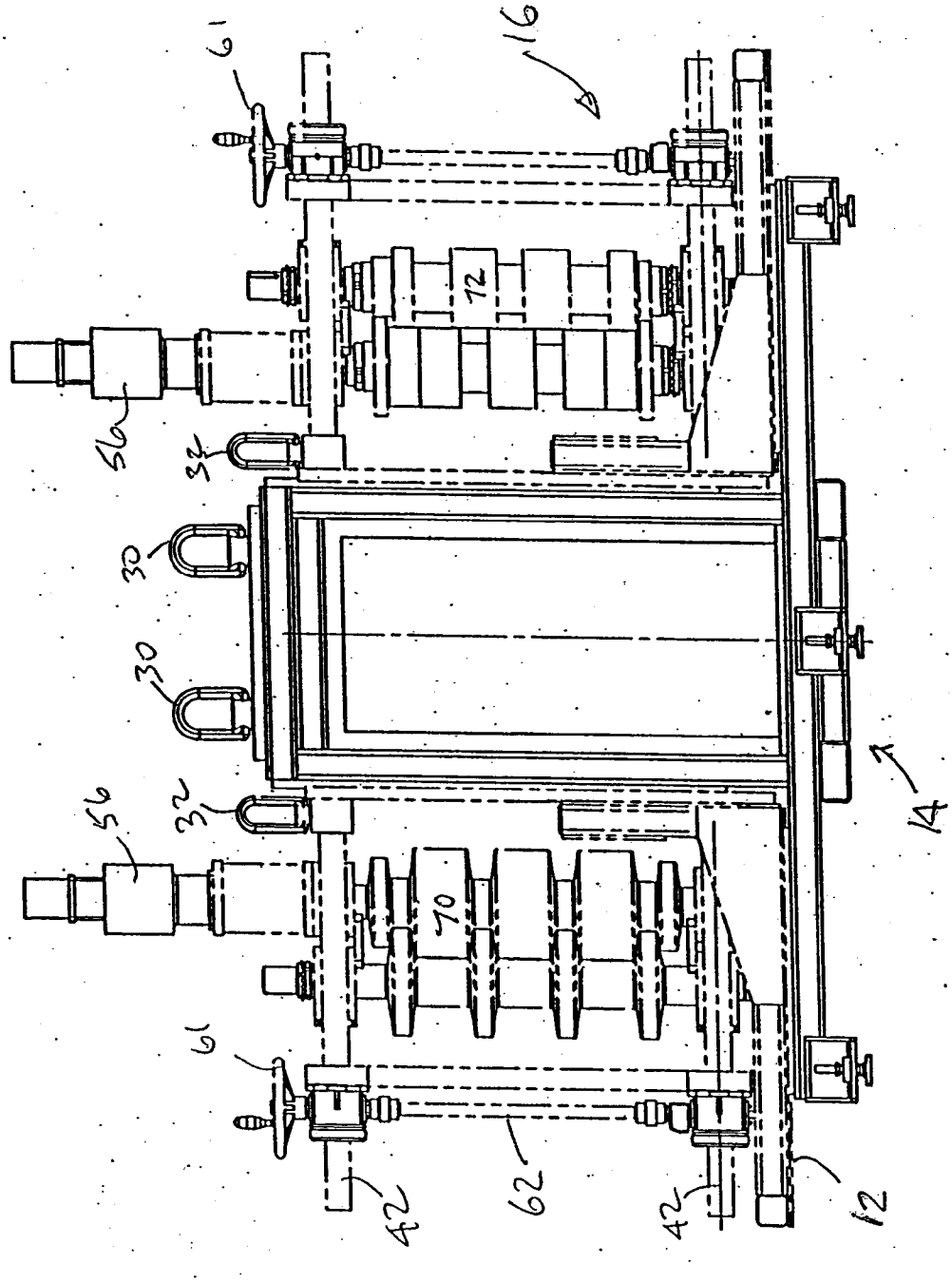

Figure 2

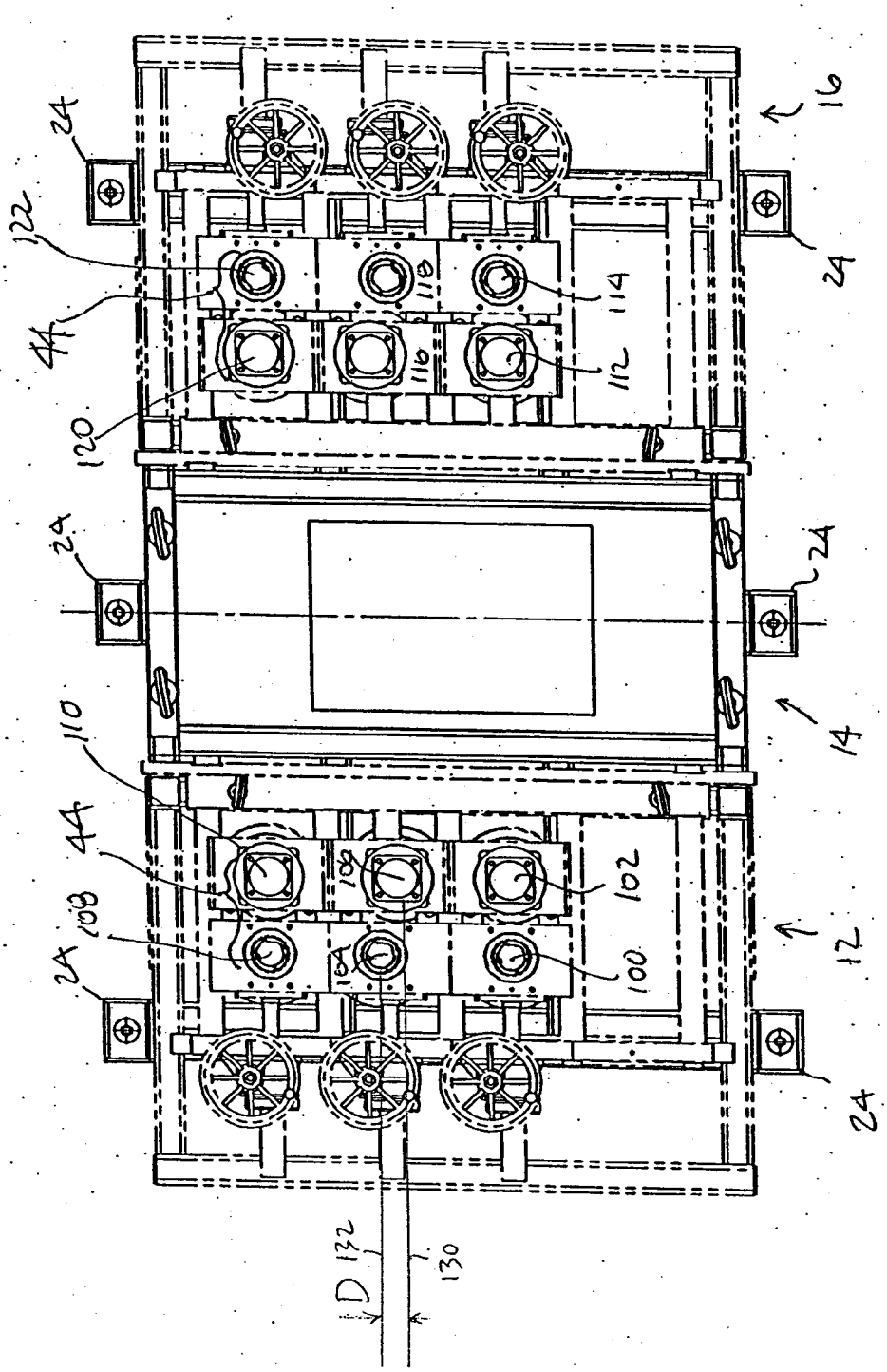
16
24
122
44
120
118
114
116
112
24
24
14
110
44
108
104
102
100
12
24
24
D 132
130

Figure 3

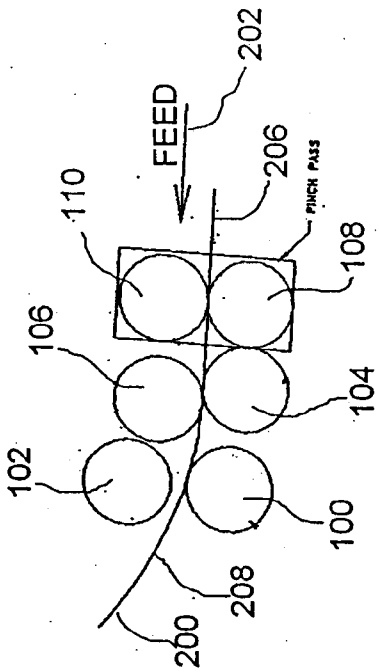

Figure 4b

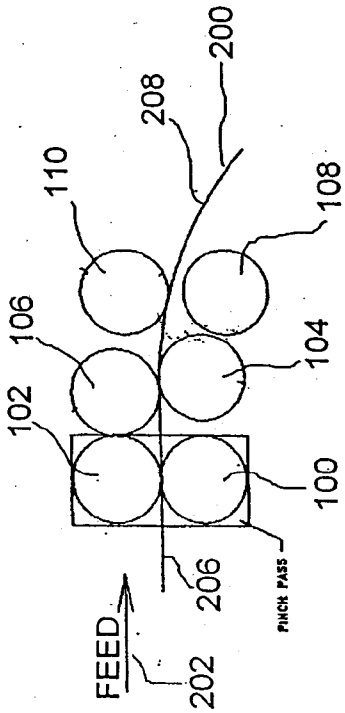

Figure 4a

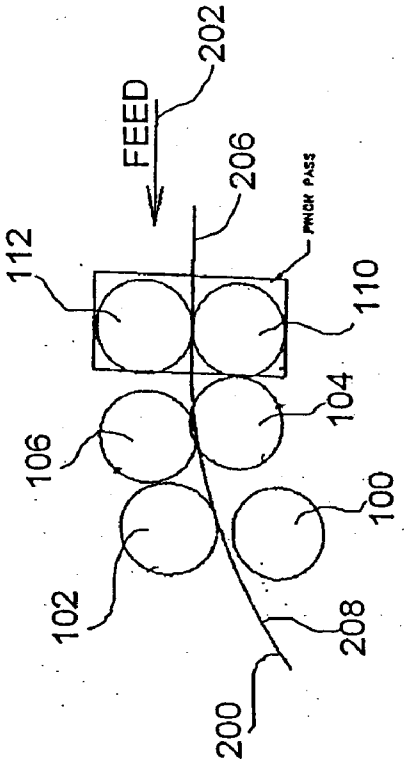

Figure 5b

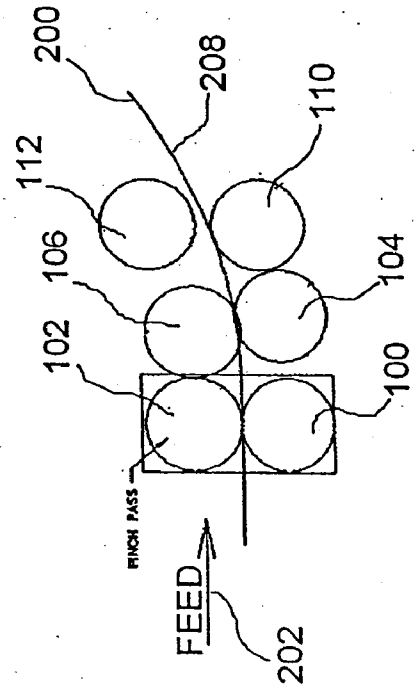

Figure 5a

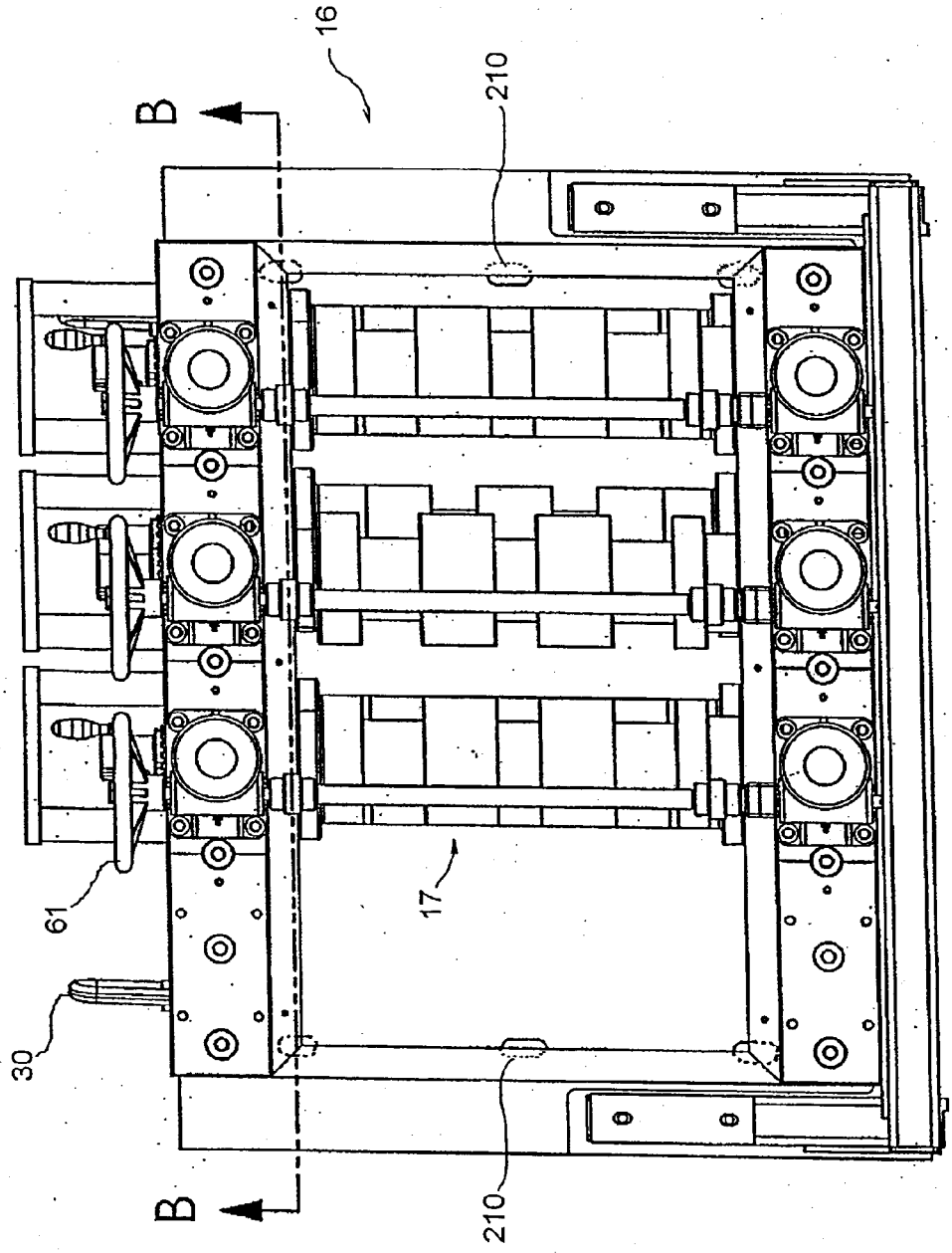

Figure 6

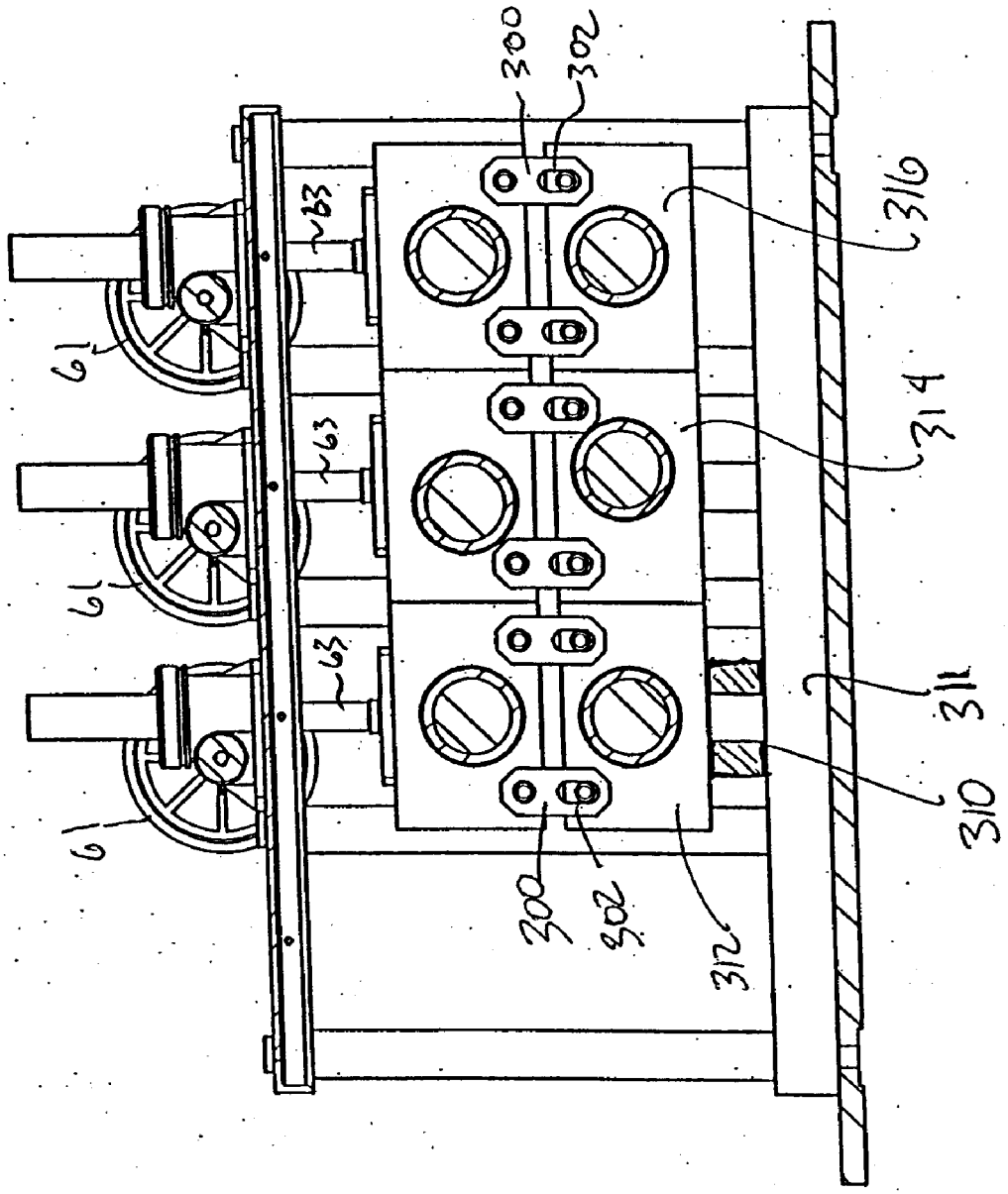

Figure 7

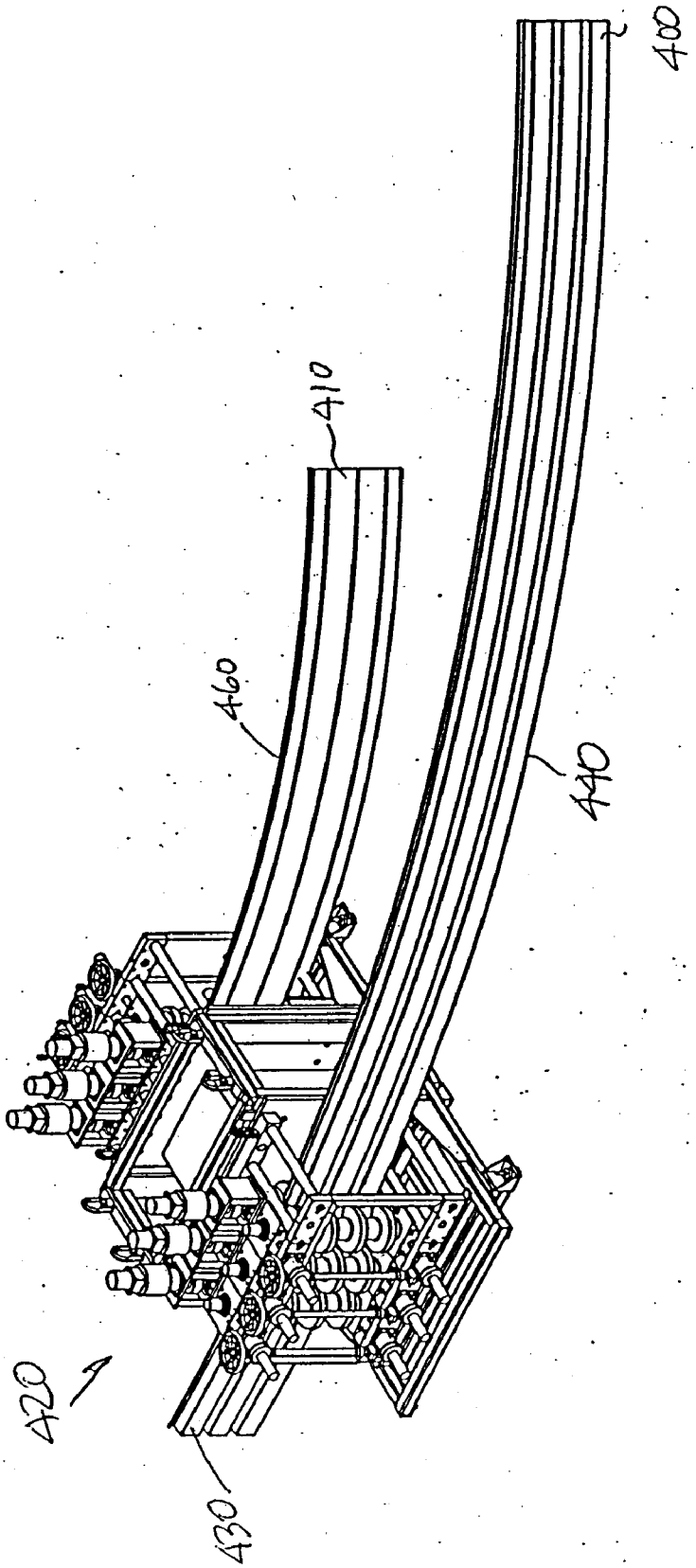

Figure 8

ROLL-FORMING MACHINE FOR FORMING SMOOTH CURVES IN PROFILED PANEL SECTIONS AND METHOD OF FORMING CURVED PANELS

FIELD OF THE INVENTION

[0001] This invention relates generally to the field of roll forming, and more particularly to methods and apparatuses for working with roll formed panels.

BACKGROUND OF THE INVENTION

[0002] Roll forming is an industrial process whereby flat sheets of material can be bent in cross section to attain a corrugated or bent cross sectional profile in a longitudinal panel. Typically roll forming machines consist of pairs of opposed rollers that are shaped to introduce the desired cross-sectional bends into the panel sections. One roller of the roller pair is usually a driven roller and a series of roller pairs are placed along the length of the roll forming machine to effect the required bending in the panel section as it progresses through the roll forming apparatus. Each roller of the opposed roller pair will have a matching or interfacing set of rollers to gently bend the panel cross section into the desired final configuration.

[0003] Many configurations of roll forming apparatus exist, and through the use of various roller shapes the panel profiles can be formed having various cross sectional profiles including rectangular, angled and even folded over sections. The range of modern roll forming equipment permits many panel materials to be rolled formed of many various thicknesses and compositions.

[0004] Metal panels are often used in roll forming and may be for example roll formed into corrugated panels suitable for use as exterior cladding on various types of buildings. A trend of modern building architecture is to include complex curved or rounded surfaces for the buildings, both on the exterior walls and for the roofs of buildings. Roll formed panel sections are well suited for use as roof or wall panel elements or exterior cladding elements, but are not easy to curve in longitudinal curves as required for such modern architecture. Due to the corrugations, panels with complex cross-sectional profiles are not that easy to bend.

[0005] In one form of prior art device a longitudinal curve is formed in a roll formed panel by using a press break device to create a series of sharp incremental longitudinal kinks in the roll formed panel. To achieve the desired overall curve requires imposing a series of individual kinks spaced along the length of the panel. While this method can be used it suffers from several disadvantages, including that it is difficult to achieve the desired profile because the spacing and degree of bend of each angular increment needs to be precisely determined to achieve a panel that is appropriately curved according to the desired tolerances. This type of press break machinery is also heavy machinery located in a fabrication facility, so any miss fitting panel sections have to be returned to the fabrication shop for reshaping, or simply discarded, which is expensive and time consuming. Further the finished product is formed with many creases and so looks busy and unsightly.

[0006] In another form of longitudinal bending machine a panel is rolled horizontally back and forth within a panel forming machine and one centre set of roller elements are moved slightly upwardly between each pass, to gradually form an upward curve in the panel. In this way, after many passes the panel begins to acquire a curved longitudinal profile. However, as the panel is held horizontally, the curve forming is working against gravity. Also, the curve forming takes many passes. Once again it can be difficult to get the right degree of longitudinal curve and if it is not right, it will require a trip back to the fabrication shop to rework the panel section to develop the proper curve. This device has the advantage of forming a smooth rather than a creased curve, which can be considered to be an advantage over the first prior art method discussed above, but it has the disadvantage of requiring many passes, which is time consuming, expensive and difficult to reliable repeat. Repeating the exact same degree of curve on a number of panel sections is often required in larger construction projects.

[0007] Lastly, often the building code, architects or engineers require cladding material for a building be of a complex or built up panel type. In many cases a panel section specified is formed by welding a roll formed liner into a roll formed panel section to improve stiffness, strength and reliability of cladding panel that is to be used as an exterior surface. Matching separately formed curved panel sections to curved liners has been difficult to achieve up until the present.

[0008] What is desired therefore is a roll forming machine and method for imposing smooth repeatable longitudinal curves into roll formed panel sections have complex cross sectional profiles. Most preferable such an apparatus would be able to produce different degrees of curves in the panel sections, without affecting the cross sectional profiles and will also be able to produce curves of both a convex and a concave direction in a single pass. Also, desirably the roll forming machine will be able to adapt to and accommodate a wide range of panel profiles from standard to custom shaped roll formed sections.

SUMMARY OF THE INVENTION

[0009] Therefore, according to the present invention there is provided a roll forming apparatus for the longitudinal bending of panels having complex cross sectional profiles. The present invention in one embodiment includes a hand-operated adjustment to permit the degree of curve formed in the panel to be varied and provides for a positioning of the rollers so that the smooth curve can be formed in a single pass. The present invention can impose either a concave or convex curve, by simple adjustment of the bending mechanism. The components of the present invention are arranged to permit the multiple bending arrangements to be easily and quickly implemented.

[0010] Thus according to a first aspect of the invention there is provided a roll-forming machine for forming smooth curves in profiled panel sections, said roll forming machine comprising:

[0011] Opposed pinch pass rollers having a roller profile generally corresponding to said profiled panel; a pair of cantilever rollers downstream of said pinch pass rollers, said cantilever rollers having axes of rotation that are offset relative to one another in the direction of travel said profiled panel through said machine and having a roller profile generally corresponding to said profiled panel; at least one sweep roller positioned downstream of said cantilever rollers for bending said panel as said panel passes past said sweep roller and having a roller profile generally corresponding to said profiled panel; and a means to position at least said one sweep

roller to control a degree of bend of said smooth curve formed in said panel by said machine.

[0012] According to a further aspect of the invention there is provided a method of forming a smooth curve in a profiled panel in a roll forming machine, comprising the steps of: providing opposed pinch pass rollers having a roller profile generally corresponding to said profiled panel; a pair of cantilever rollers downstream of said pinch pass rollers, said cantilever rollers having axes of rotation that are offset relative to one another in the direction of travel said profiled panel through said machine and having a roller profile generally corresponding to said profiled panel; and at least one sweep roller positioned downstream of said cantilever rollers for bending said panel as said panel passes past said sweep roller and having a roller profile generally corresponding to said profiled panel; positioning said sweep roller relative to said cantilever rollers to impart a smooth curve into said panel; and passing said profiled panel through said machine to impart a smooth longitudinal curve to said panel.

BRIEF DESCRIPTION OF THE DRAWINGS

[0013] Reference will now be made to preferred embodiments of the invention by way of example only, in which:

[0014] FIG. **1** is a perspective view of an apparatus according to the present invention;

[0015] FIG. **2** is a front view of the apparatus of FIG. **1**;

[0016] FIG. **3** is a top view of the apparatus of FIGS. **1** and **2**;

[0017] FIG. **4***a* is a schematic view of the rollers in a first bending position to form a convex bend;

[0018] FIG. **4***b* is a schematic view of the roller configuration to form a concave bend;

[0019] FIG. **5***a* is a schematic view of the rollers in a second bending position to form a concave bend;

[0020] FIG. **5***b* is a schematic view of the rollers in a second bending position to form a convex bend;

[0021] FIG. **6** is an end view of the left side of the apparatus of FIGS. **1** and **2**;

[0022] FIG. **7** is an end view of the right side of the apparatus of FIGS. **1** and **2**; and

[0023] FIG. **8** is view of the embodiment of FIG. **1** of the present invention making curved panels and liners.

DETAILED DESCRIPTION OF THE PREFERRED EMBODIMENTS

[0024] A panel curving apparatus for roll forming smooth longitudinal curves in profiled panel sections according to the present invention is shown generally as **10** in FIG. **1**. The preferred curving apparatus **10** includes three main sections, namely a first tooling raft **12**, a central instrumentation and control station **14** and a second tooling raft **16**. As will be explained in more detail below the first and second tooling rafts **12**, **16** are generally similar in operation, but may be provided with different roller tooling configurations to facilitate the use of the invention. For example, in one preferred embodiment the first tooling raft **12** can have rollers **15** that are suitable for N-Decking type panel material and the second tooling raft can have rollers **17** that are suitable for a liner panel for the N-Decking panels of the first tooling raft. It will be noted from FIG. **1** that the rollers are oriented on a generally vertical axis of rotation for example as shown at A for reasons explained in more detail below.

[0025] Although the terms left hand and right hand are used at times in this specification the present invention is not limited to a particular left handed or right handed configuration and the terms are used for ease of understanding only. The term longitudinal is also used an generally means generally in the direction of travel of a panel through the apparatus **10** of the present invention. The term cross sectional direction means a direction transverse to the longitudinal or feed direction. Thus, a panel having a bent cross sectional profile may have had many bends formed into it, in the nature of rectangular or angled ridges or valleys and yet may still lie substantially flat on a planar surface. A panel having a longitudinal bend or curve may also have a corrugated cross sectional profile, but includes an additional curve in the feed direction which means the panel cannot lie generally flat on a planar surface.

[0026] The apparatus **10** includes a central frame **20**, which defines a rigid structure to which each of the tooling rafts **12** and **16** may be releasably attached by means of bolts or the like. The frame **20** includes base frame elements **22**, with feet **24**. The feet preferably include levelling screws **26** to permit the bending apparatus **10** to be levelled as required. A central rectangular frame **28** is also provided around the station **14**, with lifting ears **30**. The lifting ears **30** permit the whole apparatus **10** to be lifted at once, rafts and all, to facilitate the apparatus **10** being transported from location to location. The central rectangular frame **28** provides a convenient space to house the instrumentation station **14**, which includes instrumentation, power controls and the like. A controller module **29** is shown in outline in FIG. **1**.

[0027] Turning now to the rafts **12 16**, while they are generally similar, the presence of two rafts permits two separate roller configurations **15**, **17** to be used. The rafts **12**, **16** include lower raft frames **34**, **36** having an end wall **38**, **40** and bearing support members **42**. In a preferred form of the invention three pairs of rollers **44** are provided on each of rafts **12** and **16**, each roller pair **44** including a passive or slave roller **50** and a powered or driven roller **52**. Three hydraulic motors **56** are provided on each side to power the driven roller of each roller pair **44**.

[0028] The rafts are constructed with upper and lower bearing blocks **58**, **60** for the rollers so each roller is axially aligned and held in position. The bearing blocks **58**, **60** are supported on either side by bearing support members **42**. As well, the present invention provides for a means to move the bearing blocks of at least one roller of each roller pair in a direction generally transverse to the direction of travel of a panel member through the roller pair. In a preferred embodiment the position adjustment is carried out by means of hand wheels **61** which are attached to linkages **62**. Worm gears are used to cause the rotation of the hand wheels to turn threaded members **63** extending to the bearing blocks **58**, **60**. In turn the upper and lower bearing blocks for one roller of each roller pair are connected to the threaded rods by means of a threaded collar, so turning the threaded rod causes the bearing blocks, and thus the roller to move along the threaded rod as the hand wheel is turned. In this way the present invention provides that the hand wheels can be used to precisely move the upper and lower roller bearing blocks connected to the threaded members **63** in and out, so the bearing blocks, and associated rollers, may be set at any desired lateral position, within the range of travel of the threaded members or rods **63**. It is most preferred to control the movement of the upper and lower bearing blocks simultaneously so lateral movement of

the roller is exactly matched at the top and bottom to preserve axial alignment. While the mechanical linkage shown achieves this result, it will be appreciated by those skilled in the art that individual automatic controls could also be used in place of the mechanical linkages. Thus, the present invention comprehends that at least one roller of each roller pair can be moved laterally, relative to the direction of travel of the material passing through the roller pair, to permit the rollers to be positioned precisely as required to impart the desired bend into the panel material. The present invention also provides position control for the other roller of each roller pair as explained in more detail below.

[0029] FIG. **2** shows the apparatus **10** of FIG. **1** from the front. In this view the first tooling raft **12** the central portion **14** and the second tooling raft **16** are visible. As well the hand wheels **61** are shown, with the linkage element **62** and the roller bearing support elements **42**. Also shown are the hydraulic motors **56** on one of the rollers visible in the two presented roller pairs. It will also be noted that the tooling for the roller pair on the first tooling raft **12** (left side of FIG. **1** indicated by **70**) are different from the tooling for the roller pair on the second tooling raft **16** (the right side indicated at **72**). This demonstrates the flexible nature of the present invention in terms of being able to configure the roller tooling to suit specific panel profiles.

[0030] As will be appreciated by those skilled in the art, the rollers of the first and second rafts may need to be changed from time to time. Different panel configurations will require different roller sets and so the present invention provides that each of the first and second rafts can be detached from the frame **20** and lifted by means of the ears **32** off the central frame **50** to facilitate roller tooling change over. Thus, a replacement raft, pre-installed with the newly required rollers can be simply dropped into place and secured to the central frame. In this way the present invention provides an apparatus that can be quickly changed over from one type of roller configuration to another. Alternatively, if the roller pairs are made the same, then one can be in use, while the rollers are being replaced on the other side without having to stop fabrication.

[0031] FIG. **3** is a view from above in which again the first tooling raft **12**, the central portion **14** and the second tooling raft **16** are visible. Also shown are the feet **24** which are located at both the front and the back of the apparatus **10**. Although six feet **24** are shown more or fewer could be used as desired. FIG. **3** also clearly shows the roller pairs **44** according to a preferred embodiment of the present invention. In particular there are, on the first tooling raft **12**, rollers **100** and **102**, forming a pair of pinch rollers, rollers **104**, **106** forming a second offset pair of rollers, which maybe referred to as cantilever rollers and a third pair of rollers **108**, **110** forming sweep rollers. As will be appreciated by those skilled in the art, more or fewer rollers could be used, provided that enough rollers are present to curve the panel section passing through the rollers as explained in more detail below. However, the configuration of rollers as shown has provided reasonable results. The second tooling raft **16** in this preferred configuration also includes three sets of rollers **112** and **114**, **116** and **118** and **120** and **122** as shown. While the following discussion will focus on the rollers on the first tooling raft **12** the same description is applicable to the second tooling raft **16**, as it operates in essentially the same way, but is provided with different tooling.

[0032] As previously stated each of the roller pairs is preferred to include at least one powered roller, and for this purpose hydraulic motors have provided adequate results. The first pair of rollers **100**, **102** are referred to as pinch pass rollers. These rollers are preferred to be configured to generally match the profile of the panel section to be bent in the curve forming or bending apparatus **10**. While in some circumstances it might be possible to use the pinch pass rollers to help bend and shape the lateral cross sectional profile of the panel section being curved in the apparatus **10**, this is less preferred than simple using the apparatus **10** to curve already profiled panel sections. Bending steps to create or change the cross-sectional profile add expense and complexity to the apparatus **10** and is not generally desirable. The apparatus **10**, due to its simple design and modest size can be transported and located at, for example a building site, where it can be used to fabricate curved panel sections on location. In this way the curves required can be tried and if need be the roller adjusted to suit anomalies in the building being fitted with the panels. Extra weight and complexity would detract from the ability to easily transport and use the apparatus and thus, while possible, is not believed desirable.

[0033] As will be understood by those skilled in the art the pinch pass rollers **100**, **102** are set up bearing on each other enough to be able to grasp and drive the panel section being curved forward to the other downstream roller pairs. The middle pair of rollers **104**, **106** are the cantilever or offset roller pair. As can be seen from FIG. **3**, the vertical axes of rotation of the rollers **104**, **106** are offset relative to one another in the direction of travel of the panel through the machine. This is illustrated by means of the distance D between the lines **130** and **132** which are transverse to the feed direction and centered on the roller axes. The last pair of rollers **108**, **110** are the sweep rollers and at least one of the sweep rollers is used to impart the bend to the panel member by bending the panel around the cantilever provided by the offset rollers. This is explained in more detail below.

[0034] FIG. **4***a* is a schematic drawing, from above, showing a panel member **200**, being fed in a feed direction **202** through the pinch pass roller pair **100**, **102**, then through the offset roller pair **104**, **106** and lastly through the sweeping roller pair **108**, **110** and as a result being bent into a convex bend. In FIG. **4***a* the panel is being seized by the pinch pass rollers **100**, **102** and advanced to the offset roller pair. The panel is then fed between the offset roller pair. In this roller pair the roller **104** is offset behind the roller **106**. The roller **106** acts as the main support roller and the roller **104** maintains the cantilever action on the panel **200**. Further along in the direction of the feed, the roller **110** is the sweep roller and the roller **108** is a passive roller which is displaced out of contact with the panel member **200**. Thus the sweep or bending roller **110** bends the panel **200** around the offset roller **104**, while the panel is held by the combination of the cantilever rollers **104**, **106** to prevent bowing of the panel which would make control of the degree of bend in the panel much more difficult.

[0035] FIG. **4***b* is a schematic view of the rollers of FIG. **4***a*, except that the panel feed direction has been reversed and the position of the rollers has been adjusted to suit the change in feed direction. In this case the rollers **108**, **110** act as the pinch pass rollers and the offset rollers **104**, **106** are applied to the panel in the opposite manner as in FIG. **4***a*. Thus, in FIG. **4***b* the roller **104** is the support roller and the roller **106** is the cantilever roller for supporting the panel as it is bent past the

primary sweep roller **100**, which in FIG. **4***a* is roller **110**. The roller **102** is allowed to be displaced out of contact from the panel member **200**. As now can be appreciated, while the roller configuration and feed direction of FIG. **4***a* produces a convex bend the roller configuration and feed direction of FIG. **4***b* produces a concave panel member. The panel **200** is flat at **206**, but curved at **208**.

[0036] The use of the means for adjusting the position of the rollers on the tooling rafts can now be more fully understood. When seeking to produce a panel of a certain curve, the rollers can be positioned relative to one another so as to impart either a convex or concave curve into the panel member **200**. Further the use of the offset roller pair permits the panel to be held in position to permit control of the plastic or non-elastic deformation of the panel member, meaning that the desired curve can be archieved in a single pass through the apparatus **10**. Changes in the degree of curvature can be effected simply by adjusting the lateral position of one or both of the sweep roller or the offset roller pair. Further more, once the rollers are set up, many individual panel sections can be reliably bent into the same degree of curvature without needing any further adjustments to the position of the rollers. However, the apparatus **10** permits the curve forming to be finely adjusted to ensure a close fit can be achieved to the desired installation, at the job site and before a large number of panel sections are curved. Thus, the present invention permits the user to bend a panel, fit the panel to the desired location, note whether any adjustments are required and if so make such adjustment and retest the fit until the fit is exactly what is desired. Only then does the user begin to bend the other panel sections, which will be reliably produced with the best fitting curvature. FIG. **5***a* shows an alternate roller configuration for the rollers of the first tooling raft which can also be used for one pass curving of profiled panel members. In this configuration the feed direction is the same as in FIG. **4***a,* but due to the roller positions the curve formed is a concave curve rather than a convex curve as in FIG. **4***a.* In the case the rollers **100**, **102** form the pinch pass pair of rollers. Then the offset roller pair of **104**, **106** are positioned so as to permit roller **104** to start sweeping or bending the panel member **200** around the support roller **106**. The final sweep or bending is accomplished by the secondary weep roller **110**, while the roller **108** is positioned out of contact with the panel member **200**.

[0037] FIG. **5***b* shows an analogous set up to that of FIG. **4***b* in terms of feed direction, but has the rollers configured to impart a convex bend to the panel member **200**.

[0038] The versatility of the present apparatus can now be understood in that it can impart either convex or concave bends into a panel member, whether the panel member is fed from one side or the other. This flexibility of use facilitates the use of the present invention.

[0039] FIG. **6** is an end view of the apparatus **10** of FIG. **1** from the right-hand side. The second tooling raft **16** is shown and attached by means of bolts at either side at **210**. The panel liner tooling rollers **17** are shown, with the central pair of rollers being offset. The means for moving the rollers, including the hand wheels **61** are also shown.

[0040] FIG. **7** is a cross sectional view looking up along lines B-B in FIG. **6**. This view shows more clearly another aspect of the present invention namely the link plates **300** which extend between the bearing blocks of each bearing pair. While these are shown with respect to the upper bearing pair, it will be appreciated that each bearing block of each associated bearing pair is connected to its opposed bearing block by means of such a link plate **300**. The link plate **300** provides a degree of flexibility in positioning the rollers of any given roller pair with respect to each other. As will now be understood from the discussion of FIGS. **4***a,* **4***b,* **5***a* and **5***b,* the feed direction can be varied from left to right and right to left and the curve can be varied from convex to concave, meaning that sometimes one of the rollers of the roller pair is best left out of contact with the panel member. The link plates **300** are what is used to permit this to be achieved. Essentially the link plate includes a slot **302** which provides room for the bearing blocks to be separated from one another, by the length of the slot, when one of the rollers is to be placed out of contact with the panel member **200**. In most cases the bearing blocks will be pressed together against an end stop or chock or stop block **310**, provided between the frame **311** and the bearing block **312** so that one of the rollers of the roller pair can be pressed onto the other roller. When one of the bearing blocks is backed away or off of the other, then the link plate permits a greater degree of separation to be achieved between the bearing blocks of each roller pair so only the rollers required to do so can be caused to bear against the panel member **200**. Various sizes of chock or stop **310** can be used to precisely position the roller. While only one is shown in FIG. **7**, it will be understood that two or three could be used, one for each bearing block **312**, **314**, **316**. FIG. **8** shows the apparatus **10** in use, with a panel member **400** and a liner panel **410** being bent through the apparatus **10**. The feed direction is shown as **420**, and the unbent or straight panel section **430** and straight liner section passes through the apparatus **10** and acquires the bend **440**, **460** in a single pass. As can be seen, with appropriate adjustment of the rollers the two bent elements can be made to match exactly, permitting the one to be fitted and the attached, such as by welding or the like to the other. In this way a complete cladding element can be fabricated on the site and to the required specifications. Any discrepancies can be quickly and easily adjusted for without requiring the parts be returned to the fabrication shop. The present apparatus can be located at the job site and is in this sense somewhat portable. Most preferably the present invention **10** is sized and shaped to fit on a flat bit trailer, and weighs no more than 15,500 pounds (lbs)

[0041] FIG. **8** illustrate a further aspect of the invention, namely the use of rollers on a vertical rotational axis. As illustrated the panels may be quite long in overall length and if the rollers were oriented horizontally, the feed ends of the panel sections would be high in the air making them hard to handle. Alternatively, if the curve was convex, then the apparatus **10** would have to be high in the air, making adjusting the controls awkward and the overall construction and placement of the device more expensive. As can now be appreciated, by placing the rollers on generally vertical axes of rotation both the apparatus **10** and both ends of the panel section can remain on the ground, making the apparatus **10** easy to use and the resultant curved panels well within reach at all steps of the fabrication.

[0042] While various modifications and alterations are discussed above many additional variations and alterations are comprehended within the broad scope of the attached claims. Some of these have been discussed specifically herein and others will be apparent to those skilled in the art. For example, while the preferred form of the invention is to include first and second tooling rafts, the present invention also comprehends providing only a single tooling raft. Further while the example discussed relates to a form of N-Decking and a liner panel, the roller tooling can be modified as required to suit any form of bent panels of the type suitable for passing through a roll forming machine. Thus, a wide variety of panel cross sectional shapes and configurations can be accommodated by the present invention. What is believed important, without wanting to be limited to any specific theory, is the use of offset

rollers to permit the deformation or plastic bending to occur primarily between the offset rollers and the sweep rollers so the degree of longitudinal curve imported into the panel can be precisely controlled and repeatedly made.

What is claimed is:

1. A roll-forming machine for forming smooth curves in profiled panel sections, said roll forming machine comprising: opposed pinch pass rollers having a roller profile generally corresponding to said profiled panel; a pair of cantilever rollers downstream of said pinch pass rollers, said cantilever rollers having axes of rotation that are offset relative to one another in the direction of travel said profiled panel through said machine and having a roller profile generally corresponding to said profiled panel; at least one sweep roller positioned downstream of said cantilever rollers for bending said panel as said panel passes past said sweep roller and having a roller profile generally corresponding to said profiled panel; and a means to position at least said sweep roller to control a degree of bend of said smooth curve formed in said panel by said machine.

2. A roll forming machine for forming smooth curves in profiled panel sections as claimed in claim **1**, wherein said roll forming machine includes two sweep rollers, each of said sweep rollers having an associated means for positioning said sweep rollers, so said panel may be curved in one direction by one of said sweep rollers or in another direction by the other of said sweep rollers.

3. A roll forming machine for forming smooth curves in profiled panel sections as claimed in claim **1**, wherein said pinch pass rollers, cantilever rollers and sweep rollers rotate about a generally vertical axis.

4. A roll forming machine for forming smooth curves in profiled panel sections as claimed in claim **1**, wherein at least one of said rollers in each roller pair is driven by a motor.

5. A roll forming machine for forming smooth curves in profiled panel sections as claimed in claim **4**, wherein said motor is a hydraulic motor.

6. A roll forming machine for forming smooth curves in profiled panel sections as claimed in claim **4**, including a means to position at least the other of said rollers of each of said roller pairs.

7. A roll forming machine for forming smooth curves in profiled panel sections as claimed in claim **1**, wherein each of said rollers is supported in an upper and a lower bearing housing.

8. A roll forming machine for forming smooth curves in profiled panel sections as claimed in claim **7**, wherein means to position said sweep roller includes a means to position each of said upper and lower bearing housing.

9. A roll forming machine for forming smooth curves in profiled panel sections as claimed in claim **2**, wherein said means to position said sweep roller includes a manually operated hand wheel to translate said roller axis in and out in a direction transverse to a direction of travel of said panel through said machine.

10. A roll forming machine for forming smooth curves in profiled panel sections as claimed in claim **9**, wherein said roll forming machine includes a link element connecting said bearing housings of one of said roller in each of said roller pairs to the bearing housings of the other of said roller pairs.

11. A roll forming machine for forming smooth curves in profiled panel sections as claimed in claim **10**, wherein said link element includes a slot sized and shaped to permit one of said sweep rollers to move into position to form a curve in said panel and the other of said sweep rollers to be moved to a position out of contact with said panel being curved.

12. A roll forming machine for forming smooth curves in profiled panel sections as claimed in claim **1**, further including means to position each of said roller pairs to permit said roller pairs to be positioned to cause three point bending in said panel.

13. A roll forming machine for forming smooth curves in profiled panel sections as claimed in claim **1**, wherein said roll forming machine is formed on a raft, and said raft is sized and shaped to be portable.

14. A roll forming machine for forming smooth curves in profiled panel sections as claimed in claim **1**, wherein said roll forming machine includes a left hand rafted assembly, a right hand rafted assembly and a central housing section, wherein each of said left hand and said right hand rafted assembly includes the elements of claim **1**.

15. A roll forming machine for forming smooth curves in profiled panel sections as claimed in claim **14**, wherein said central housing section and said rafted assemblies are contained on the same base.

16. A method of forming a smooth curve in a profiled panel in a roll forming machine, comprising the steps of: providing opposed pinch pass rollers having a roller profile generally corresponding to said profiled panel; a pair of cantilever rollers downstream of said pinch pass rollers, said cantilever rollers having axes of rotation that are offset relative to one another in the direction of travel said profiled panel through said machine and having a roller profile generally corresponding to said profiled panel; and at least one sweep roller positioned downstream of said cantilever rollers for bending said panel as said panel passes past said sweep roller and having a roller profile generally corresponding to said profiled panel; positioning said sweep roller relative to said cantilever rollers to impart a smooth curve into said panel; and passing said profiled panel through said machine to impart a smooth longitudinal curve to said panel.

17. A method of forming a smooth curve in a profiled panel in a roll forming machine as claimed in claim **16** wherein said step of providing at least one sweep roller comprises providing two sweep rollers, and said step of positioning said sweep roller includes a step of position one of sweep rollers to form a convex curve and the other of said sweep rollers to form an concave curve.

18. A method of forming a smooth curve in a profiled panel in a roll forming machine as claimed in claim **16** further including the step of orienting said panel on a generally upright axis and passing said panel through said machine on said upright axis.

19. A method of forming a smooth curve in a profiled panel in a roll forming machine as claimed in claim **16** including the step of positioning said sweep roller relative to said cantilever rollers by hand.

20. A method of forming a smooth curve in a profiled panel in a roll forming machine as claimed in claim **17** including the step of linking said sweep rollers together so either of said rollers may be moved out of contact with said panel as said panel is being curved in said machine by the other of said sweep rollers.

* * * * *