Feb. 27, 1945. F. ULRICH 2,370,380

MACHINE AND METHOD FOR MAKING SLIDE FASTENERS

Filed March 28, 1939 6 Sheets-Sheet 1

FIG. 1.

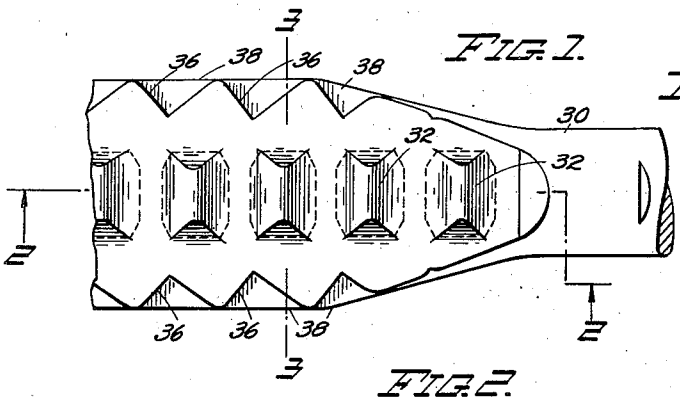

FIG. 12.

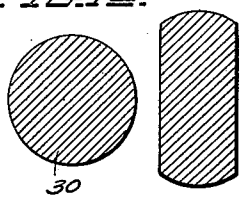

FIG. 13.

FIG. 2.

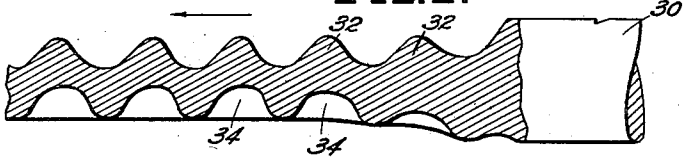

FIG. 5.

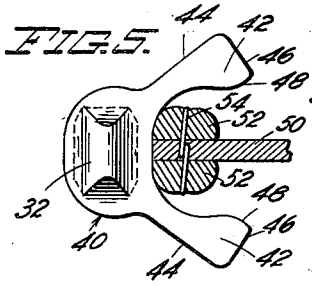

FIG. 3.

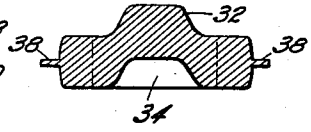

FIG. 6.

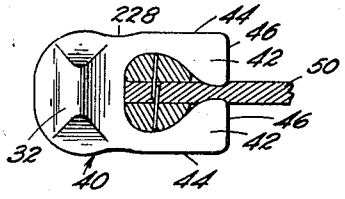

FIG. 7.

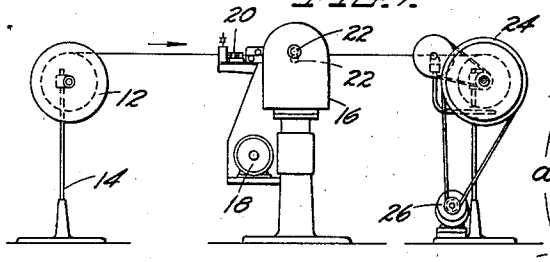

FIG. 4.

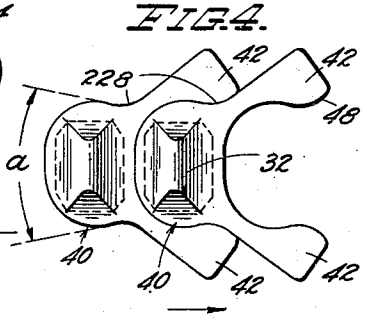

FIG. 8.

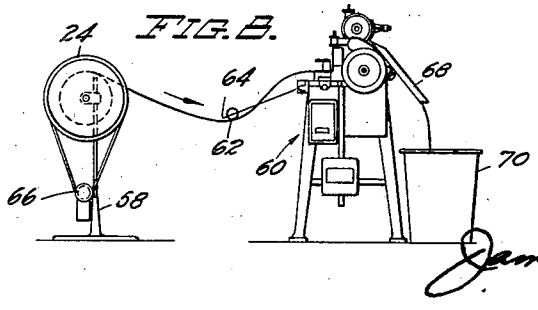

INVENTOR
FREDERICK ULRICH
BY
James & Franklin
ATTORNEY

Feb. 27, 1945. F. ULRICH 2,370,380

MACHINE AND METHOD FOR MAKING SLIDE FASTENERS

Filed March 28, 1939 6 Sheets-Sheet 2

FIG. 9.

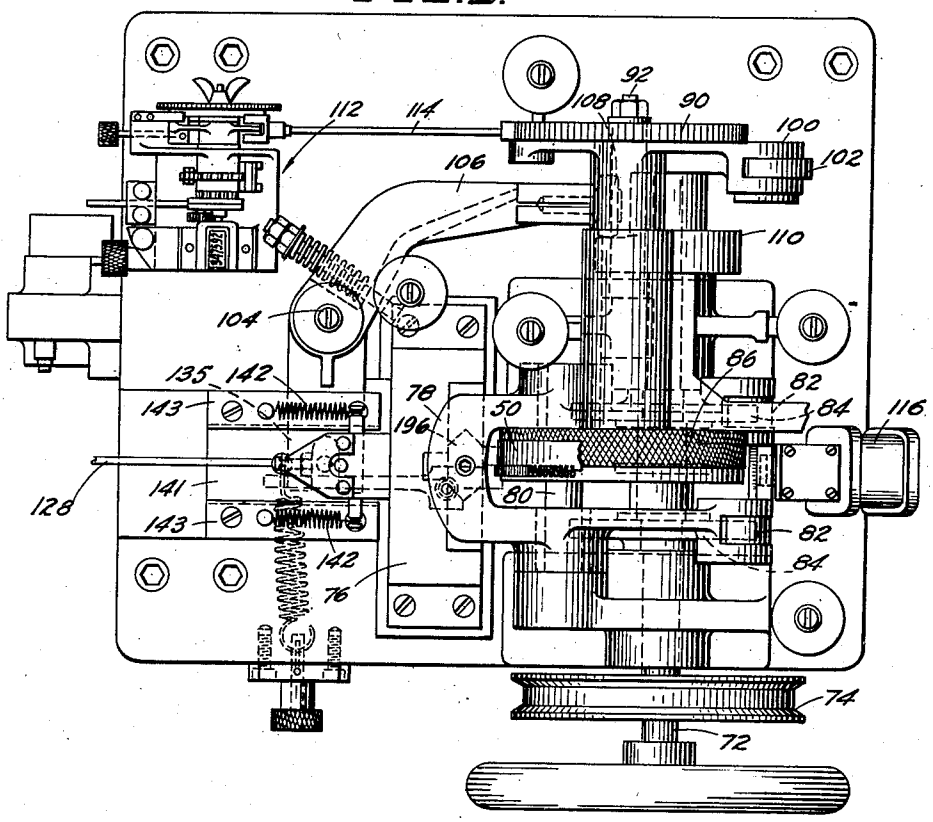

FIG. 10.

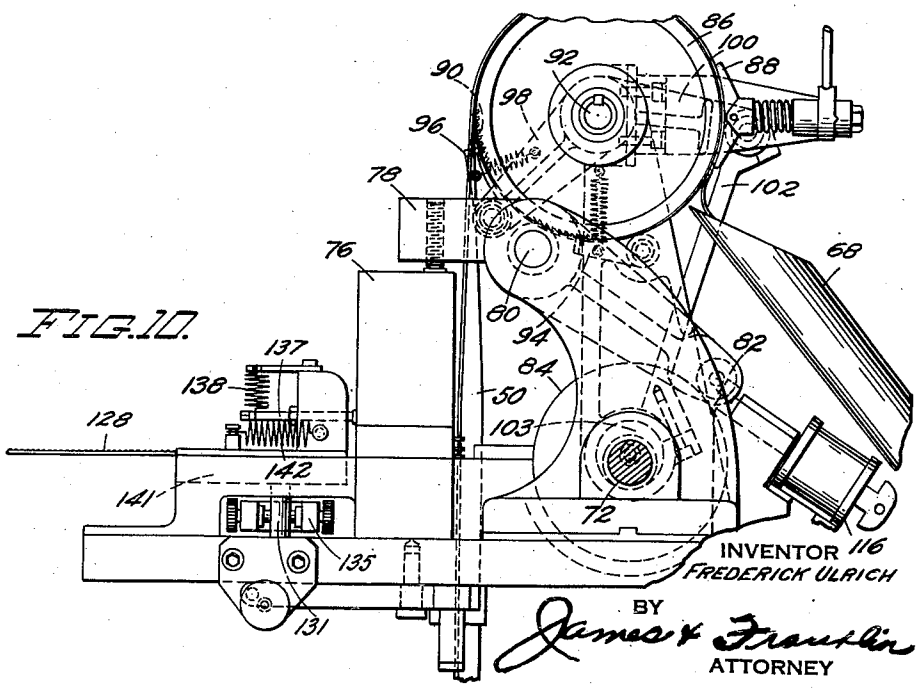

INVENTOR
FREDERICK ULRICH
BY
James & Franklin
ATTORNEY

Feb. 27, 1945. F. ULRICH 2,370,380

MACHINE AND METHOD FOR MAKING SLIDE FASTENERS

Filed March 28, 1939 6 Sheets-Sheet 3

FIG. 11.

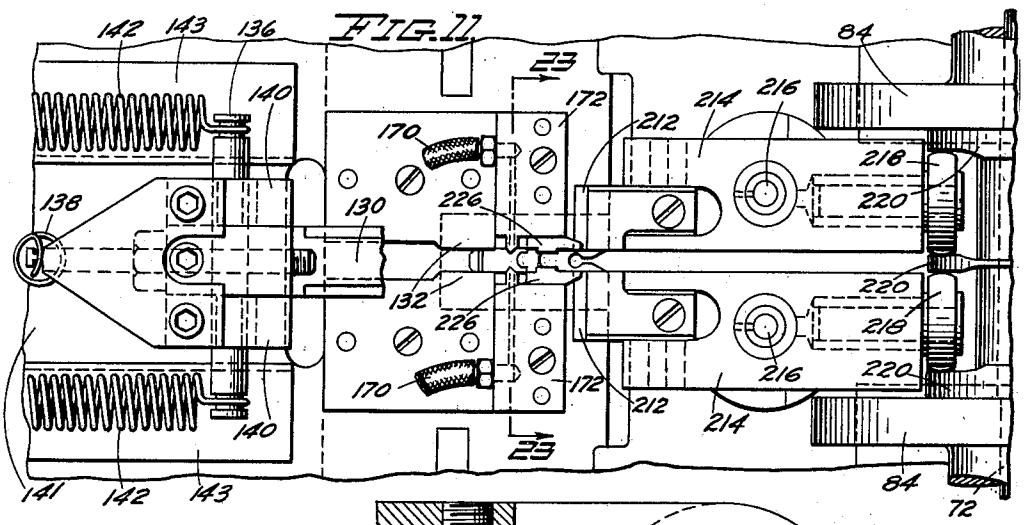

FIG. 12.

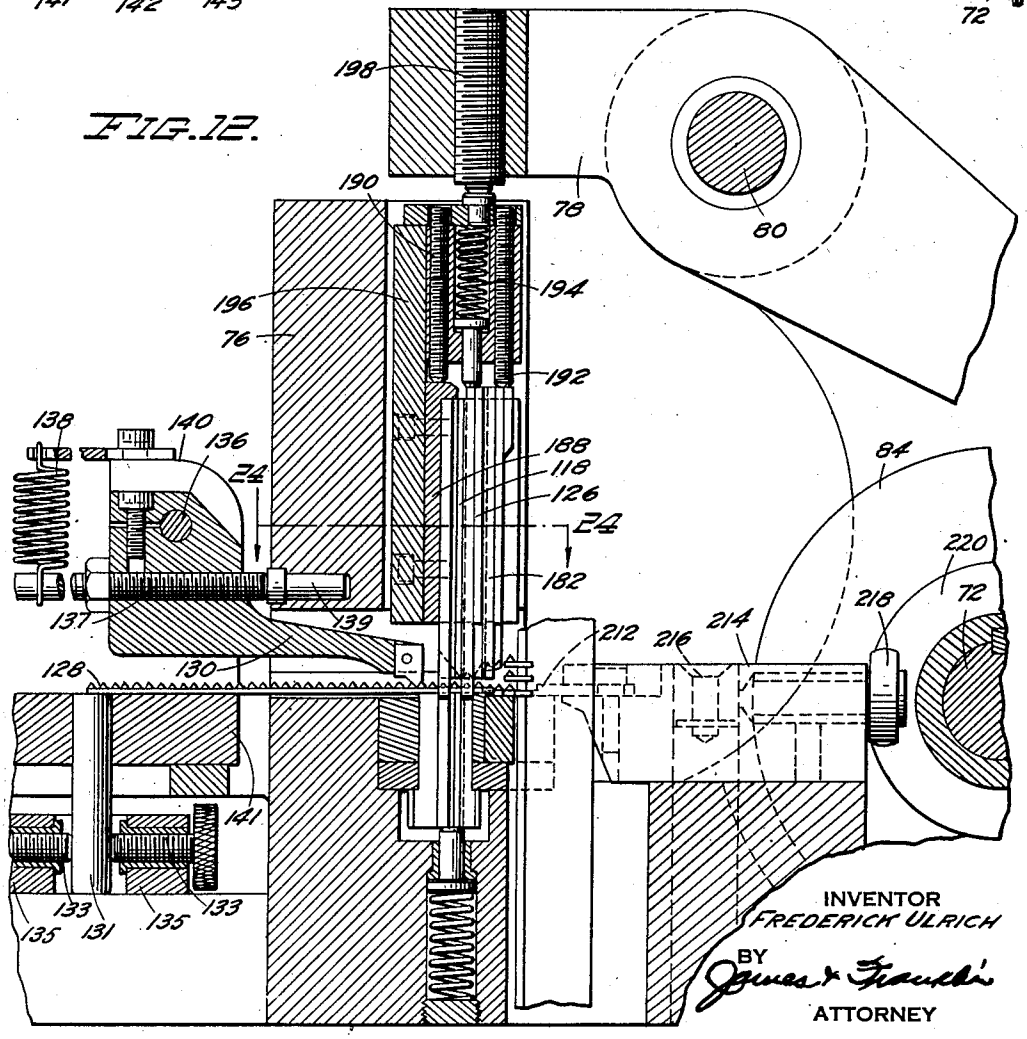

INVENTOR
FREDERICK ULRICH
BY
ATTORNEY

Feb. 27, 1945. F. ULRICH 2,370,380

MACHINE AND METHOD FOR MAKING SLIDE FASTENERS

Filed March 28, 1939 6 Sheets-Sheet 4

FIG. 13.

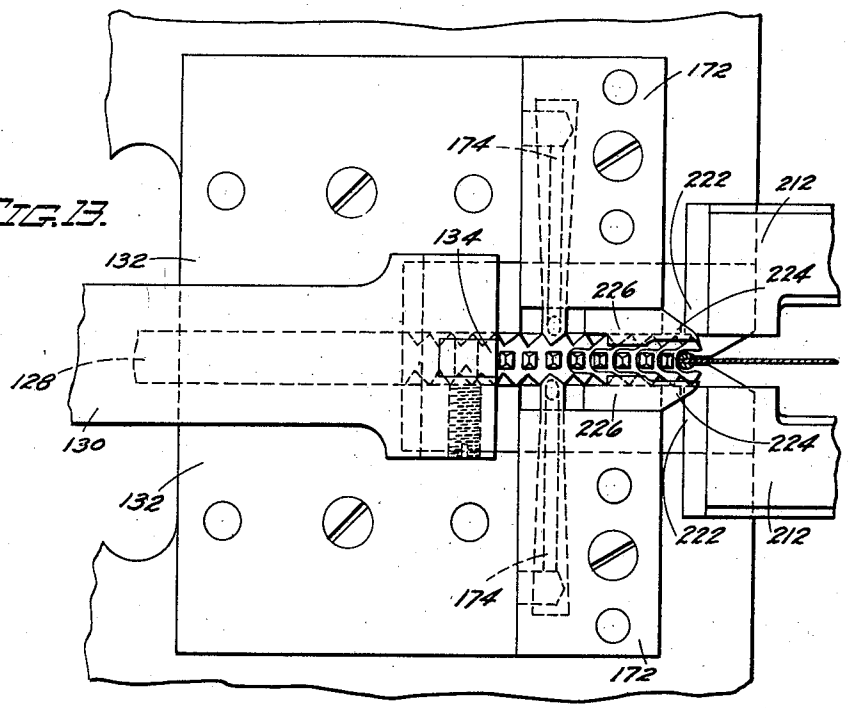

FIG. 14.

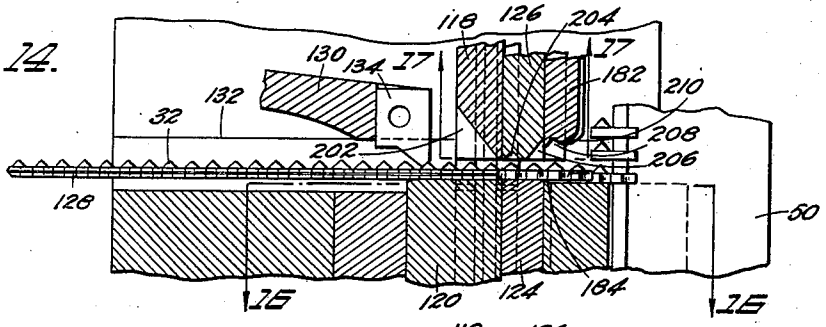

FIG. 15.

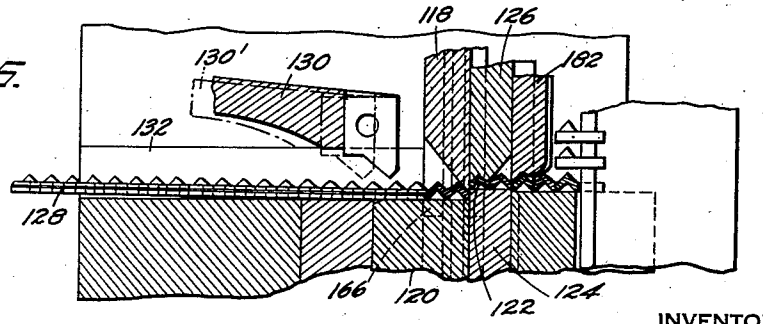

INVENTOR
FREDERICK ULRICH
BY
ATTORNEY

Feb. 27, 1945. F. ULRICH 2,370,380

MACHINE AND METHOD FOR MAKING SLIDE FASTENERS

Filed March 28, 1939 6 Sheets-Sheet 5

FIG. 16.

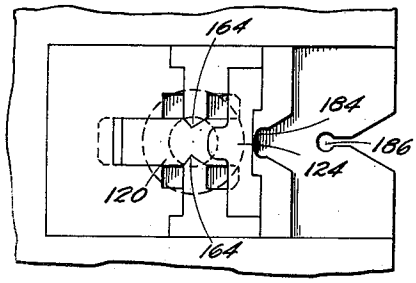

FIG. 17.

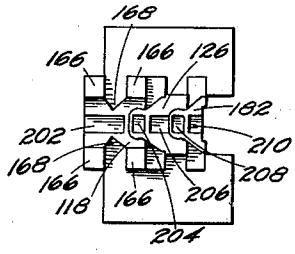

FIG. 18.

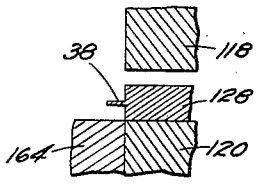

FIG. 19.

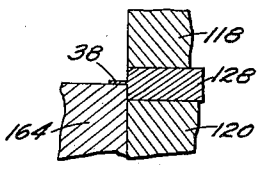

FIG. 20.

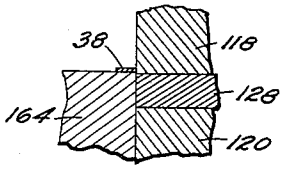

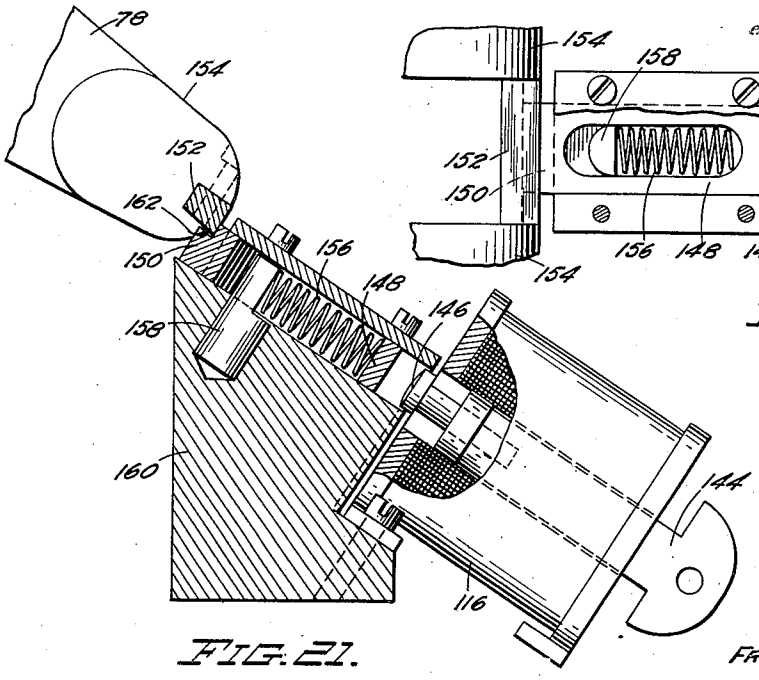

FIG. 21.

FIG. 22.

INVENTOR
FREDERICK ULRICH
BY
ATTORNEY

Feb. 27, 1945. F. ULRICH 2,370,380

MACHINE AND METHOD FOR MAKING SLIDE FASTENERS

Filed March 28, 1939 6 Sheets-Sheet 6

FIG. 23.

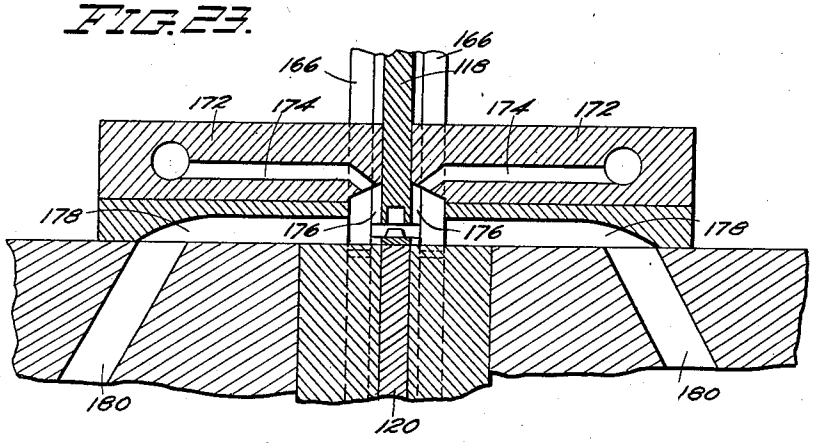

FIG. 24.

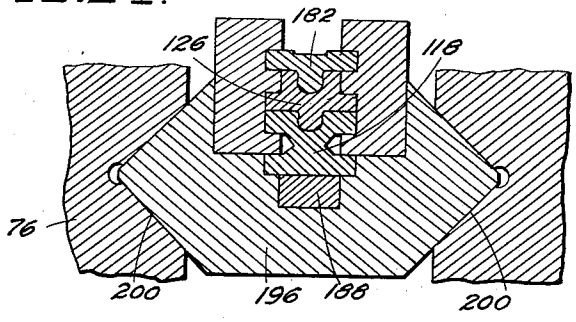

FIG. 25.

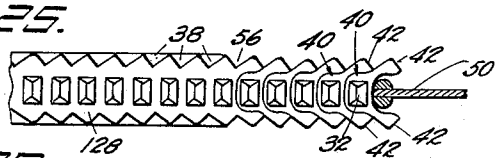

FIG. 26.

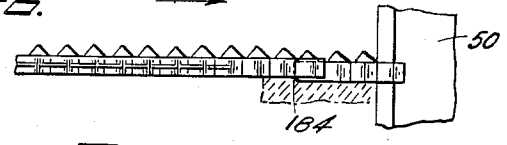

FIG. 27

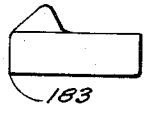

FIG. 28.

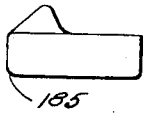

INVENTOR
FREDERICK ULRICH
BY
James & Franklin
ATTORNEY

Patented Feb. 27, 1945 2,370,380

UNITED STATES PATENT OFFICE

2,370,380

MACHINE AND METHOD FOR MAKING SLIDE FASTENERS

Frederick Ulrich, Bayonne, N. J., assignor to Conmar Products Corporation, Bayonne, N. J., a corporation of New Jersey

Application March 28, 1939, Serial No. 264,550

29 Claims. (Cl. 153—1)

This invention relates to slide fasteners and the manufacture thereof.

The ordinary methods of manufacturing standard slide fastener elements involve considerable scrap or waste material, due to the irregular configuration of the element when in open-jawed condition.

The primary object of my invention is to generally improve the manufacture of standard slide fastener elements, particularly with a view to increasing the efficiency and economy of manufacture, and still more specifically with a view to minimizing scrap or waste to a negligible amount while making and handling the material for the elements as a continuous wire. A further object is to make the invention applicable to raw stock of the most conventional and inexpensive character as, for example, a simple round wire of uniform diameter.

Still another object of my invention is to apply the improvement features thereof to the general process disclosed and claimed in co-pending application, Serial No. 215,180, filed by George Wintritz on June 22, 1938, now Patent No. 2,201,068, of May 14, 1940, and entitled "Manufacture of slide fasteners," which process is a most efficient, advantageous and desirable one, despite the single disadvantage that it involves the production of considerable scrap or waste, that disadvantage being eliminated as the main object of the present invention. This object is fulfilled by so shaping the elements that the jaws are so widely spaced and spread, and so shaped as to form a space therebetween large enough to receive the head of the next element, the jaws having diverging outer sides adapted to be brought into substantially parallel relation when the jaws are closed, and having ends converging at such an angle that when the jaws are closed on the tape the ends come perpendicular to the tape.

Further objects of my invention center about the mechanism for feeding the wire toward the tape. In accordance with the present invention, I provide a feed dog which is reciprocable in the direction of feed, but which is prevented from moving downwardly by suitable guides. The severing punch bears against the wire in back of the endmost element being severed from the wire, said punch moving the wire downwardly against the resistance of a spring pad. The timing of the machine is such that the wire is held downwardly by the punch during retraction of the feed dog, and is held upwardly by the spring pad during forward movement of the feed dog, thus providing intermittent feed without necessitating the use of a check dog or holding dog. In accordance with still another feature of the invention, the feed of wire toward the tape is interrupted when providing a gap or space between stringers, by holding the punch downwardly during the spacing operation. In the particular apparatus described herein, this not only interrupts feed of the wire, but avoids repeated reciprocation of the wire relative to the element last severed therefrom, which in turn avoids wear and loosening of the fit beween successive elements.

In order to provide elements of conventional shape with parallel sides when the jaws are closed on the tape, it is necessary for the elements to have diverging sides while the jaws are open. The wire is accordingly preferably provided with serrated edges. However, the most rapid and economical method of forming the wire is by rolling the same under extremely high pressure between a pair of small diameter rolls as described in the aforesaid Wintritz Patent No. 2,201,068. However, in thus rolling the wire, a thin triangular fin is left in the serrations of the side edges of the wire.

A further object of the present invention is to provide suitable means for trimming or serrating the side edges of the wire, and more specifically, for severing the aforesaid triangular fins from the wire. This operation is preferably performed by the main severing punch, the latter cooperating with appropriate die surfaces which trim the fin from the wire. In accordance with a further feature and object of the present invention, I provide special air blast means so disposed with relation to the punch and die for trimming the wire, that the bits of scrap are dependably blown out of the apparatus into a suitable receptacle.

Other objects of the present invention are to prevent angular disposition of an element caused by a kink in the wire or by pressure of the severing punch, and to make room for a rounding or finishing punch, if desired. For this purpose, a series of already-severed elements may be provided between the end of the wire and the tape. Another object is to properly support and confine such severed elements, and to prevent improper orientation of the same, and further, to prevent longitudinal separation of the same.

To the accomplishment of the foregoing and other objects which will hereinafter appear, my invention consists in the method steps and apparatus elements and their relation one to the

other, as hereinafter are more particularly described in the specification and sought to be defined in the claims. The specification is accompanied by drawings in which:

Fig. 1 is a plan view of a piece of wire having a part formed in accordance with the present invention;

Fig. 1*a* shows the section of the round wire before rolling;

Fig. 1*b* is a section through a flat wire which may be used instead of round wire;

Fig. 2 is a longitudinal section taken in the plane of the line 2—2 of Fig. 1;

Fig. 3 is a transverse section taken in the plane of the line 3—3 of Fig. 1;

Fig. 4 shows the relation of the elements when severed;

Fig. 5 illustrates the application of an element to the tape before closing of the jaws;

Fig. 6 is a similar view after closing of the jaws;

Fig. 7 is a side elevation illustrating the apparatus for rolling the wire;

Fig. 8 is a side elevation illustrating the apparatus for severing the wire into individual elements and attaching the same to the tape;

Fig. 9 shows the attaching apparatus in plan;

Fig. 10 shows the upper part of the attaching apparatus in elevation;

Fig. 11 is a plan view of a part of the attaching apparatus drawn to enlarged scale;

Fig. 12 is a section taken in elevation through the punch and feed mechanism;

Fig. 13 is a plan view explanatory of the severing die and the clamping plates;

Fig. 14 is a section through the die with the punches in elevated position;

Fig. 15 is a similar section with the punches in down position;

Fig. 16 is a plan view of the die taken approximately in the plane of the line 16—16 of Fig. 14;

Fig. 17 is an inverted plan view of the punches taken in the plan of the line 17—17 of Fig. 14;

Figs. 18, 19 and 20 are explanatory of the removal of the fin from the wire;

Fig. 21 is a partially sectioned side elevation showing the lock for interrupting the feed of elements to the tape when providing a space between stringers;

Fig. 22 shows the same looking from above;

Fig. 23 is a transverse section through the die, taken in the plane of the line 23—23 of Fig. 11, and illustrates the air blast passages for removal of scrap;

Fig. 24 is a section through the punches, and is taken in the plane of the line 24—24 of Fig. 12;

Fig. 25 shows the wire and the severed elements leading to the tape;

Fig. 26 is a side elevation of the same; and

Figs. 27 and 28 show the element in profile before and after the rounding operation.

The present process may be divided into two stages, as in the aforesaid Patent No. 2,201,068. The first stage is illustrated in Fig. 7, and in this stage a wire is deformed, preferably by rolling the wire under pressure, to form a fastener wire such as is illustrated in Figs. 1, 2 and 3 of the drawings. The stock used may be a simple round or oval wire, or, if desired, it may be a flat or somewhat flattened wire. This wire is taken from a reel 12 supported on a suitable pedestal 14, and is fed through a rolling mill 16, the latter being driven by a motor 18. The mill may, if desired, be preceded by appropriate straightening rolls 20. The rolling mill is not disclosed in detail herein, it being like that disclosed in the aforesaid Patent No. 2,201,068. The wire is rolled in a single passage under high pressure through comparatively tiny or small-diameter pressure rolls 22, and is then reeled up on a suitable reel 24, the latter being turned by motor 26.

Referring now to Figs. 1, 2 and 3 of the drawings, the round wire 30 is flattened, and deformed to provide a comparatively closely spaced series of interlocking means. In the present case the interlocking means are of conventional type, and consist of a projection 32 on one side and a recess 34 on the opposite side of the wire. The side edges of the wire are preferably notched or serrated as is indicated at 36. In using a rolling process with the rolls above and below the wire, it is easier and preferable to leave a fin of metal 38 in the serrations. The nature of this fin is most clearly shown in Fig. 3. The wire of Figs. 1 and 2 may be rolled from flattened wire, as is indicated in Fig. 1*b*. This places less load on the forming rolls, but I prefer the round wire of Fig. 1*a* as it is somewhat less expensive. In either case the raw wire stock is a simple smooth wire, and both types are inexpensive compared to specially shaped wires.

The manner in which this wire may be severed to form fastener elements will be clear from inspection of Figs. 4 and 25. In these figures it will be seen that the severed elements comprise a head 40 and widely spread jaws 42. The head portion 40 carries the aforesaid projection 32 on its upper side and recess 34 (Fig. 2) on its lower side. It will be seen on inspection of the drawings that the head of each element is located within and conforms to the jaws of the next element, the head filling the space between the spread jaws. From a more accurate viewpoint, it may be said that the jaws 42 are so widely spaced or spread apart and are so shaped on the interior, as to form a space therebetween large enough to receive the head 40.

The shape of the exterior of the jaws is also important. In Fig. 5, I show the individual element severed from the wire and moved against the beaded edge of a tape. When the jaws are closed, the element is attached to the tape as shown in Fig. 6. Comparing Figs. 5 and 6, it will be seen that the outer edges 44 of the jaws change from a very divergent position to parallel position, and furthermore, are spaced apart an amount equal to the width of the head 40. The end walls 46 of the jaws are preferably disposed substantially perpendicular to the outer edges 44, so that when the jaws are closed the ends 46 form a surface which is substantially perpendicular to the tape, as is shown in Fig. 6. When the element is completed and fastened to the tape, it does not differ noticeably from elements made by the more conventional wasteful methods except, perhaps, for the shape of the opening between the jaws receiving the beaded edge of the tape. This, however, is not normally visible.

At the inside the jaws are preferably provided with short walls 48 which preferably extend generally parallel to the outer walls 44 and generally perpendicular to the end walls 46. With this arrangement, the inside walls 48 bear directly against the tape when the jaws are closed, as shown in Fig. 6, thus providing a substantial bearing surface to prevent cutting or penetration of the tape. The tape itself may be made in accordance with known methods, it comprising a woven tape 50 having cords 52 stitched on opposite sides

at one edge of the tape, as by means of the stitching 54.

In Fig. 25 it will be observed that the fin 38 is removed at the point 56, this preferably being done as a part of the severing operation which cuts the wire into individual fastener elements. Because it is very thin and small in area, the fin constitutes only a very small amount of scrap or waste.

The apparatus for removing the fin, severing the elements and attaching the same to the tape, is shown in Fig. 8. The reel 24 of fastener wire is supported on a suitable stand 58. The fastener wire is taken from reel 24 and fed to the attaching machine 60. A loop of slack 62 may be maintained between reel 24 and machine 60, as by means of a feeler 64 controlling a motor 66 for intermittently unwinding the reel. The attaching machine 60 severs the elements and attaches the same to a tape, the resulting continuous stringer being fed through a discharge tube 68 into a basket 70.

The attaching apparatus is shown in somewhat greater detail in Figs. 9 and 10 of the drawings. The apparatus comprises a timing shaft or cam shaft 72, said shaft carrying pulley 74 belted to a suitable driving motor. The punches are carried by a ram 196 slidable in the guides or ways of a ram housing 76. The ram is reciprocated by a generally U-shaped rocker 78, the two branches of said rocker being pivoted at 80, and the ends of the branches carrying cam follower rollers 82 which cooperate with cams 84 carried by the cam shaft 72. The tape 50 is fed intermittently upward by means of a tape feed drum 86, the tape being held on the drum by means of a shoe 88. Drum 86 is moved by suitable pawl and ratchet mechanism, the ratchet wheel 90 being mounted at the end of shaft 92 carrying the feed drum. There is a holding pawl 94 and a feed pawl 96, the latter being carried on arm 98 pivoted on shaft 92 and having an oppositely extending arm 100 connected by means of a connecting rod 102 to an eccentric 103 on cam shaft 72.

The wire is intermittently fed in a horizontal direction toward tape 50. The feed mechanism will be described in detail later, but at this point it may be observed that the feed dog is reciprocated by means of a feed lever pivoted at 104, the arm 106 of the feed lever carrying a cam follower roller 108 cooperating with a cylindrical cam 110 mounted on cam shaft 72. The apparatus further includes a counter generally designated 112, this counter being connected to the cam shaft by a suitable link 114. After a predetermined number of fastener elements has been attached to the tape, the counter functions to interrupt the feed of the wire toward the tape. This is described in greater detail later, but at present it may be pointed out that the counter operates to energize a solenoid 116 which in turn locks the cam followers 82 of the rocker 78 in elevated position, thereby interrupting the reciprocation of the punches.

The nature of the severing punch and die may be explained with reference to Figs. 14 through 17 of the drawings. The severing punch is indicated at 118. A spring pad 120 is located therebeneath. It should be understood that punch 118 operates by cutting the wire downwardly away from the endmost element, rather than by cutting the element away from the wire. The element 122 (Fig. 15) rests on the top surface of a stationary die member 124. If desired it may be held downwardly by means of a suitable holding and locating pad 126 which is nested alongside the punch, but which is spring-pressed and therefore adapted to yieldably stop as the punch continues its downward cutting stroke. The operation will be apparent by comparison of Figs. 14 and 15. In Fig. 14 the punch 118 and holding pad 126 are shown in elevated position. The fastener wire 128 is supported by spring pad 120, the latter being in elevated position. In Fig. 15, the punch is shown in down position, and it will be seen that while the element 122 is held against die member 124 by means of the locating pad 126, the punch 118 has descended and forced the wire 128 downwardly, together with the spring pad 120, the wire being sheared from the element 122. When the punch again rises, the wire is raised by spring pad 120, thus bringing the jaws at the end of the wire back into the initial position with the jaws encompassing the head of the severed element 122.

Figs. 14 and 15 may also be used to illustrate the feed of the wire 128. The wire is fed by means of a feed dog 130 which bears against the projections 32 on the wire, as is shown in Fig. 14. The dog 130 may be rigid, or may be spring-pressed downwardly, but is prevented from moving lower than the position shown in Fig. 14, by suitable guides or rails 132 on opposite sides of the tooth 134 of the feed dog. The relation of the parts is such that when spring pad 120 is in elevated position, as shown in Fig. 14, the feed dog engages the wire, but when the wire is depressed by punch 118, as shown in Fig. 15, the wire is disengaged from feed dog 130. The timing of the machine at the cam shaft is such that feed dog 130 moves forward while punch 118 is elevated, and moves backward, as from the solid to the broken line position 130' of Fig. 15, when the punch is down. This construction eliminates the need for a holding dog or check dog, the wire being fed forwardly when engaged by the feed dog, and being held against movement by the punch at all other times. In fact, there is nothing to urge rearward movement of the wire, the wire being disengaged from the feed dog when the latter is moving back. The operation may be made very rapid, for the stroke of the feed dog is small, and is not accompanied by any appreciable vertical movement.

Referring to Fig. 12, the feed dog 130 is pivotally mounted on a pin 136, and is normally urged downwardly by pull spring 138. The pin 136 is carried in bearings 140 forming a part of a reciprocable feed carriage or slide 141 (Figs. 9 and 10) running in guides 143. The slide 141 is normally pulled to retracted position by means of pull springs 142 (Figs. 9 and 11).

A pin 131 (Fig. 12) projects downwardly from slide 141, and is engaged by screws 133 carried in the ends 135 of the feed arm 106 (Fig. 9). These screws provide adjustment of the terminal point of the stroke of feed dog 130. The exact terminal point is accurately determined by adjustment of screw 137, which strikes an insert 139 in block 76. An extension of screw 137 receives the lower end of spring 138.

The manner in which the feed of wire 128 is interrupted to produce a gap or space between stringers will now be apparent, for if the severing punch 118 is locked in its down position (Fig. 15) the wire 128 is held below the feed dog 130, and the latter reciprocates idly without feeding the wire. This is of advantage because of its simplicity and because it eliminates reciprocation

of the punch and rocker and associated parts. Moreover, it avoids moving the jaws at the end of the wire repeatedly into and out of engagement with the head of the element last severed. Such repeated reciprocations would tend to wear away metal around the outside of the head and the inside of the jaws, bringing these parts below size, and in any event, producing a very loose fit therebetween instead of the snug, accurate engagement which is now obtained.

In connection with Figs. 9 and 10, it has already been mentioned that the counter energizes solenoid 116, thereby locking the right-hand end of the rocker in elevated position. The mechanism for this purpose is shown in greater detail in Figs. 21 and 22 of the drawings, referring to which it will be seen that on energization of solenoid 116, the core 144 is drawn into the solenoid. The preferably non-ferrous button 146 at the end of the core bears against block 148 and moves the end 150 of the block beneath a suitable bar 152 extending across the ends 154 of rocker 78. The bar 148 is normally retracted by a suitable compression spring 156, said spring being located in a slot cut through the bar, and one end of said spring reacting against a stationary pin 158 projecting into the slot from the stationary block 160 on which the parts are mounted.

In operation, the rocker 78 and with it the bar 152 is reciprocating rapidly. When solenoid 116 is energized the end 150 of the block 148 moves into engagement with bar 152, but cannot come beneath bar 152 until the bar has been elevated by the rise of the cam actuated rocker 78. End 150 then slides beneath bar 152 and holds the rocker arm in locked position until the solenoid is deenergized. The pressure of bar 152 against block 148 is sufficient to prevent the block from moving to retracted position until the rise of the cam again reaches the rocker. This relieves the pressure on the block 148 and it is thereupon retracted by spring 156. In this way the movement of the rocker is in complete cycles, and the rocker cannot be stopped or started in the middle of a cycle. To further insure this result, the working end of block 148 is preferably cut at a slight angle or provided with an undercut, as is indicated at 162, and the lower face of cross-bar 152 is preferably shaped to a mating angle. The slightly undercut relation of the surfaces guards against premature retraction of block 148.

The triangular pieces of fin 38 are preferably removed by the severing punch, the latter cooperating with appropriate stationary parts on the die. Referring to Fig. 16, it will be seen that the die has stationary die surfaces 164 which are pointed or shaped to conform to the desired notches or serrations in the wire. The spring pad 120 is indented to receive the points 164. Referring now to Fig. 17, it will be seen that the severing punch 118 is provided with four heels 166 and that the punch is channeled at 168 between the heels to mate with the die surfaces 164 of Fig. 16. Referring now to Figs. 18 through 20, these figures are fragmentary transverse sections at the die surfaces 164. In Fig. 18 the punch 118 is raised, and spring pad 120 supports the wire 128 in elevated position. At this time the fin 38 is disposed above the stationary die surface 164. In Fig. 19, the punch 118 has descended partially, and has moved wire 128 downwardly with spring pad 120 until the fin 38 rests on stationary die surface 164. In Fig. 20 the punch 118 has moved downwardly to the ends of its stroke, thereby severing the wire 128 from the scrap or fin 38, the latter remaining on stationary die surface 164. The heels 166 of the severing punch 118 (Fig. 17) preferably are of such length as to bear against the pad 120 (Fig. 16) during the cutting stroke, as is shown in Fig. 15. This helps prevent deformation of the wire under the impact of the punch.

The bits of scrap or fin are very tiny, and cannot be discharged gravitationally as with ordinary scrap or waste, because they are on top of the die. They tend to cling to the parts of the apparatus, particularly in the presence of an oil film. In the present apparatus, this difficulty has been overcome by removing the scrap with the aid of a blast of air. Referring to Fig. 11, the compressed air is supplied through flexible pipes 170, these leading into blocks 172 secured directly on top of the die. Referring now to Fig. 23, which is a section taken on the line 23—23 of Fig. 11, it will be seen that the compressed air is led inwardly through passages 174 and is then directed downwardly at the punch 118 and into enclosed chambers 176. The compressed air then flows outwardly through passages 178, carrying the fin or scrap with it, and then downwardly through discharge passages 180 leading to a suitable box beneath the attaching machine for receiving the waste. The compressed air blowing at the sides of punch 118 tends to get between the severed scrap and the punch, and this probably accounts for the success with which the scrap is blown away through passages 178 and 180.

As a refinement which, however, is by no means essential, I prefer to provide the apparatus with a finishing punch or rounding punch, this being indicated at 182 in Figs. 14 and 15. It is moved together with punch 118 and forms a part of the punch assembly. Its purpose is to round the lower edge of the element about the head. I may explain that during the severing operation the periphery of the head is provided with a rather sharp or square corner at the bottom. This is indicated at 183 in Fig. 27. The elements may be left in this fashion, but it is preferable to round the corner, as is indicated at 185 in Fig. 28. For this purpose the elements may be treated after being secured to the tape, as by means of wire brushes. However, this requires an extra operation, and may tend to dirty the tape, and does not round the edge of the element very much. In the present arrangement, the stationary die surface beneath one of the severed elements is depressed and rounded somewhat, as is indicated at 184 in Fig. 26. The rounding punch 182 forces the subjacent element into the die curvature at 184, and thereby rounds the corner of the head. This will also be seen from examination of Fig. 14, the curved surface 184 of the die being shown unoccupied in Fig. 14.

Referring to Fig. 16, the downward step of the die surface is clearly indicated at 184, and it will be seen in this figure that the outline of the step 184 conforms to the exterior outline of the fastener element, and clears the jaws. The elements remain at the slightly lower elevation of the right-hand part of the die surface until they reach the tape, the latter being guided in the tape guide 186.

Reverting to Figs. 25 and 26, it will be seen that in the present apparatus there are five severed elements between the wire 128 and the tape 50. The rounding punch operates upon the middle one of these five elements. The last two elements are always at the lower die level. The

third element from the end is initially at the upper die level, but after descent of the rounding punch, is moved to the lower die level. It should be understood that the difference in elevation is very slight indeed, and need only be a matter of $^{15}/_{1000}$ of an inch.

The construction of the punch assembly may be explained with reference to Fig. 12 in which it will be seen that the severing punch 118 is secured to a guide 188, the elevation of the punch being adjusted by means of the screw 190. The rounding punch 182 is adjusted by means of screw 192. The spring pad 126 is nested between the punches 118 and 182, and is yieldably urged downwardly by means of spring 194. The entire punch assembly is carried by a ram 196 which is reciprocable in the guides or ways of ram housing 76. Rocker 78 may be provided with an adjusting screw 198 bearing against the ram. Referring now to Fig. 24, the manner in which the edges of ram 196 are received in guides or ways 200 formed in ram housing 76, will be apparent. The nested relation of the severing punch 118, the spring pad 126 and the rounding punch 182, is also clearly shown.

Before leaving the description of the punch assembly, it may be pointed out with reference to Fig. 17 that punch 118 is cut away at 202 to clear the projections on the fastener wire reaching the punch; that the spring pressed pad 126 is recessed at 204 to fit around the projection of the element being severed from the wire, and the pad 126 therefore acts as a locating pad which helps insure a uniform location of the cut or periphery of the head about the projection and recess of the head. The spring pad 126 is cut away at 206 to clear the projection of the next element. The rounding punch 182 is recessed at 208 to fit about the projection of the element being rounded, and this is desirable in order not to flatten or deform the shape of the element during the rounding operation. This punch is also cut away at 210 to clear the projection of the next element.

The shaping of some of these recesses will be clear from inspection of Fig. 14, severing punch 118 being cut away at 202; spring pad 126 being recessed at 204, and cut away at 206; the rounding punch 182 being recessed at 208 and cut away at 210.

The endmost element is clamped on the tape by an oppositely movable pair of clamping plates. Referring to Figs. 11 and 12, the clamping plates 212 are secured to levers 214 pivoted at 216. The opposite ends of the levers carry cam followers 218 which run between cylindrical cams 220, said cams being carried on the main cam shaft 72 of the machine. The cams are so shaped as to oppositely move the clamping plates.

Referring now to Fig. 13, it will be seen that the corners 222 of clamping plates 212 are so located as to engage the jaws of the endmost element and at the same time to clear the jaws of the element next to the end. The clamping plates are thinned to come beneath the ends 224 of guides or rails 226 which guide and confine the already-severed elements. When the clamping plates 212 move together, they compress the spread jaws of the endmost element from a condition such as that shown in Figs. 13 and 5, to the closed condition of Fig. 6.

The provision of a series of severed elements between the wire and the tape, as for example, the five severed elements shown in Fig. 25, is not essential but is of advantage in that it provides room for the locating pad and the rounding punch when used. The use of elements which are severed before being delivered to the tape and clamped thereon is also of advantage in avoiding angular disposition of the elements (viewed in elevation) such as might be caused by a kink in the wire or the pressure of the severing punch.

The advantage of keeping the elements integrally related in the form of a wire is substantially retained when using a group of severed elements of the configuration here employed. In the first place, the elements are confined and guided in a track and between guide walls surrounding the ends of the spread jaws. The elements are prevented from moving to improper orientation because of the manner in which the head of one element is snugly received within the jaws of the next element. Finally, any possibility of longitudinal separation of the elements is prevented by the provision of a slight undercut between the elements when viewed in plan. Thus, referring to Fig. 4, it will be seen that the transverse width of the head is reduced at the point 228, or the sides are non-parallel, as indicated at *a*. In other words, the head is necked or narrowed very slightly and even if an undercut of only a few thousandths of an inch is used, it is adequate to prevent longitudinal separation of the elements. This kind of undercut does not, however, prevent transverse separation of the elements, such as takes place when the endmost element is clamped on the tape, and the tape then moves vertically upward to carry the elements upwardly away from the stationary die and the clamping plates.

It is believed that the method of the present invention, as well as the construction and operation of the apparatus, will be apparent from the foregoing detailed description. Simple, uniform wire stock which may be either round or flattened in section is fed between small-diameter rolls which squeeze the wire under high pressure and which in the course of a single pass through the rolls, deform the wire to provide a series of closely spaced projections and recesses along the same. The side edges are also preferably notched or serrated, either completely, or with a slight remaining fin. The wire is reeled, the reels being used as needed for the attaching machine. There the wire is unreeled and is operated upon by punch and die mechanism which removes the fin or triangular pieces of waste, and which severs the wire into fastener elements so shaped that the head of one element is nested fully within and substantially fills the space within the spread jaws of the next element. This relation of the elements avoids waste of metal. The elements are kept in nested relation and are fed toward an intermittently moved tape where the endmost element is clamped on the tape. If desired, a finishing operation such as that produced by the rounding punch may be applied to the elements between the cutting punch and the tape. The upward movement of the tape disengages the attached element from the next element, whereupon the series is again advanced to bring another element astride the tape.

The many advantages of the invention will also be understood from the detailed description. The main advantage, of course, is that the invention minimizes waste or scrap metal. This is accomplished while using elements of generally conventional type, that is, elements the jaws of which come into substantially parallel relationship when closed. The ends of the jaws are

perpendicular to the sides and the tape when closed, and the inner walls of the edges at the ends includes a broad bearing surface for engaging the tape without cutting or penetrating the same. The elements are so crowded or nested together that there are three times as many elements for a given length of wire compared to the practice in Patent No. 2,201,068, previously referred to. This increases the life of the pressure rolls because the rolls produce stock for three times as many elements for each revolution of the rolls. Moreover, the reciprocating strokes in the attaching machine are reduced to a very small amount. The feed of the wire, for example, is only about one-third of that formerly used. The reciprocation of the punch is merely the thickness of the wire. These changes contribute to high speed operation of the attaching machine, and I have successfully operated the attaching machine at a speed of 2400 R. P. M. The manner in which the feed of the wire is interrupted by simply locking the punch rocker with the punch in down position, also contributes to the desired high speed operation. This latter feature prevents reciprocation of the elements into and out of engagement with consequent loosening of the fit therebetween. The use of a series of severed elements between the cutting punch and the tape provides room for the cutting punch and the associated spring pad which holds the element being cut. It also provides room for a finishing or rounding punch. It frees the jaws of the endmost element for the clamping operation, and avoids angular positioning of the element, as by reason of the punch thrust or a bend in the wire. The cutting action used whereby the punch severs the wire from the element instead of vice versa, has the advantage of simplifying the wire feed mechanism; makes it possible to remove the triangular fin or scrap while using only a single cutting operation; and also provides a greater contact area or "land" at the cutting edge of the punch. The sides of the head are non-parallel or converge so as to provide an undercut or interlock of the elements after they are severed and re-engaged, and this prevents longitudinal separation. The nesting of the elements prevents improper orientation as they are moved toward the tape.

It may be pointed out that the strip of metal initially employed may have smooth, continuous edges instead of being notched or serrated, as here disclosed. In such case, the punch and die mechanism will notch or serrate the strip much as here disclosed, the main difference being that the tool will cut through the full thickness of metal instead of merely a thin fin, and in such case the percentage waste or scrap will, of course, be increased.

Going still further, the strip of metal may be a plain flat strip, devoid not only of notches but also of projections and recesses. In such case the apparatus must be modified in a number of respects, the most important of which is the provision of a forming punch to provide the projections and recesses. The rolling apparatus may then be eliminated altogether, and the smooth or "raw" wire is fed directly into the attaching machine. This aspect of my invention is not illustrated or claimed herein, it being fully disclosed and claimed in my copending companion application, Serial No. 264,551, filed concurrently therewith, now Patent No. 2,302,075, patented November 17, 1942.

The said companion or divisional application together with the present application, are continuations in part of my earlier application, Serial No. 179,299, filed December 11, 1937, now Patent No. 2,221,740, of November 12, 1940.

Coming back to the present disclosure, the strip of metal fed to the attaching machine may be more instead of less finished, that is, it may be fully notched or serrated (devoid of fin) when it reaches the attaching machine, and in such case no fin need be removed, and no air blast need be provided. If the wire is initially formed or rolled without a fin, then there is no scrap or waste at all.

The feed dog may be mounted rigidly as disclosed in my aforesaid companion application, (instead of pivotally) because the fastener wire is depressed by the punch during retraction of the feed dog.

It will therefore be apparent that while I have shown and described my invention in a preferred form, many changes and modifications may be made, without departing from the spirit of the invention defined in the following claims.

In the appended claims, I intend the expression "notched or serrated strip" to include either a fully notched strip or a strip which is substantially notched except for a thin residue or fin of metal as specifically disclosed herein.

In claims dealing with the gap-spacing mechanism, I refer to a "counter," which, of course, may be any such device to determine the length of the stringer or spacing between gaps.

I claim:

1. In the manufacture of slide fastener elements comprising a head and spread jaws connected thereto, said jaws being so widely spaced and spread and so shaped as to form a space therebetween large enough to receive the entire head of an identical element, and said jaws being so shaped that when closed the outer edges come into substantially parallel relationship, the method which includes pressing a continuous strip of metal to form a closely spaced series of interlocking means along the entire length of the strip, the interlocking means being so closely spaced as to correspond to a series of embryo elements with spread jaws only if the head of one element is nested fully within and substantially fills the space within the spread jaws of the next element, punching away small triangular pieces of scrap or waste at the side edges of the end of the strip in order to give the end of the strip notched or serrated side edges conforming to the outer ends of spread jaws having the desired shape, and immediately thereafter severing the strip on an outline corresponding to the outline of the head and intersecting the inner angle of the triangular notches at the sides of the strip, in order to define elements of the desired shape without scrap or waste other than the aforesaid triangular pieces of scrap.

2. In the manufacture of slide fasteners, the method which includes providing a wire having a series of interlocking means therealong, the width of the wire equalling that of the desired fastener elements with spread jaws, intermittently feeding a tape transversely of the wire, intermittently feeding the wire toward the tape, severing the end of the wire entirely across the wire in such configuration as to form a fastener element having a head including the interlocking means and having spread jaws, the head being of such dimension as to fully occupy the space between the jaws of the next element, restoring the jaws at the end of the wire and severed element to-

gether again in fully nested relation, intermittently moving the nested severed elements toward the tape, and clamping the jaws of the endmost element on the tape to secure the element to the tape.

3. In the manufacture of slide fasteners, the method which includes providing a wire having a series of interlocking means therealong, severing the end of the wire in such configuration as to form a fastener element having a head including the interlocking means and having spread jaws, the head being of such dimension as to fit between the jaws of the next element, restoring the jaws at the end of the wire and severed element together again in nested relation, the configuration of the head and jaws being such as to interlock the head and jaws of the nested elements against separation longitudinally of the wire, moving the interlocked severed elements toward a tape, and clamping the jaws of the endmost element on the tape to secure the element to the tape.

4. In the manufacture of slide fasteners, the method which includes providing a wire having a series of interlocking means therealong, the width of the wire equalling that of the desired fastener elements with spread jaws, severing the end of the wire entirely across the wire in such configuration as to form a fastener element having a head including the interlocking means and having spread jaws, the head being of such dimension as to fully occupy the space between the jaws of the next element, restoring the jaws at the end of the wire and severed element together again in fully nested relation, moving the nested severed elements toward a tape, finishing the shaping of the nested severed elements before they reach the tape, and clamping the jaws of the endmost element on the tape to secure the element to the tape.

5. Apparatus for the manufacture of slide fasteners, said apparatus comprising means to intermittently feed a wire toward a moving tape and clamping plates, said wire having a width just equal to that of the desired fastener elements with spread jaws, a stationary die, a mating punch movable transversely of the wire to sever the wire from a piece of the wire projecting beyond the punch and overlying the die, the outline of the punch being such that the projecting piece constitutes a fastener element having a head with spread jaws projecting forwardly therefrom, the head being of such dimension as to fill the space between the jaws, and a spring pad beneath the punch to restore the wire to the initial raised position.

6. Apparatus for the manufacture of slide fasteners, said apparatus comprising means to intermittently feed a wire toward a moving tape and clamping plates, said wire having a width just equal to that of the desired fastener elements with spread jaws, punch and die mechanism to sever the wire all the way across into fastener elements each having a head with spread jaws projecting forwardly therefrom, the punch being spaced from the tape an amount such that a number of severed elements lie on the die between the punch and the tape, and fixed guides on the die at each side of said elements to hold the same in alinement, the aforesaid punch and die mechanism being so shaped as to form fastener elements the head end of which is dimensioned to be received in and to fully occupy the jaw end of the next element, thereby avoiding waste of metal and preventing improper orientation of the elements in the aforesaid guides.

7. Apparatus for the manufacture of slide fasteners, said apparatus comprising means to intermittently feed a wire toward a moving tape and clamping plates, said wire having a width just equal to that of the desired fastener elements with spread jaws, and having closely spaced interlocking means therealong, a die and a punch movable transversely of the wire to sever the wire all the way across from a piece of the wire projecting beyond the punch and overlying the die, the outline of the punch being such that the projecting piece constitutes a fastener element having a head with spread jaws projecting forwardly therefrom, the head being of such dimension as to fill the space between the jaws, and a spring pad beneath the punch to restore the wire to the element previously severed therefrom, the punch being spaced from the tape an amount such that a series of severed elements nested together with the head of each filling the jaw space of the next lie on the die between the punch and the tape.

8. Apparatus for the manufacture of slide fasteners, said apparatus comprising means to intermittently feed a wire having closely spaced projections therealong, a punch movable transversely of the wire to bear against and sever the wire from a small piece of the wire projecting beyond the punch, a locating pad yieldably movable with the punch to hold the projecting piece, the outline of the punch being such that the projecting piece constitutes a fastener element having a head with spread jaws projecting forwardly therefrom, the head being of such dimension as to fill the space between the jaws, the lower end of the locating pad being so formed as to mate with the projection on the element in order to properly locate the periphery of the element relative to the projection thereon.

9. Apparatus for the manufacture of slide fasteners, said apparatus comprising means to intermittently feed a tape, means to intermittently feed toward the tape a wire having closely spaced interlocking means therealong, a punch movable transversely of the wire to sever therefrom a fastener element having a head with spread jaws projecting forwardly therefrom, a cam for reciprocating the punch, a rocker arm between the cam and punch, a counter, and means responsive to the counter for locking the rocker arm in outermost position at the cam and thereby interrupting the supply of severed elements to the tape without interrupting feed of the tape.

10. Apparatus for the manufacture of slide fasteners, said apparatus comprising means to intermittently feed toward a tape a wire having closely spaced interlocking means therealong, a punch movable transversely of the wire to sever a piece of the wire, the outline of the punch being such that the severed piece constitutes a fastener element having a head with spread jaws projecting forwardly therefrom, the head being of such dimension as to fill the space between the jaws, a spring pad beneath the punch to restore the severed parts, the punch being spaced from the tape an amount such that a series of severed elements nested together with the head of each filling the jaw space of the next lie between the punch and the tape, and finishing means located between the severing punch and the tape, said finishing means functioning to

smooth a part of an element between the severing punch and the tape.

11. Apparatus for the manufacture of slide fasteners, said apparatus comprising means to intermittently feed toward a tape a wire having closely spaced interlocking means therealong, a punch movable transversely of the wire to sever the wire from a piece of the wire projecting beyond the punch, the outline of the punch being such that the projecting piece constitutes a fastener element having a head with spread jaws projecting forwardly therefrom, the head being of such dimension as to fill the space between the jaws, a spring pad beneath the punch to restore the wire to the element previously severed therefrom, the punch being spaced from the tape an amount such that a series of severed elements nested together with the head of each filling the jaw space of the next lie between the punch and the tape, and a rounding punch associated with said severing punch and located between the severing punch and the tape, said rounding punch functioning to round the lower peripheral edge of the head of an element between the severing punch and the tape.

12. Apparatus for the manufacture of slide fasteners, said apparatus comprising means to intermittently feed a wire having a series of projections therealong, said wire feed means comprising a reciprocating dog for engaging a projection on the wire and feeding the wire during its forward movement, a punch movable transversely of the wire to sever the wire downwardly from a piece of the wire projecting beyond the punch, the outline of the punch being such that the aforesaid severed piece constitutes a fastener element, and a spring pad beneath the punch, the timing of the machine being such that the wire is held downwardly by the punch during retraction of the feed dog and is held upwardly by the spring pad during forward movement of the feed dog.

13. Apparatus for the manufacture of slide fasteners, said apparatus comprising means to intermittently feed a wire having closely spaced interlocking means therealong, said wire feed means comprising a feed cam and a feed dog reciprocated thereby for engaging and feeding the wire during its forward movement, a punch movable transversely of the wire to sever the wire downwardly from a piece of the wire projecting beyond the punch, the outline of the punch being such that the projecting piece constitutes a fastener element having a head with spread jaws projecting forwardly therefrom, the head being of such dimension as to fill the space between the jaws, a spring pad beneath the punch to restore the wire to the initial raised position, and a punch operating cam, the timing of the cams of the machine being such that the wire is held downwardly by the punch during retraction of the feed dog, and is held upwardly by the spring pad during the forward movement of the feed dog.

14. Apparatus for the manufacture of slide fasteners, said apparatus comprising means to intermittently feed a wire, said wire feed means comprising a reciprocating feed dog for engaging a projection on the wire and feeding the wire during its forward movement, a punch movable transversely of the wire to sever the wire downwardly from a piece of the wire projecting beyond the punch, the outline of the punch being such that the severed piece constitutes a fastener element, a spring pad beneath the punch, the timing of the machine being such that the wire is held downwardly by the punch during retraction of the feed dog and is held upwardly by the spring pad during forward movement of the feed dog, a counter, and means responsive to the counter to lock the punch in down position, thus holding the wire downwardly out of engagement with the reciprocating feed dog.

15. Apparatus for the manufacture of slide fasteners, said apparatus comprising means to intermittently feed a wire having closely spaced interlocking means therealong, said wire feed means comprising a feed cam and feed dog reciprocated thereby for engaging and feeding the wire during its forward movement, a punch movable transversely of the wire to sever the wire downwardly from a piece of the wire projecting beyond the punch, the outline of the punch being such that the projecting piece constitutes a fastener element having a head with spread jaws projecting forwardly therefrom, the head being of such dimension as to fill the space between the jaws, a spring pad beneath the punch to restore the wire to the initial raised position, a punch operating cam, a rocker between the cam and the punch, the timing of the machine being such that the wire is held downwardly by the punch during retraction of the feed dog and is held upwardly by the spring pad during forward movement of the feed dog, a counter, and means responsive to the counter to lock the rocker in outermost position with the punch in down position, thus holding the wire downwardly out of engagement with the reciprocating feed dog.

16. Apparatus for the manufacture of slide fasteners, said apparatus comprising means to intermittently feed a wire, a punch movable transversely of the wire to sever the wire downwardly from a fastener element projecting beyond the punch, a spring pad beneath the punch, and pointed stationary die surfaces beneath the wire at opposite sides of the spring pad cooperating with mating recesses on the sides of the punch for removing triangular shaped pieces of scrap metal on opposite sides of the wire.

17. Apparatus for the manufacture of slide fasteners, said apparatus comprising means to intermittently feed a wire toward a tape, said wire having a series of interlocking means therealong, a punch movable transversely of the wire to sever the wire downwardly from a piece of the wire projecting beyond the punch, the outline of the punch being such that the projecting piece constitutes a fastener element having a head with spread jaws projecting forwardly therefrom, the head being of such dimension as to fill the space between the jaws, a spring pad beneath the punch to restore the wire to the initial raised position, and stationary die surfaces beneath the wire at opposite sides of the spring pad for removing triangular shaped pieces of scrap metal on opposite sides of the wire.

18. Apparatus for the manufacture of slide fasteners, said apparatus comprising means to intermittently feed a wire, punch and die means to so cut the wire as to form fastener elements therefrom and also small pieces of scrap which remain on the die as the punch descends, and means to feed a blast of air continuously at the side of the punch and thence over the top of the die mechanism in order to blow the pieces of scrap outwardly therefrom.

19. Apparatus for the manufacture of slide fasteners, said apparatus comprising means to intermittently feed a wire, said wire having in-

terlocking means thereon, punch and die mechanism to sever the wire, the outline of the punch being such that the severed piece constitutes a fastener element having a head with spread jaws projecting forwardly therefrom, the head being of such dimension as to fill the space between the jaws, additional punch and die surfaces for removing a triangular-shaped piece of scrap metal at the outside of the jaws, which pieces remain on the die as the punch descends, and air blast means for helping transfer the small triangular pieces of scrap to an appropriate receptacle including nozzles to blow air at the sides of the punch and thence outwardly over the top of the die.

20. Apparatus for the manufacture of slide fasteners, said apparatus comprising means to intermittently feed toward a tape a wire having serrated side edges, the serrations of which carry a comparatively thin fin, said wire also having a series of interlocking means, a punch movable transversely of the wire to sever the wire downwardly from a piece of the wire projecting beyond the punch, the outline of the punch being such that the projecting piece constitutes a fastener element having a head with spread jaws projecting forwardly therefrom, the head being of such dimension as to fill the space between the jaws, a spring pad beneath the punch to restore the wire to the initial raised position, and stationary die surfaces beneath the wire at opposite sides of the spring pad for removing the triangular shaped fins or scrap metal on opposite sides of the wire.

21. Apparatus for the manufacture of slide fasteners, said apparatus comprising means to intermittently feed toward a tape a wire having serrated side edges, the serrations of which carry a comparatively thin fin, said wire also having a series of interlocking means, a punch movable transversely of the wire to sever the wire downwardly from a piece of the wire projecting beyond the punch, the outline of the punch being such that the projecting piece constitutes a fastener element having a head with spread jaws projecting forwardly therefrom, the head being of such dimension as to fill the space between the jaws, a spring pad beneath the punch to restore the wire to the initial raised position, stationary die surfaces beneath the wire at opposite sides of the spring pad for removing the triangular shaped fins or scrap metal on opposite sides of the wire, and air blast means for helping remove the small triangular pieces of fin or scrap left on top of said stationary die surfaces, said means including conduits to guide the compressed air to a point above the pieces of scrap at opposite sides of the punch, and to then guide the air and scrap metal away from the punch to an appropriate receptacle.

22. In the manufacture of slide fastener elements comprising a head and spread jaws connected thereto, said jaws being so widely spaced and spread and so shaped as to form a space therebetween large enough to receive the entire head of an identical element, and said jaws being so shaped that when closed the outer edges come into substantially parallel relationship and having approximately perpendicular ends, the method which includes punching away small triangular pieces of scrap or waste at the side edges of a strip in order to give the strip notched or serrated side edges conforming to the square outer ends of spread jaws having the desired shape, the notches or serrations being so closely spaced as to correspond to a series of embryo elements with spread jaws if the head of one element is nested fully within and substantially fills the space within the spread jaws of the next element, and severing the strip on an outline corresponding to the outline of the head and intersecting the inner angle of the triangular notches at the sides of the strip, in order to define elements of the desired shape without scrap or waste other than the aforesaid triangular pieces of scrap.

23. In the manufacture of slide fasteners, the method which includes severing the end of a wire in such configuration as to form a fastener element having a head and spread jaws, the head being of such dimension as to fit between the jaws of the next element, restoring the jaws at the end of the wire and severed element together again in nested relation, the configuration of the head and jaws being such as to interlock the head and jaws against separation longitudinally of the wire, moving the interlocked severed elements toward a tape, and clamping the jaws of the endmost element on the tape to secure the element thereto.

24. Apparatus for the manufacture of slide fastener elements comprising a head and spread jaws connected thereto, said jaws being so widely spaced and spread and so shaped as to form a space therebetween large enough to receive the entire head of an identical element, and said jaws being so shaped that when closed, the outer edges come into substantially parallel relationship, said apparatus comprising means to intermittently feed a wire having the width of the elements with spread jaws, and a single punch and die mechanism, a portion of said punch and die being so shaped as to cut small, triangular pieces of scrap from the side edges of the wire at the end of the wire in order to give the wire notched or serrated side edges conforming to the outer ends of spread jaws having the desired shape, another portion of said punch and die mechanism operating to cut the wire or strip on a line corresponding to the outline of the head and intersecting the inner angle of the triangular notches at the sides of the strip, whereby elements of the desired shape are cut from the wire without waste other than the aforesaid triangular pieces of scrap.

25. Apparatus for the manufacture of slide fasteners, said apparatus comprising means to intermittently feed a tape upwardly, means to intermittently horizontally feed toward the tape a wire having closely spaced projections therealong, said wire feed means including a horizontally reciprocating feed dog for engaging a projection on the wire and thereby feeding the wire, a stationary die and a punch movable downwardly to sever the wire downwardly from a piece of the wire projecting beyond the punch and overlying the stationary die, the outline of the punch and mating die being such that the severed piece constitutes a fastener element having a head with spread jaws projecting forwardly therefrom, a cam and cam follower for reciprocating the punch, a counter, and means responsive to the counter for locking the cam follower in outermost position and thereby interrupting reciprocation of the punch with the punch and wire in down position, and consequently interrupting the supply of severed elements to the tape, without, however, interrupting feed of the tape.

26. Apparatus for the manufacture of slide fasteners, said apparatus comprising means to

intermittently feed a wire toward a tape, said wire having a series of interlocking means thereon, a stationary die and a punch movable transversely of the wire to sever the wire downwardly from a piece of the wire projecting beyond the punch and overlying the die, the outline of the punch and mating die being such that the projecting piece constitutes a fastener element having a head with spread jaws projecting forwardly therefrom, the head being of such dimension as to fill the space between the jaws, a spring pad beneath the punch to restore the wire to the initial raised position, stationary die surfaces beneath the wire at opposite sides of the spring pad cooperating with mating channels on the sides of the punch for removing triangular shaped pieces of scrap on opposite sides of the wire, and air-blast means for helping remove the triangular pieces of scrap left on top of said stationary die surfaces, said means causing a flow of air from the sides of the punch outwardly over the top of the die.

27. Apparatus for the manufacture of slide fasteners, said apparatus comprising means to guide a wire having a width equal to the width of an element with spread jaws, a punch and die operating to sever the wire, said die having a generally key-hole shaped slot for supporting and guiding an upwardly fed tape having a beaded edge, said die further having a convex cutting portion shaped to conform to the head of the element being severed, said die further comprising a depressible spring pad fitting within and mating with said convex cutting portion, said pad lifting the wire clear of the die for forward feed, said punch having a concave side mating with the aforesaid convex die portion, the arrangement being such that, when the punch descends, it severs the wire downwardly from an element supported on the stationary die portion at the end of the wire, the outline of the punch and die being such that the severed piece constitutes a fastener element having a head with spread jaws projecting forwardly therefrom, the head being of such dimension as to fully occupy the space between the jaws without scrap or waste, wire feed means to intermittently feed the wire to the punch and die, each of the repeated feed distances equalling only a small fraction of the length of an element, tape feed means to intermittently feed the tape upwardly, clamping plates closely overlying the die to clamp a severed element on the beaded edge of the tape, and cam means to operate said wire feed means and tape feed means and clamping plates in proper timing.

28. Apparatus for the manufacture of slide fasteners having fastener elements with approximately parallel sides and jaws with ends that are approximately perpendicular to the sides, said apparatus comprising means to guide a wire, a punch and die functioning to cut small, triangular pieces of scrap to give the jaws the desired perpendicular ends, and further functioning to sever the wire, said die having a generally key-hole shaped slot for supporting and guiding an upwardly fed tape having a beaded edge, said die further having a convex cutting portion shaped to conform to the head of the element being severed, said die further comprising two pointed or triangular-shaped pieces for cutting triangular notches in the side edges of the wire, said die further comprising a depressible spring pad fitting within and mating with said convex cutting portion and triangular cutting portions, said pad lifting the wire clear of the die for forward feed, said punch having a concave side mating with the aforesaid convex die portion, said punch further having triangularly grooved channels in the sides mating with the aforesaid triangular die portions, the arrangement being such that, when the punch descends, it severs the wire from an element supported on the stationary die portion at the end of the wire, and further severs the wire from two triangular pieces of scrap supported on the aforesaid triangular die portions, the element and scrap being left stationary on the die while the wire is punched downwardly away from the same, the outline of the punch and die being such that the severed piece constitutes a fastener element.

29. Apparatus for the manufacture of slide fasteners having fastener elements with approximately parallel sides and jaws with ends that are approximately perpendicular to the sides, said apparatus comprising means to guide a wire, punch and die mechanism functioning to cut small triangular shaped pieces of metal from the side of the wire, and further functioning to sever the wire, said die having a generally key-hole shaped slot for supporting and guiding an upwardly fed tape having a beaded edge, said die further having a convex cutting portion shaped to conform to the head of the element being severed, said die further comprising two pointed or triangular shaped side pieces for cutting notches in the side edges of the wire, said die further comprising a depressible spring pad fitting within and mating with said convex cutting portion and triangular cutting portions, said pad lifting the wire clear of the die for forward feed, said punch having a concave side mating with the aforesaid convex die portion, said punch further having triangularly grooved channels in the sides mating with the aforesaid triangular portions, the arrangement being such that, when the punch descends, it severs the wire from an element supported on the stationary die portion at the end of the wire, and further severs the wire from two triangular pieces of scrap supported on the aforesaid triangular die portions, the element and scrap being left stationary on the die while the wire is punched downwardly away from the same, the outline of the severing punch being such that the severed piece constitutes a fastener element having a head with spread jaws, the head being of such dimension as to fill the space between the jaws, and said jaws having the aforesaid approximately perpendicular ends of such dimension that when the jaws are closed their sides are substantially parallel, air-flow means for moving said small triangular pieces of scrap outwardly from the triangular die portions, and feed means to intermittently feed the wire to the punch and die, each of the repeated feed distances equalling only a small fraction of the length of an element.

FREDERICK ULRICH.