(12) INTERNATIONAL APPLICATION PUBLISHED UNDER THE PATENT COOPERATION TREATY (PCT)

(19) World Intellectual Property Organization
International Bureau

(43) International Publication Date
07 September 2018 (07.09.2018)

WIPO | PCT

(10) International Publication Number
WO 2018/159919 A1

(51) International Patent Classification:
A61C 7/28 (2006.01) *A61C 7/20* (2006.01)

(21) International Application Number:
PCT/KR2017/012635

(22) International Filing Date:
09 November 2017 (09.11.2017)

(25) Filing Language: English

(26) Publication Language: English

(30) Priority Data:
10-2017-0027591 03 March 2017 (03.03.2017) KR

(71) Applicant: **EWHA UNIVERSITY - INDUSTRY COLLABORATION FOUNDATION** [KR/KR]; (Ewha University, Daehyeon-dong), 52 Ewhayeodaegil, Seodaemun-gu, Seoul 03760 (KR).

(72) Inventors: **CHUN, Youn Sic**; (Beoksan Blueming Apt., Bongcheon-dong), No. 208-1401, 93, Euncheon-ro, Gwanak-gu, Seoul 08715 (KR). **KIM, Min Ji**; (Hyundai Apt., Apgujeong-dong), No. 203-704, 57, Apgujeong-ro 29-gil, Gangnam-gu, Seoul 06005 (KR).

(74) Agent: **MUHANN PATENT & LAW FIRM**; (Myeonglim Building, Nonhyeon-dong), 5th Floor, 9 Hakdong-ro 3-gil, Gangnam-gu, Seoul 06044 (KR).

(81) Designated States *(unless otherwise indicated, for every kind of national protection available)*: AE, AG, AL, AM, AO, AT, AU, AZ, BA, BB, BG, BH, BN, BR, BW, BY, BZ, CA, CH, CL, CN, CO, CR, CU, CZ, DE, DJ, DK, DM, DO, DZ, EC, EE, EG, ES, FI, GB, GD, GE, GH, GM, GT, HN, HR, HU, ID, IL, IN, IR, IS, JO, JP, KE, KG, KH, KN, KP, KW, KZ, LA, LC, LK, LR, LS, LU, LY, MA, MD, ME, MG, MK, MN, MW, MX, MY, MZ, NA, NG, NI, NO, NZ, OM, PA, PE, PG, PH, PL, PT, QA, RO, RS, RU, RW, SA, SC, SD, SE, SG, SK, SL, SM, ST, SV, SY, TH, TJ, TM, TN, TR, TT, TZ, UA, UG, US, UZ, VC, VN, ZA, ZM, ZW.

WO 2018/159919 A1

(54) Title: COVER AND ORTHODONTIC DEVICE HAVING THE COVER

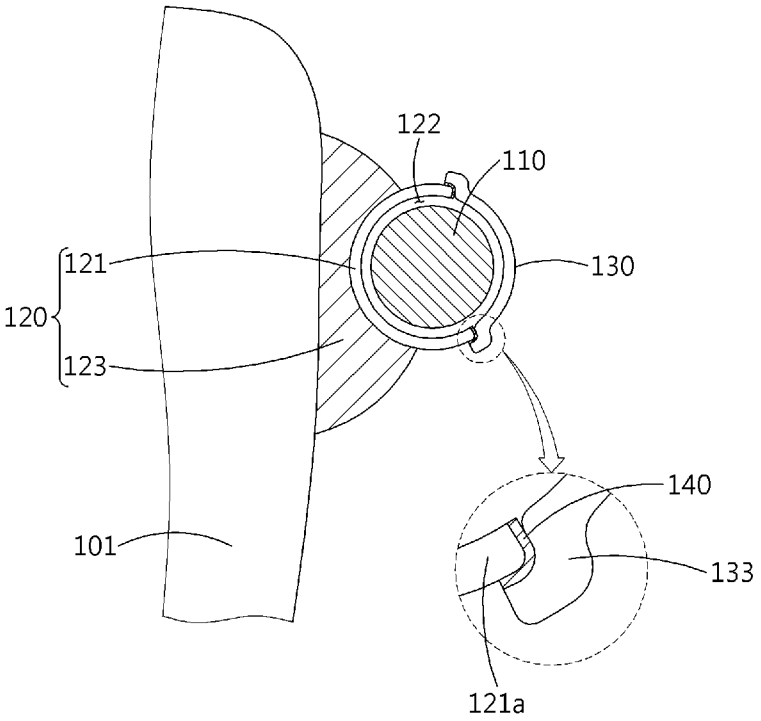

(57) Abstract: Provided is an orthodontic device including a wire for orthodontic treatment of teeth; a wire fixer configured to fix the wire to a tooth to be movable in a lengthwise direction of the wire and to be open in one direction to allow an access of the wire; and a cover configured to selectively attach to or detach from the wire fixer to cover the wire by covering an open portion of that is open in the wire fixer. Through this configuration, a process of positioning the wire relative to the wire fixer may be performed smoothly by positioning the wire relative to the wire fixer using the open portion of the wire fixer and by covering the open portion of the wire fixer with the cover.

[Continued on next page]

(84) Designated States *(unless otherwise indicated, for every kind of regional protection available)*: ARIPO (BW, GH, GM, KE, LR, LS, MW, MZ, NA, RW, SD, SL, ST, SZ, TZ, UG, ZM, ZW), Eurasian (AM, AZ, BY, KG, KZ, RU, TJ, TM), European (AL, AT, BE, BG, CH, CY, CZ, DE, DK, EE, ES, FI, FR, GB, GR, HR, HU, IE, IS, IT, LT, LU, LV, MC, MK, MT, NL, NO, PL, PT, RO, RS, SE, SI, SK, SM, TR), OAPI (BF, BJ, CF, CG, CI, CM, GA, GN, GQ, GW, KM, ML, MR, NE, SN, TD, TG).

Published:

— *with international search report (Art. 21(3))*

Description

Title of Invention: COVER AND ORTHODONTIC DEVICE HAVING THE COVER

Technical Field

[1] At least one example embodiment relates to a cover and an orthodontic device having the cover. More particularly, at least one example embodiment relates to a cover that may smoothly perform a process of positioning a wire relative to a wire fixer by positioning the wire relative to the wire fixer using an open portion of the wire fixer and by covering the open portion of the wire fixer with the cover, and an orthodontic device having the cover.

Background Art

[2] In general, a non-uniform dental alignment state or a non-uniform malocclusion of teeth may cause developmental abnormalities of the teeth, developmental disorders of the jawbone, and the like. People with irregular dental alignment or malocclusion may cover their mouth with a hand when having a conversation or laughing with others, and also may be passive in interpersonal relationships, which may lead to making it difficult to have a decent social life.

[3] In addition, when eating food, the food may not be uniformly crushed and may be stuck between teeth, which may result in various types of dental diseases or digestive system diseases.

[4] To outperform the above issues, disclosed is an orthodontic technique for applying a constant force to teeth, modifying an alveolar bone that surrounds the teeth, and causing a movement of teeth.

[5] For example, as disclosed in Korean Patent Application No. 10-2013-0064601, a conventional orthodontic device to which the orthodontic technique is applied may include a plurality of orthodontic brackets individually attached to the front of the respective teeth and a wire configured to connect and fix the orthodontic brackets.

[6] Further describing, an insertion hole through which the wire is inserted is formed on each orthodontic bracket. Thus, once the orthodontic brackets are attached to the front of teeth, the wire may couple with the orthodontic brackets in the oral cavity.

[7] However, in the conventional orthodontic device, since the bracket is attached and the wire is fixed, a mounting process may be complex and pain may arise during the mounting process. In addition, since the bracket is generally formed using a metal material, a user may have a feeling of irritation. In addition, interference may occur between an inner portion of the tongue or lips and a corner portion of the bracket, which may cause injury.

[8] Meanwhile, a technique for forming a bracket in a tube shape similar to a shape of a needle and inserting a wire into a slot of the bracket has been studied and commercialized. However, it is not easy to manufacture a tube-shaped bracket having a very thin slot. In addition, a process of inserting the wire into the thin slot is also difficult. Accordingly, difficulty may arise in an actual application.

Disclosure of Invention

Technical Problem

[9] At least one example embodiment provides a cover that may smoothly perform a process of positioning a wire relative to a wire fixer by positioning the wire relative to the wire fixer using an open portion of the wire fixer and by covering the open portion of the wire fixer with the cover, and an orthodontic device having the cover.

[10] At least one example embodiment also provides a cover that may simplify a configuration for orthodontic treatment by preparing a wire fixer and a cover using resin instead of using a conventional bracket structure and may reduce a feeling of irritation and may also prevent injury from occurring in the tongue or oral cavity due to a curved structure formed by the wire fixer and the cover, and an orthodontic device having the cover.

Solution to Problem

[11] According to an aspect of at least one example embodiment, there is provided an orthodontic device including a wire for orthodontic treatment of teeth; a wire fixer configured to fix the wire to a tooth to be movable in a lengthwise direction of the wire and to be open in one direction to allow an access of the wire; and a cover configured to selectively attach to or detach from the wire fixer to cover the wire by covering an open portion that is open in the wire fixer. Through this configuration, a process of positioning the wire relative to the wire fixer may be performed smoothly by positioning the wire relative to the wire fixer using the open portion of the wire fixer and by covering the open portion of the wire fixer with the cover.

[12] The wire fixer may be formed using resin to include an inner groove corresponding to an outer shape of the wire and fixed to the tooth and the wire may be led in a direction of the inner groove and positioned in the wire fixer.

[13] The open portion may be an open portion of the inner groove, a width of the open portion may be relatively small compared to a diameter of the wire or a maximum width of a vertical cross-section of the wire, and the cover may be attached to an outer surface of the wire fixer that forms the open portion.

[14] The cover may be a resin tape that is manufactured using resin having flexibility, and an adhesive configured to attach the cover to the wire fixer may be provided between inner surfaces of both ends of the cover and the wire fixer.

[15] Both ends of the cover may be attached to the wire fixer by photo-polymerization of a photo-polymerizer.

[16] The cover may include a cover portion prepared using resin, having a width corresponding to a width of the wire fixer, and having a curved outer surface; and a protruding portion protruding from an inner surface of the cover portion to insert into the open portion.

[17] An inner surface of an inner space formed by the wire fixer and the cover and an outer surface of the wire may be separate and the wire may be movable in the lengthwise direction of the wire relative to the wire fixer.

[18] The orthodontic device may further include an adhesive tool configured to detachably apply the cover to the wire fixer.

[19] The wire fixer may include a perforated tube through which a portion of the wire is inserted; and a resin fixing member configured to fix the perforated tube to the tooth.

[20] The cover may be disposable.

[21] According to an aspect of at least one example embodiment, there is provided a cover configured to detachably apply to a wire fixer into which a wire for orthodontic treatment of teeth is inserted and having an open portion through which a portion of the wire is exposed. Inner surfaces of both ends of the cover are selectively attached to or detached from an outer surface of the wire fixer that forms the open portion.

[22] The cover may be a resin tape that is manufactured using resin having flexibility, and an adhesive configured to attach the inner surfaces of the both ends of the cover to the wire fixer may be provided between the inner surfaces of the both ends and the wire fixer.

[23] The cover may be configured to have a width of 1.5 to 3.5 mm and a thickness of 0.1 to 0.4 mm.

[24] The cover may be provided through cutting or through perforating along a perforated line so that the cover has the width or the thickness.

[25] The cover may include a cover portion prepared using resin, having a width corresponding to a width of the wire fixer, and having a curved outer surface; and a protruding portion protruding from an inner surface of the cover portion to insert into the open portion.

Advantageous Effects of Invention

[26] According to example embodiments, it is possible to smoothly perform a process of positioning a wire relative to a wire fixer by positioning the wire relative to the wire fixer using an open portion of the wire fixer and by covering the open portion of the wire fixer with a cover.

[27] According to example embodiments, it is possible to simplify a configuration for or-

thodontic treatment by preparing a wire fixer and a cover using resin instead of using a conventional bracket structure and to reduce a feeling of irritation and also to prevent injury from occurring in the tongue or oral cavity due to a curved structure formed by the wire fixer and the cover.

Brief Description of Drawings

[28] Fig. 1 illustrates a state in which an orthodontic device according to an example embodiment is provided to a tooth.

[29] Fig. 2 is a cross-sectional view of Fig. 1 observed at the side.

[30] Fig. 3 is a perspective view of a cover of Fig. 1.

[31] Fig. 4 illustrates a state in which an orthodontic device according to another example embodiment is provided to a tooth.

[32] Fig. 5 is a cross-sectional view of Fig. 4 observed at the side.

[33] Fig. 6a is a top view of the cover of Fig. 5 and Fig. 6b is a rear view of the cover of Fig. 5.

Mode for the Invention

[34] Hereinafter, some example embodiments will be described in detail with reference to the accompanying drawings. Regarding the reference numerals assigned to the elements in the drawings, it should be noted that the same elements will be designated by the same reference numerals, wherever possible, even though they are shown in different drawings. Also, in the description of example embodiments, detailed description of well-known related structures or functions will be omitted when it is deemed that such description will cause ambiguous interpretation of the present disclosure.

[35] In addition, terms such as first, second, A, B, (a), (b), and the like may be used herein to describe components. Each of these terminologies is not used to define an essence, order or sequence of a corresponding component but used merely to distinguish the corresponding component from other component(s). It should be noted that if it is described in the specification that one component is "connected", "coupled", or "joined" to another component, a third component may be "connected", "coupled", and "joined" between the first and second components, although the first component may be directly connected, coupled or joined to the second component.

[36] A component having a common function with a component included in one example embodiment is described using a like name in another example embodiment. Unless otherwise described, a description made in one example embodiment may be applicable to another example embodiment and a detailed description within a duplicate range is omitted.

[37] Fig. 1 illustrates a state in which an orthodontic device according to an example em-

bodiment is provided to a tooth, Fig. 2 is a cross-sectional view of Fig. 1 observed at the side, and Fig. 3 is a perspective view of a cover of Fig. 1.

[38] Referring to Figs. 1 through 3, an orthodontic device 100 may include a wire 110 for orthodontic treatment of a tooth 101, a wire fixer 120 configured to position the wire 110 relative to the tooth 101 so that a portion of the wire 110 is exposed, and a cover 130 configured to selectively attach to or detach from the wire fixer 120 to cover the exposed wire 110.

[39] Through this configuration, the wire 110 for orthodontic treatment of teeth may be easily provided to the tooth 101, and if necessary, a process of replacing the wire 110 may be simply performed.

[40] Hereinafter, each configuration is described. Referring to Figs. 1 and 2, the wire 110 of the example embodiment couples with the wire fixer 120 fixed on a surface of the tooth 101. Accordingly, the orthodontic treatment of teeth may be performed by appropriately adjusting a force between the tooth 101 to which each corresponding wire fixer 120 is provided.

[41] The wire 110 may have various diameters. In the example embodiment, the wire 110 may have a diameter of, for example, 0.007 to 0.022 inches, desirably, 0.008 to 0.012 inches. Compared to a general diameter of the wire 110 according to the related art, the wire 110 according to the example embodiment may have a relatively small diameter, however, may transfer a proper force to the tooth 101. In addition, due to the relatively small diameter, the wire 110 may minimize a feeling of irritation. It is provided as an example, and a diameter and a shape of the wire 110 are not limited thereto. Although not illustrated, the wire 110 may be configured to have a quadrangular cross-section, for example, a square cross-section or a rectangular cross-section.

[42] The wire 110 may be manufactured as a shape memory alloy to store a shape of the wire 101 based on a shape of the tooth 101 corresponding to an orthodontic target. For example, Ni-Ti alloy, etc., which is harmless to the human body, may be applicable. Accordingly, once the orthodontic device 100 is provided to the tooth 101, the wire 110 is transformed to a stored shape and thus, the orthodontic treatment of teeth may be performed. Here, the wire 110 needs to be movable relative to the wire fixer 120 to be transformed to the stored shape.

[43] Meanwhile, as described above, in the related art, when a wire fixer for a wire is in a tube type, a process of inserting the wire is difficult due to a very narrow inner diameter of a tube. Thus, a process of removing the wire as well as a process of providing the wire is difficult.

[44] In the example embodiment, referring to Figs. 1 through 3, since one side of the wire fixer 120 is open, it is possible to easily provide and remove the wire 110 relative to the wire fixer 120. In addition, it is possible to prevent the wire 110 positioned in the

wire fixer 120 from being exposed to an outside and from being deviated by covering an open portion of the wire fixer 120 with a cover 130.

[45] Referring to Fig. 2, the wire fixer 120 may include a perforated tube 121 through which a portion of the wire 110 is inserted and a resin fixing member 123 configured to fix the perforated tube 121 to the tooth 101.

[46] Here, the perforated tube 121 may be prepared by perforating a pipe-shaped tube in a lengthwise direction. The perforated tube 121 may include an inner groove 122 in which the wire 110 is positioned and an open portion 121a that is used as an access to the inner groove 122. Through this configuration, the wire 110 may be led in and thereby positioned in the inner groove 122 through the open portion 121a of the perforated tube 121. Here, a width of the open portion 121a is relatively small compared to a diameter of the wire 110 or a maximum length of a vertical cross-section of an angular wire. Accordingly, it is possible to prevent the wire 110 within the wire fixer 120 from being arbitrarily deviated from the wire fixer 120.

[47] In the related art, since the wire 110 is to be positioned in a lengthwise direction of a tube, a corresponding process is difficult. On the contrary, in the example embodiment, since it is possible to lead the wire 110 in or take the wire 110 from the perforated tube 121 of the perforated wire fixer 120, the wire 110 may be further easily provided.

[48] The perforated tube 121 may be fixed to the tooth 101 by the resin fixing member 123 formed using resin. By providing the resin fixing member 123 having flexibility on a surface of the tooth 101 and by positioning the perforated tube 121 relative to the resin fixing member 123, the perforated tube 121 may firmly couple with the resin fixing member 123 through photo-polymerization by a photo-polymerizer (not shown).

[49] Here, a configuration of the wire fixer 120 is provided as an example only and is not limited thereto. Although not illustrated, the wire fixer 120 may be manufactured using resin to have an inner groove corresponding to a shape of the wire 110. That is, when the wire fixer 120 having the inner groove 122 and the open portion 121a is manufactured using resin, the wire fixer 120 may be attached to the tooth 101. Here, an adhesive material using resin may be applied over one surface of the wire fixer 120 that faces the surface of the tooth 101 and the wire fixer 120 may be fixed to the tooth 101 using a photo-polymerization scheme.

[50] Meanwhile, although the wire 110 may easily couple with the wire fixer 120, the wire 110 may be deviated from the wire fixer 120 since the open portion 121a of the wire fixer 120 is relatively small compared to a diameter of the wire 110 and in this state, the wire 110 is exposed through the open portion 121a of the wire fixer 120.

[51] To prevent this, the cover 130 may be selectively attached to the wire fixer 120. Also, the cover 130 may be easily detached from the wire fixer 120 for repositioning of the wire 110 or replacement of the wire 110. That is, it is possible to easily attach the

cover 130 to the wire fixer 120 and if necessary, it is possible to detach the cover 130 from the wire fixer 120.

[52] Referring to Fig. 2, the cover 130 may be selectively attached to the open portion 121a of the wire fixer 120. Here, the cover 130 is attached in such a manner that inner surfaces of both ends 133 of the cover 130 overlap the open portion 121a of the wire fixer 120. Here, the cover 130 may be attached to the wire fixer 120 by positioning the cover 130 relative to the wire fixer 120 as shown in Fig. 2 and by applying a photo-polymerization using the photo-polymerizer.

[53] However, it is provided as an example only. Coupling between the cover 130 and the wire fixer 120 may be performed by providing an adhesive 140 for adhesion between the inner surfaces of the both ends 133 of the cover 130 and a surface that forms the open portion 121a of the wire fixer 120.

[54] Through the above coupling schemes, the cover 130 may maintain an attached state with the wire fixer 120 with a coupling force capable of preventing the wire 110 from being deviated from the wire fixer 120. The cover 130 is disposable and may be easily removed by an operator. As described above, the wire 110 may need to be removed from the wire fixer 120 to reposition or replace the wire 110. Here, the operator may easily remove the cover 130 attached to the wire fixer 120 from the wire fixer 120 and may easily perform a necessary operation.

[55] Referring to Fig. 3, the cover 130 may be provided as a resin tape that includes a curved surface 131. The cover 130 may have a width of 1.5 to 3.5 mm corresponding to a width of the wire fixer 120 and may have a thickness of 0.1 to 0.4 mm. Desirably, the cover 130 may have a width of 2 mm and a thickness of 0.3 mm.

[56] The cover 130 may be manufactured using a variety of schemes. For example, the cover 130 may be manufactured by cutting a raw material that is prepared by connecting a plurality of covers 130. That is, a rolled raw material may be cut in the aforementioned size and thereby used. Here, the resin tape has flexibility and rigidity. Thus, a curved structure may be configured by bending the resin tape. The cover 130 may be provided through cutting.

[57] Alternatively, the plurality of covers 130 may be connected using a perforated line. Accordingly, an individual cover 130 may be provided by perforating a perforated line portion and the cover 130 may be bent and be applied as the cover 130 according to the example embodiment.

[58] Meanwhile, an inner shape formed when the cover 130 is attached to the wire fixer 120 may correspond to a cross-sectional shape of the wire 110 of Fig. 2. Here, an inner surface of the inner groove 122 of the wire fixer 120 and an outer surface of the wire 110 may be separate from each other. Accordingly, the wire 110 may couple with the wire fixer 120 and may move in the lengthwise direction of the wire 110 relative to the

wire fixer 120, thereby providing an orthodontic force to the tooth 101.

[59] According to example embodiments, it is possible to smoothly perform a process of positioning the wire 110 relative to the wire fixer 120 by positioning the wire 110 relative to the wire fixer 110 through the open portion 121a of the wire fixer 120 and by covering the open portion 121a of the wire fixer 120 with the cover 130.

[60] In addition, since the wire fixer 120 and the cover 130 are provided using resin instead of using a conventional bracket structure, a configuration for orthodontic treatment of teeth may be simplified compared to the related art. Further, due to a curved structure formed by the wire fixer 120 and the cover 130, a feeling of irritation may barely occur and it is possible to prevent injury from occurring in the tongue or the oral cavity.

[61] Hereinafter, an orthodontic device according to another example embodiment is described. Here, a description related to the substantially same configuration as the aforementioned orthodontic device is omitted.

[62] Fig. 4 illustrates a state in which an orthodontic device according to another example embodiment is provided to a tooth, Fig. 5 is a cross-sectional view of Fig. 4 observed at the side, and Fig. 6a is a top view of the cover of Fig. 5 and Fig. 6b is a rear view of the cover of Fig. 5.

[63] Referring to Fig. 4 through Fig. 6b, an orthodontic device 200 may include a wire 210, a wire fixer 220, and a cover 230. A configuration of the cover 230 may slightly differ from the aforementioned shape and configuration of the cover 130 of Fig. 2. In addition, the orthodontic device 200 may further include an adhesive tool 250 configured to position the cover 230 relative to the wire fixer 220.

[64] Referring to Fig. 5 and Figs. 6A and 6B, the cover 230 may include a cover portion 231 having a width corresponding to a width of the wire fixer 220 and having a curved outer surface and a protruding portion 232 that protrudes from an inner surface of the cover portion 231 to insert into an open portion 221a of the wire fixer 220.

[65] Referring to Fig. 5, the cover 230 configured as above may be attached to the wire fixer 220 by the adhesive tool 250. Here, the protruding portion 232 may insert into the open portion 221a of the wire fixer 220 and inner surfaces of both ends of the cover portion 231 may be attached to the wire fixer 220. Here, coupling between the cover 230 and the wire fixer 220 may be firmly performed by providing an adhesive 240 between an inner surface of the cover portion 231 and the wire fixer 220.

[66] An individual cover 230 may be manufactured in a shape of Figs. 6A and 6B, and may be manufactured by cutting a raw material that extends the cover portion 231 and the protruding portion 232 or by perforating a perforated portion. Desirably, the cover 230 may be configured to have a horizontal width of 2 mm and a vertical width of 3 mm and a thickness of 0.25 mm. However, it is provided as an example only.

[67] The cover 230 is configured to couple with the wire fixer 220 by inserting the protruding portion 232 into the wire fixer 220. Accordingly, a coupling force between the cover 230 and the wire fixer 220 may be further firmed. In addition, it is possible to easily attach or detach the cover 230 to or from the wire fixer 220 using the adhesive tool 250. Accordingly, if necessary, an operation of replacing the wire 210 may be further readily performed.

[68] A number of example embodiments have been described above. Nevertheless, it should be understood that various modifications may be made to these example embodiments. For example, suitable results may be achieved if the described techniques are performed in a different order and/or if components in a described system, architecture, device, or circuit are combined in a different manner and/or replaced or supplemented by other components or their equivalents. Accordingly, other implementations are within the scope of the following claims.

Claims

[Claim 1] An orthodontic device comprising:
a wire for orthodontic treatment of teeth;
a wire fixer configured to fix the wire to a tooth to be movable in a lengthwise direction of the wire and to be open in one direction to allow an access of the wire; and
a cover configured to selectively attach to or detach from the wire fixer to cover the wire by covering an open portion that is open in the wire fixer.

[Claim 2] The orthodontic device of claim 1, wherein the wire fixer is formed using resin to include an inner groove corresponding to an outer shape of the wire and fixed to the tooth and the wire is led in a direction of the inner groove and positioned in the wire fixer.

[Claim 3] The orthodontic device of claim 2, wherein the open portion is an open portion of the inner groove,
a width of the open portion is relatively small compared to a diameter of the wire or a maximum width of a vertical cross-section of the wire, and
the cover is attached to an outer surface of the wire fixer that forms the open portion.

[Claim 4] The orthodontic device of claim 3, wherein the cover is a resin tape that is manufactured using resin having flexibility, and
an adhesive configured to attach the cover to the wire fixer is provided between inner surfaces of both ends of the cover and the wire fixer.

[Claim 5] The orthodontic device of claim 3, wherein both ends of the cover are attached to the wire fixer by photo-polymerization of a photo-polymerizer.

[Claim 6] The orthodontic device of claim 1, wherein the cover comprises:
a cover portion prepared using resin, having a width corresponding to a width of the wire fixer, and having a curved outer surface; and
a protruding portion protruding from an inner surface of the cover portion to insert into the open portion.

[Claim 7] The orthodontic device of claim 1, wherein an inner surface of an inner space formed by the wire fixer and the cover and an outer surface of the wire are separate and the wire is movable in the lengthwise direction of the wire relative to the wire fixer.

[Claim 8] The orthodontic device of claim 1, further comprising:

an adhesive tool configured to detachably apply the cover to the wire fixer.

[Claim 9] The orthodontic device of claim 1, wherein the wire fixer comprises:
a perforated tube through which a portion of the wire is inserted; and
a resin fixing member configured to fix the perforated tube to the tooth.

[Claim 10] The orthodontic device of claim 1, wherein the cover is disposable.

[Claim 11] A cover configured to detachably apply to a wire fixer into which a wire for orthodontic treatment of teeth is inserted and having an open portion through which a portion of the wire is exposed, wherein inner surfaces of both ends of the cover are selectively attached to or detached from an outer surface of the wire fixer that forms the open portion.

[Claim 12] The cover of claim 11, wherein the cover is a resin tape that is manufactured using resin having flexibility, and
an adhesive configured to attach the inner surfaces of the both ends of the cover to the wire fixer is provided between the inner surfaces of the both ends and the wire fixer.

[Claim 13] The cover of claim 11, wherein the cover is configured to have a width of 1.5 to 3.5 mm and a thickness of 0.1 to 0.4 mm.

[Claim 14] The cover of claim 13, wherein the cover is provided through cutting or through perforating along a perforated line so that the cover has the width or the thickness.

[Claim 15] The cover of claim 11, comprising:
a cover portion prepared using resin, having a width corresponding to a width of the wire fixer, and having a curved outer surface; and
a protruding portion protruding from an inner surface of the cover portion to insert into the open portion.

[Fig. 1]

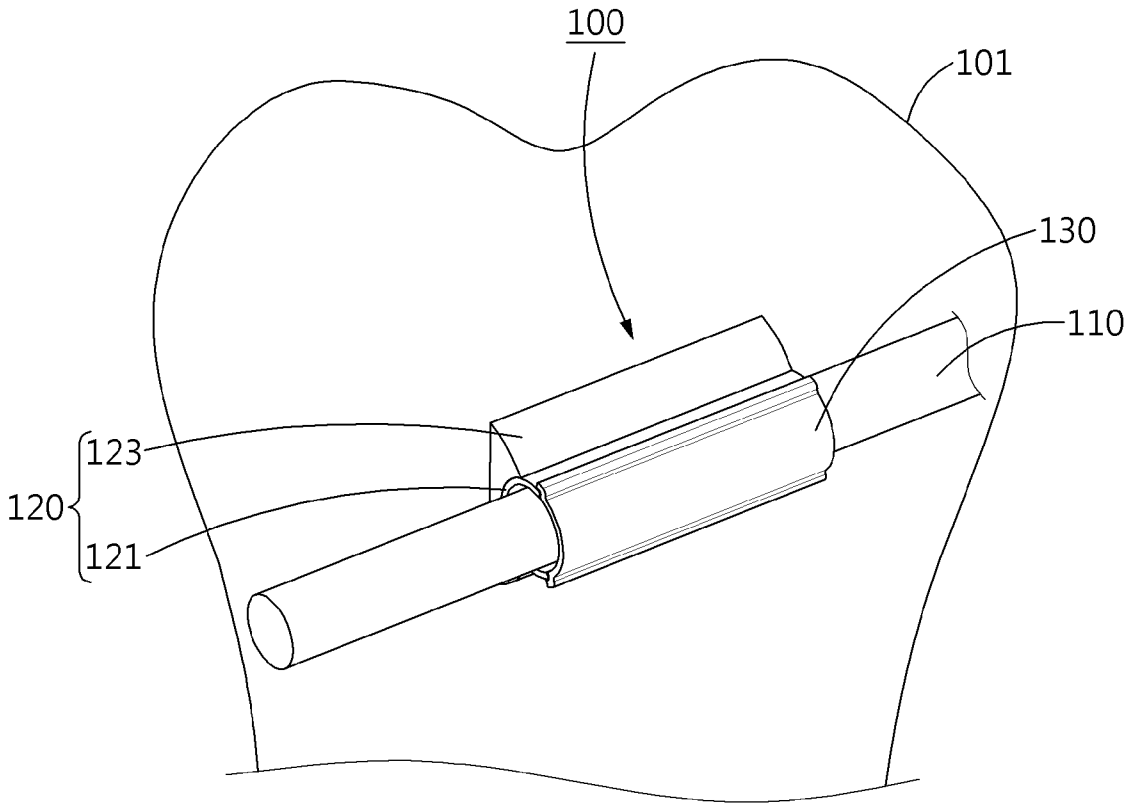
100
101
130
110
123
120
121

[Fig. 2]

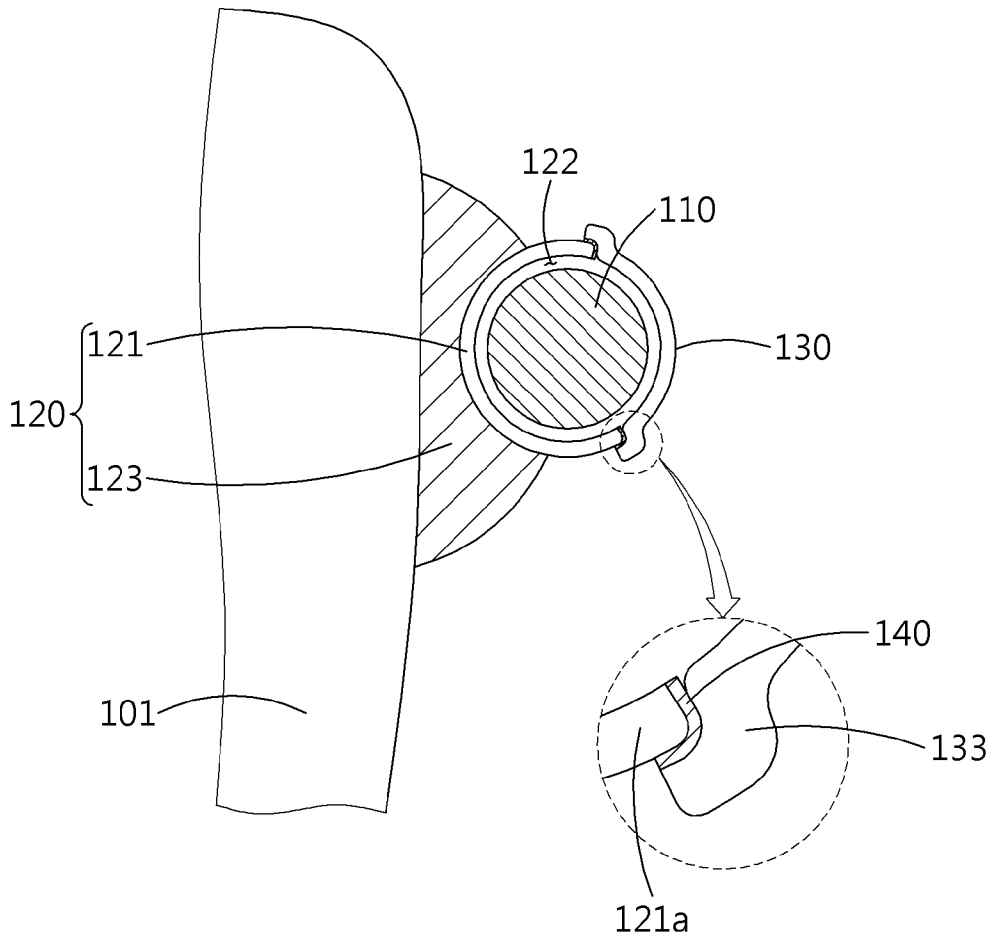
122
110
121
130
120
123
140
101
133
121a

[Fig. 3]

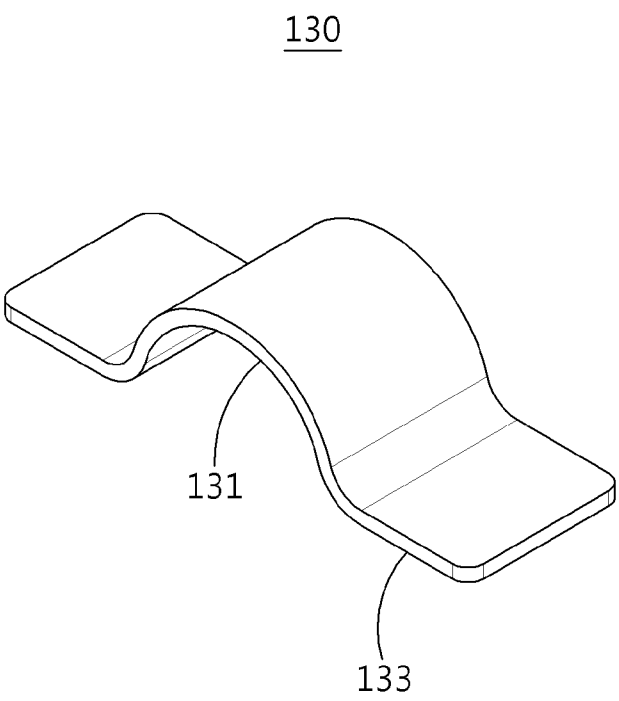

[Fig. 4]

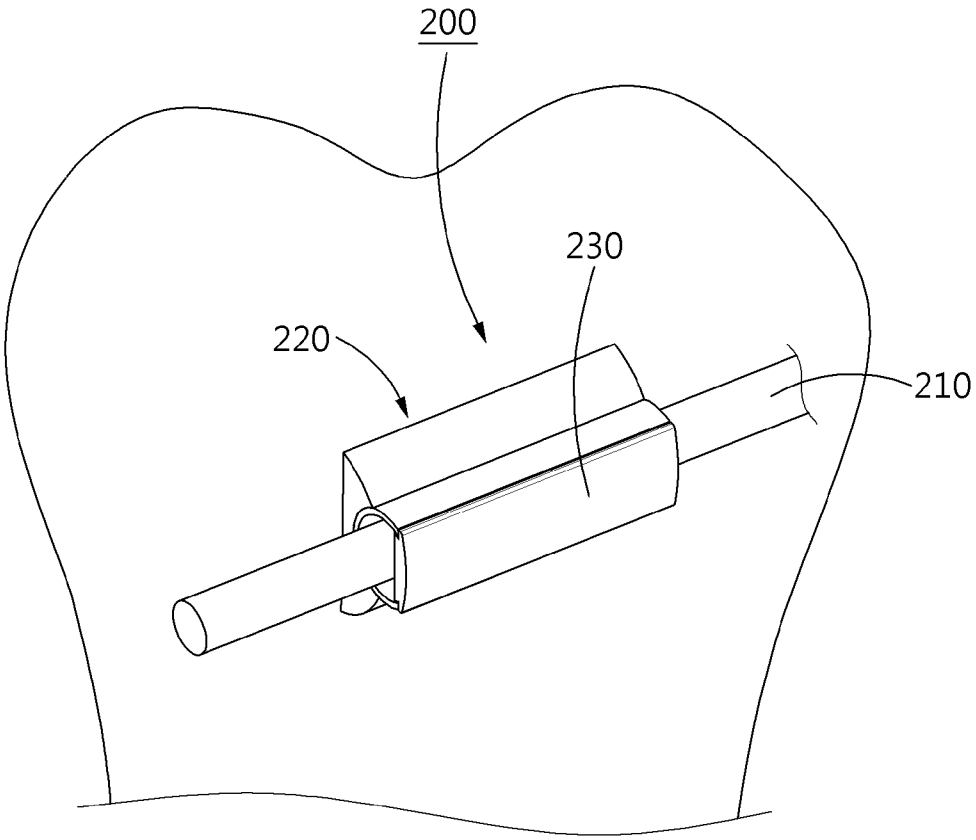

[Fig. 5]

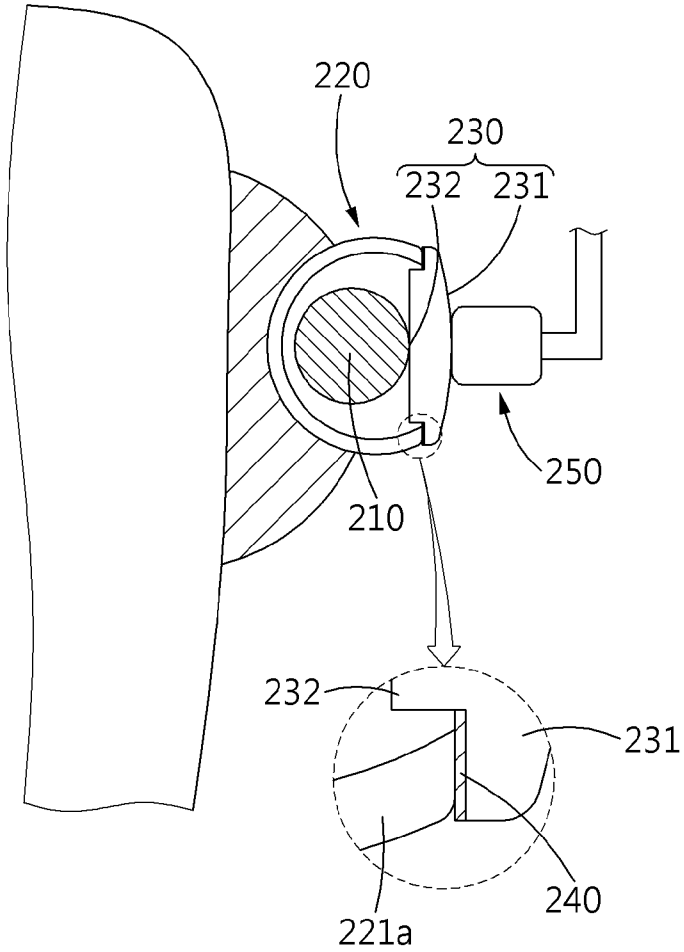

[Fig. 6a]

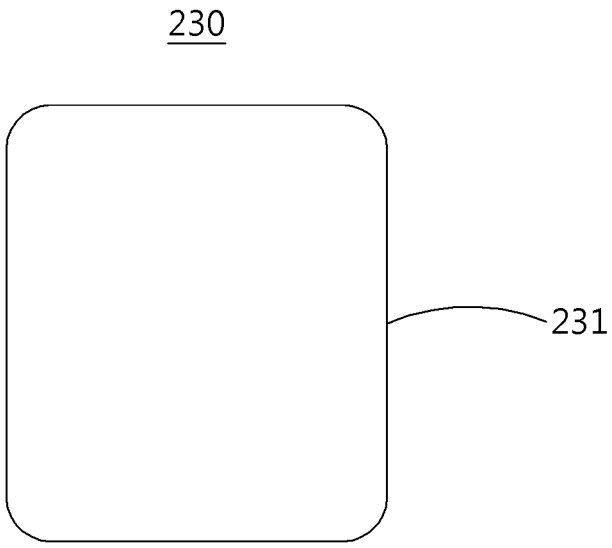

[Fig. 6b]

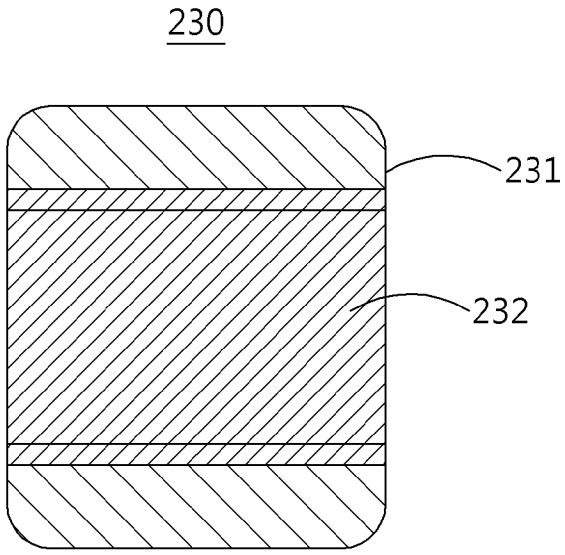

INTERNATIONAL SEARCH REPORT

International application No.
PCT/KR2017/012635

A. CLASSIFICATION OF SUBJECT MATTER

A61C 7/28(2006.01)i, A61C 7/20(2006.01)i

According to International Patent Classification (IPC) or to both national classification and IPC

B. FIELDS SEARCHED

Minimum documentation searched (classification system followed by classification symbols)
A61C 7/28; A61C 7/12; A61C 7/20; A61C 7/00; A61C 1/00; A61C 3/00; A61C 7/14; A61C 7/34

Documentation searched other than minimum documentation to the extent that such documents are included in the fields searched
Korean utility models and applications for utility models
Japanese utility models and applications for utility models

Electronic data base consulted during the international search (name of data base and, where practicable, search terms used)
eKOMPASS(KIPO internal) & Keywords: orthodontic bracket, wire, slot, cover, resin tape

C. DOCUMENTS CONSIDERED TO BE RELEVANT

Category*	Citation of document, with indication, where appropriate, of the relevant passages	Relevant to claim No.
X	US 2007-0099145 A1 (ABELS, N. et al.) 03 May 2007 See claims 1-15; paragraphs [0029]-[0039]; figures 1A-4B.	1-3,6-11,13-15
Y		4,5,12
Y	US 2007-0054230 A1 (BREZNIAK, N.) 08 March 2007 See claims 1-20; paragraph [0032]; figures 8-11.	4,5,12
X	US 4355975 A (FUJITA, K.) 26 October 1982 See claims 1-7; figures 1-5.	1,11
X	US 2013-0196281 A1 (THORNTON, J. D.) 01 August 2013 See claims 1-20; figures 1-7.	1,11
X	US 2005-0244776 A1 (ABELS, N. et al.) 03 November 2005 See claims 1-18; figures 1A-5B.	1,11
X	US 2008-0261164 A1 (ANTIGNANO, G. et al.) 23 October 2008 See claims 1-5; figures 1-4.	1,11
X	KR 10-2012-0014565 A (TOMY INC.) 17 February 2012 See claims 1-9; figures 1-20.	1,11

☒ Further documents are listed in the continuation of Box C. ☒ See patent family annex.

* Special categories of cited documents:
"A" document defining the general state of the art which is not considered to be of particular relevance
"E" earlier application or patent but published on or after the international filing date
"L" document which may throw doubts on priority claim(s) or which is cited to establish the publication date of another citation or other special reason (as specified)
"O" document referring to an oral disclosure, use, exhibition or other means
"P" document published prior to the international filing date but later than the priority date claimed
"T" later document published after the international filing date or priority date and not in conflict with the application but cited to understand the principle or theory underlying the invention
"X" document of particular relevance; the claimed invention cannot be considered novel or cannot be considered to involve an inventive step when the document is taken alone
"Y" document of particular relevance; the claimed invention cannot be considered to involve an inventive step when the document is combined with one or more other such documents,such combination being obvious to a person skilled in the art
"&" document member of the same patent family

Date of the actual completion of the international search	Date of mailing of the international search report
13 February 2018 (13.02.2018)	**13 February 2018 (13.02.2018)**

Name and mailing address of the ISA/KR
International Application Division
Korean Intellectual Property Office
189 Cheongsa-ro, Seo-gu, Daejeon, 35208, Republic of Korea
Facsimile No. +82-42-481-8578

Authorized officer
HAN, Inho
Telephone No. +82-42-481-3362

INTERNATIONAL SEARCH REPORT

International application No.
PCT/KR2017/012635

C (Continuation). DOCUMENTS CONSIDERED TO BE RELEVANT

Category*	Citation of document, with indication, where appropriate, of the relevant passages	Relevant to claim No.
X	KR 10-2012-0110982 A (JUNG, J. W.) 10 October 2012 See claims 1-10; figures 1-6.	1,11
X	KR 10-1505424 B1 (SYINNOVATION) 25 March 2015 See claim 1; paragraphs [0023]-[0029]; figures 1-7.	1,11

INTERNATIONAL SEARCH REPORT

Information on patent family members

International application No.

PCT/KR2017/012635

Patent document cited in search report	Publication date	Patent family member(s)	Publication date
US 2007-0099145 A1	03/05/2007	AU 2005-279300 A1	09/03/2006
		CN 101014298 A	08/08/2007
		EP 1796572 A1	20/06/2007
		JP 2008-511359 A	17/04/2008
		KR 10-2007-0070169 A	03/07/2007
		US 2006-0046223 A1	02/03/2006
		US 7134872 B2	14/11/2006
		WO 2006-024539 A1	09/03/2006
US 2007-0054230 A1	08/03/2007	US 2009-0068610 A1	12/03/2009
US 4355975 A	26/10/1982	JP 56-112238 A	04/09/1981
		JP 6322825 B2	13/05/1988
US 2013-0196281 A1	01/08/2013	US 2016-0000528 A1	07/01/2016
		US 9113983 B2	25/08/2015
		US 9622836 B2	18/04/2017
US 2005-0244776 A1	03/11/2005	US 7094052 B2	22/08/2006
		WO 2005-104983 A1	10/11/2005
US 2008-0261164 A1	23/10/2008	EP 1982669 A1	22/10/2008
KR 10-2012-0014565 A	17/02/2012	CN 102427775 A	25/04/2012
		CN 102427775 B	27/08/2014
		JP 5319765 B2	16/10/2013
		US 2012-0058443 A1	08/03/2012
		US 8920164 B2	30/12/2014
		WO 2010-131368 A1	18/11/2010
KR 10-2012-0110982 A	10/10/2012	None	
KR 10-1505424 B1	25/03/2015	KR 10-2015-0009765 A	27/01/2015