(No Model.) 2 Sheets—Sheet 1.

G. V. BARNES.

ELEVATOR.

No. 590,655. Patented Sept. 28, 1897.

Fig. 1.

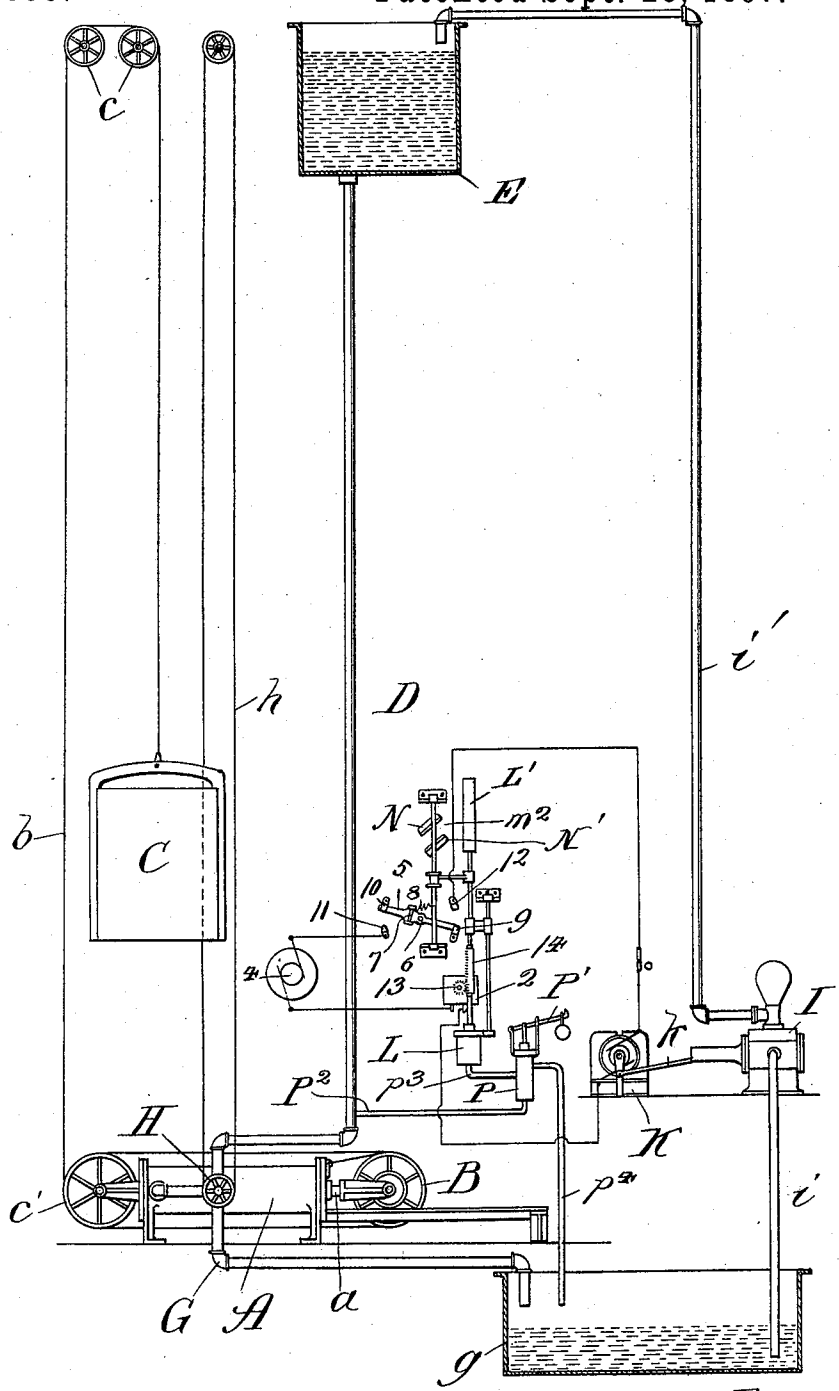

Witnesses:

Chas. E. Gaylord,

Lute J. Alter

Inventor:

Garrett Vanzant Barnes,

By Banning & Banning & Sheridan

Att'ys

THE NORRIS PETERS CO., PHOTO-LITHO., WASHINGTON, D. C.

(No Model.) 2 Sheets—Sheet 2.

G. V. BARNES.

ELEVATOR.

No. 590,655. Patented Sept. 28, 1897.

Fig. 2.

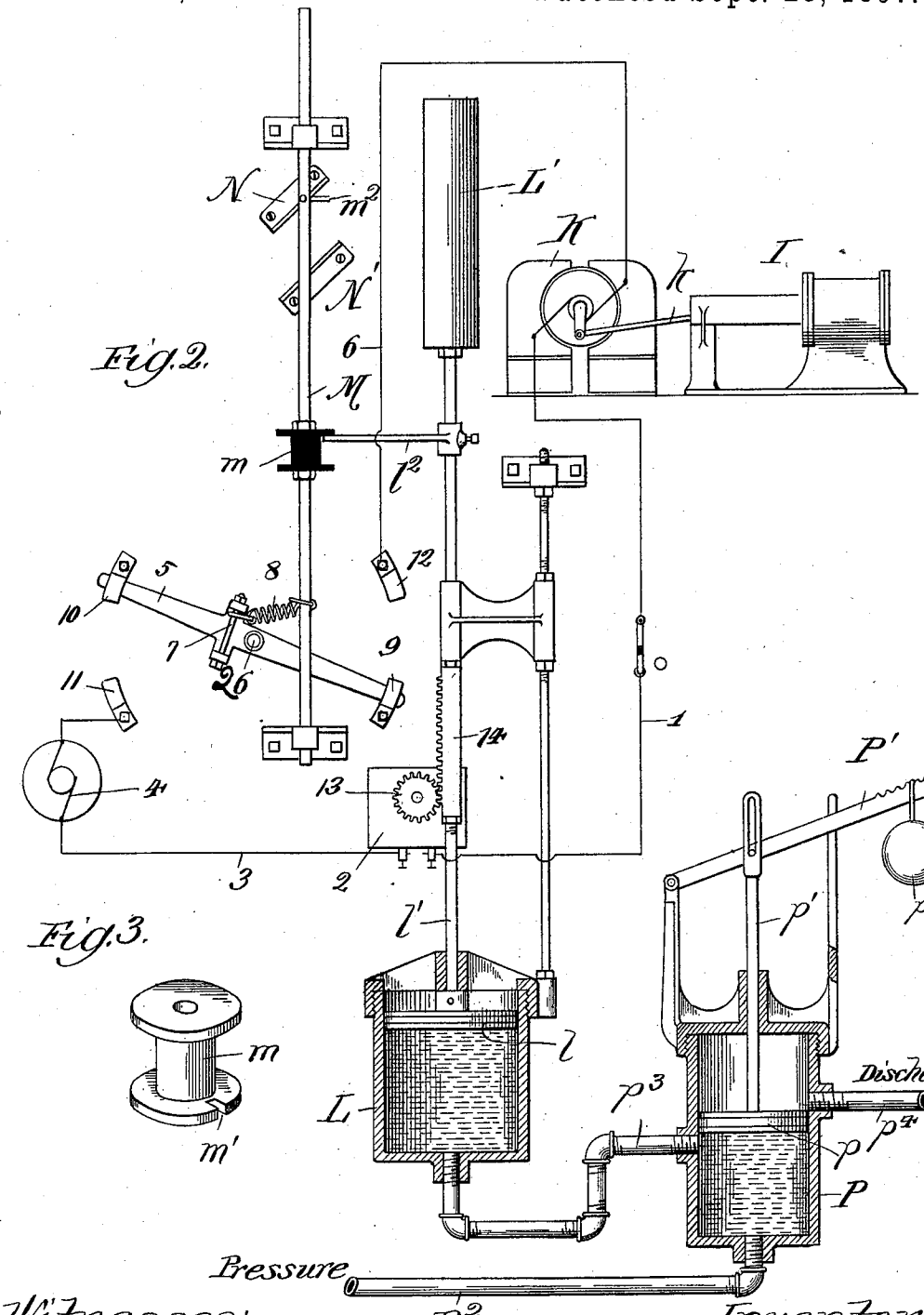

Fig. 3.

Witnesses:
Chas. E. Gaylord,
Luther J. Hite

Inventor:
Garrett Vanzant Barnes,
By Banning & Banning & Sheridan,
Attys.

THE NORRIS PETERS CO., PHOTO-LITHO., WASHINGTON, D. C.

UNITED STATES PATENT OFFICE.

GARRETT VANZANT BARNES, OF TOPEKA, KANSAS, ASSIGNOR OF TWO-FIFTHS TO DAVID A. MULVANE, OF SAME PLACE.

ELEVATOR.

SPECIFICATION forming part of Letters Patent No. 590,655, dated September 28, 1897.

Application filed December 22, 1896. Serial No. 616,570. (No model.)

To all whom it may concern:

Be it known that I, GARRETT VANZANT BARNES, a citizen of the United States, residing at Topeka, in the county of Shawnee and State of Kansas, have invented certain new and useful Improvements in Elevators, of which the following is a specification.

My invention relates especially to hydraulic elevators, and has particular relation to the mechanism by which a uniform supply of liquid-pressure is maintained.

The object of my invention is to provide simple, economical, and efficient mechanism for maintaining a uniform supply of liquid-pressure in an operating-cylinder of an elevating mechanism; and the invention consists in the features, combinations, and details of construction hereinafter described and claimed.

In the accompanying drawings, Figure 1 is a diagrammatic view of an elevator constructed in accordance with my improvements; Fig. 2, a diagrammatic view of a portion of the mechanism shown in Fig. 1, and Fig. 3 a detail perspective view of one of the parts hereinafter described.

In the art to which this invention relates it is well known that the tank for supplying liquid-pressure is furnished with a supply of water by means of a pipe or equivalent mechanism, such as pressure from a reservoir at a higher level. This pressure is generally furnished constantly, so that the mechanism for furnishing it is in constant use, thereby using up a large supply of electric current or a supply of fluid-pressure for operating the pump. In order to remove this objection and provide mechanism in connection with the pump-motor which will throw such motor into action only when necessary to keep the pressure up to a substantially uniform point is the principal object of my invention.

In constructing a pump and fitting it with my improvements I make a hydraulic operating-cylinder A of the desired size and shape and provide it with a movable piston having a rod *a* extending out of one end thereof. This piston-rod is provided with a rotatable pulley B, so that a wire, cable, or rope *b* may be passed from the car C around a set of pulleys *c* and *c'* and around the pulley B. In this way the movements of the pulley on the piston are multiplied, as it were, and act to move the car at an accelerated speed and thus give it greater length of movement.

The operating-cylinder is provided with a pressure-supply pipe D, which connects with a supply-tank E, located at some suitable point. Such cylinder is further provided with an exhaust-pipe G, which leads to a drip-tank *g*, so that the fluid escaping from the operating-cylinder may be recovered or retained to be again pumped to the supply-tank. At the point where the supply and exhaust pipes meet I arrange a three-way valve H of such construction and arrangement that when the supply is furnished the cylinder the exhaust is closed, and when the supply is cut off from such cylinder the exhaust may be opened. The three-way valve, or "operating-valve," as I prefer to term it, is provided with mechanism—preferably a cable *h*—which is passed around the pulley on the three-way valve and through the car, so that the operator in the car may move the valve to open or close the same, and thus control the movements of the car when desired.

To furnish the supply-tank with the required amount of water, I provide a pump I of the desired size and type and connect it by means of a feed-pipe *i* with the reservoir or drip-tank and by means of an educt-pipe *i'* with the supply-tank for the operating-cylinder. I further use an electric motor K and connect it with the piston-rod of the pump by means of a connecting-rod *k*, to operate such pump whenever desired.

In order to provide current for the motor and supply it at the desired times to operate such motor and pump and keep the pressure uniform in the supply-tank, I provide an electric circuit, which includes the wire 1, rheostat 2, wire 3, source of electric energy 4, cut-out switch 5, wire 6, and the electric motor which furnishes current to the motor and causes the operation. In order to operate the cut-out switch, so as to make or break the circuit when the pressure in the supply-tank falls below a certain predetermined point or rises above the same, I provide what might be termed a "hydraulic governing-cylinder" L, with a movable piston *l*, having a rod *l'* ex-

tending out at the upper end thereof. This rod is provided with a weight L′, located, preferably, at the upper portion, so as to move the piston downwardly when the liquid-pressure below the same is reduced. Arranged, preferably, parallel with the piston-rod is a second rod or what I prefer to term "switch-rod" M, provided with an insulated spool m, arranged to be contacted by a finger l^2 on the piston-rod, so that the finger may strike the inner surface of either flange and move the switch-rod in the desired direction. Immediately under or adjacent to the switch-rod is the lever 5 of the cut-out switch, pivotally mounted on a pin 26 and provided with a transverse rod 7, with which it is connected, by means of a spring 8, with the switch-rod. It will be seen that as the switch-rod is moved up the spring 8 is moved up on the transverse rod and acts to pull the switch-lever over against the stops 9 and 10. When the switch-rod is moved downward, the spring is also moved downward and acts to pull or swing the switch-lever over into contact with the terminals 11 and 12 of the circuit, thereby closing the circuit and furnishing current to the motor to operate the same, and thereby the pump.

When the parts are made of a working size, the piston-rod of the governing-cylinder will have a relatively larger movement than the switch-rod, so that it is necessary for the finger to pass out of contact with the spool after it has accomplished the result of opening or closing the switch. In order to accomplish this result, I provide one flange of the spool with a slot m' and the switch-rod with a projecting pin m^2, arranged to contact angular or cam surfaces N and N′. During the rising of the piston-rod the finger passes in through the slot m' and contacts the inner surface of the upper flange of the spool. Moving upwardly the pin strikes the inclined surface and turns the rod and spool, and in the return movement of the piston-rod the pin will strike the inner surface of the lower flange of the spool and move the switch downwardly until the pin contacts the lower cam-surface M′. By this time the cut-out-switch lever is moved to close the circuit, and the pin, contacting on the cam-surface, rotates the switch-rod and spool until the slot is brought coincident with the finger, allowing the same to pass out and contact the spool without further operating the parts.

In order to furnish pressure to the governing-cylinder, I provide a weighted piston-valve P, having a movable piston p arranged therein, with a valve-rod p' extending out of the upper end thereof. A lever P′ is arranged to operate on the upper portion of this valve-rod and is provided with a weight p^2, arranged to be adjustably located on the lever and provide different degrees of pressure. An educt-pipe p^3 leads from the valve-chamber to the governing-cylinder, and a discharge-pipe p^4 leads from the valve to the drip-tank g, while a supply-pipe P^2 leads to and connects with the pressure-supply pipe, preferably at a point adjacent to the operating-cylinder. The valve operates as follows: Supposing it takes a pressure of twenty-five pounds per square inch to economically and efficiently operate the elevator, the weight p^2 on the valve-lever is set at such a point as will act to depress the valve when the pressure sinks below such point. The moment the valve-piston passes below the opening of the educt-pipe pressure from the governing-cylinder passes through such pipe, through the valve, and out through the discharge-pipe. This permits the weight to move the governing-piston downwardly, thereby causing the switch-rod to move downwardly and operate the cut-out switch to close the circuit of the electric motor to operate the pump, thereby furnishing a fresh supply of liquid to the supply-tank. When the pressure in the supply-tank—or, more properly speaking, in the pressure-supply pipe—is sufficient to operate the elevator economically or rises above twenty-five pounds per square inch, it also acts on the piston of the valve to raise the same and close communication between the educt-pipe and discharge, open communication between the pressure-pipe and the governing-cylinder to raise the piston therein, and by the intermediate mechanism operates the cut-out-switch lever to open the electric circuit, thereby stopping the operation of the motor and pump.

In supplying current to the motor it is desirable that it be supplied gradually in order to prevent burning of the insulation in the armature. To accomplish this result, I provide a rheostat 2 of any ordinary type, and which is provided with a pinion 13, engaging with a rack 14 on the piston-rod. As the piston-rod moves upwardly to cause the opening of the electric circuit the rheostat is operated so as to gradually cut off the current. On the opposite or downward movement of the piston-rod the electric circuit is closed, as hereinbefore explained, and the rheostat so operated by the rotation of its pinion and shaft as to interpose its greatest resistance, so that current is gradually supplied to the motor to bring it to speed gradually, thereby lessening the danger of burning of the parts.

While I have described my invention with more or less minuteness as regards details and as being embodied in certain precise forms, I do not desire to be limited thereto unduly or any more than is pointed out in the claims. On the contrary, I contemplate all proper changes in form, construction, and arrangement, the omission of immaterial parts, and substitution of equivalents, as circumstances may suggest or necessity render expedient.

I claim—

1. In mechanism of the class described, the combination of an elevator or similar mechanism, a cylinder provided with a movable piston for operating the elevator, a tank for

holding the liquid, a pressure-supply pipe connecting the supply-tank with the operating-cylinder to furnish it a supply of liquid under pressure, an electrically-actuated pump for supplying liquid to the supply-tank, an electric circuit embracing the motor of the pump a source of electric energy and switch, a governing-cylinder connected by means of a pipe with the pressure-supply pipe of the operating-cylinder, a vertically-weighted movable piston in such governing-cylinder, a switch-rod arranged parallel therewith and adapted to be operated by means of the weighted governing piston-rod, and means connecting the switch-rod with the switch-lever to automatically open and close the electric circuit and thereby control the actions of the pump, substantially as described.

2. In mechanism of the class described, the combination of an elevator or similar mechanism, a cylinder provided with a movable piston for operating the elevator, a tank for holding the liquid, a pressure-supply pipe connecting the supply-tank with the operating-cylinder to furnish it a supply of liquid under pressure, an electrically-actuated pump for supplying liquid to the supply-tank, an electric circuit embracing the motor of the pump a source of electric energy and a switch, a governing-cylinder connected by means of a pipe with the pressure-supply pipe of the operating-cylinder, a vertically-weighted movable piston in such governing-cylinder, a switch-rod arranged parallel therewith and adapted to be operated by means of the weighted governing piston-rod, means connecting the switch-rod with the switch-lever to automatically open and close the electric circuit and thereby control the actions of the pump, and a weighted valve arranged on the pipe intermediate the pressure-supply pipe and the governing-cylinder and adapted to be operated by pressure in such cylinder and to open and close such pipe and admit pressure to or exhaust pressure from the governing-cylinder, substantially as described.

3. In mechanism of the class described, the combination of an elevator or similar mechanism, a cylinder provided with a movable piston for operating the elevator, a tank for holding a supply of liquid, a pressure-supply pipe connecting the supply-tank with the operating-cylinder to furnish such cylinder a supply of liquid under pressure, an electrically-actuated pump for furnishing a supply of liquid to the supply-tank, an electric circuit embracing the motor of the pump a source of electric energy a rheostat intermediate the same and a switch, a governing-cylinder connected with the pressure-supply pipe, a movable piston in such cylinder provided with a weighted piston-rod arranged in vertical position, a switch-rod arranged parallel therewith and connected with a lever of the electric switch, means arranged on the governing piston-rod to operate the switch-rod operate the switch-lever and open and close the electric circuit by the movements thereof, and means connecting the weighted governing piston-rod with the rheostat, whereby current is gradually turned on to the motor and turned off therefrom, substantially as described.

4. In mechanism of the class described, the combination of an elevator or similar mechanism, a cylinder provided with a movable piston for operating the elevator, a tank for holding a supply of liquid, a pipe connecting the supply-tank with the operating-cylinder to furnish such cylinder a supply of liquid under pressure, an electrically-actuated pump for furnishing a supply of liquid to the supply-tank, an electric circuit embracing the motor of the pump a source of electric energy a rheostat intermediate the same and a switch, a governing-cylinder connected with the pressure-supply pipe, a movable piston in such cylinder provided with a weighted piston-rod arranged in vertical position, a switch-rod arranged parallel therewith and connected with a lever of the electric switch, means arranged on the governing piston-rod to operate the switch-rod and thereby the lever and open and close the electric circuit, means connecting the weighted governing piston-rod with the rheostat, whereby current is gradually turned on to the motor and turned off therefrom, and a weighted piston-valve arranged on the pipe between the governing-cylinder and the pressure-supply pipe and adapted to be operated by the pressure in such pipe to open and close the communication with the governing-piston and to admit and exhaust pressure therefrom, substantially as described.

GARRETT VANZANT BARNES.

Witnesses:
WM. J. FRITZ,
GEO. A. URIE.