(12) INTERNATIONAL APPLICATION PUBLISHED UNDER THE PATENT COOPERATION TREATY (PCT)

(19) World Intellectual Property Organization
International Bureau

(43) International Publication Date
24 January 2013 (24.01.2013)

WIPO | PCT

(10) International Publication Number
WO 2013/011119 A1

(51) **International Patent Classification**:
D03D 47/16 (2006.01) *D03D 47/34* (2006.01)
D03D 47/23 (2006.01) *D03D 47/38* (2006.01)

(21) **International Application Number**:
PCT/EP2012/064275

(22) **International Filing Date**:
20 July 2012 (20.07.2012)

(25) **Filing Language**: English

(26) **Publication Language**: English

(30) **Priority Data**:
PD2011A000249 21 July 2011 (21.07.2011) IT

(71) **Applicant** *(for all designated States except US)*: **SMIT TEXTILE S.P.A.** [IT/IT]; Viale Dell'Industria, 135, I-36015 Schio (IT).

(72) **Inventor; and**

(75) **Inventor/Applicant** *(for US only)*: **DAL BIANCO, Nicola** [IT/IT]; Via Braglio, 54, I-36035 Marano Vicentino (IT).

(74) **Agents**: **PAVAN, Andrea** et al.; Corso di Porta Vittoria 9, I-20122 Milano (IT).

(81) **Designated States** *(unless otherwise indicated, for every kind of national protection available)*: AE, AG, AL, AM, AO, AT, AU, AZ, BA, BB, BG, BH, BR, BW, BY, BZ, CA, CH, CL, CN, CO, CR, CU, CZ, DE, DK, DM, DO, DZ, EC, EE, EG, ES, FI, GB, GD, GE, GH, GM, GT, HN, HR, HU, ID, IL, IN, IS, JP, KE, KG, KM, KN, KP, KR, KZ, LA, LC, LK, LR, LS, LT, LU, LY, MA, MD, ME, MG, MK, MN, MW, MX, MY, MZ, NA, NG, NI, NO, NZ, OM, PE, PG, PH, PL, PT, QA, RO, RS, RU, RW, SC, SD, SE, SG, SK, SL, SM, ST, SV, SY, TH, TJ, TM, TN, TR, TT, TZ, UA, UG, US, UZ, VC, VN, ZA, ZM, ZW.

(84) **Designated States** *(unless otherwise indicated, for every kind of regional protection available)*: ARIPO (BW, GH, GM, KE, LR, LS, MW, MZ, NA, RW, SD, SL, SZ, TZ, UG, ZM, ZW), Eurasian (AM, AZ, BY, KG, KZ, RU, TJ, TM), European (AL, AT, BE, BG, CH, CY, CZ, DE, DK, EE, ES, FI, FR, GB, GR, HR, HU, IE, IS, IT, LT, LU, LV, MC, MK, MT, NL, NO, PL, PT, RO, RS, SE, SI, SK, SM, TR), OAPI (BF, BJ, CF, CG, CI, CM, GA, GN, GQ, GW, ML, MR, NE, SN, TD, TG).

Declarations under Rule 4.17:

— *as to applicant's entitlement to apply for and be granted a patent (Rule 4.17(ii))*

— *of inventorship (Rule 4.17(iv))*

[Continued on next page]

(54) **Title**: SINGLE-GRIPPER WEAVING LOOM

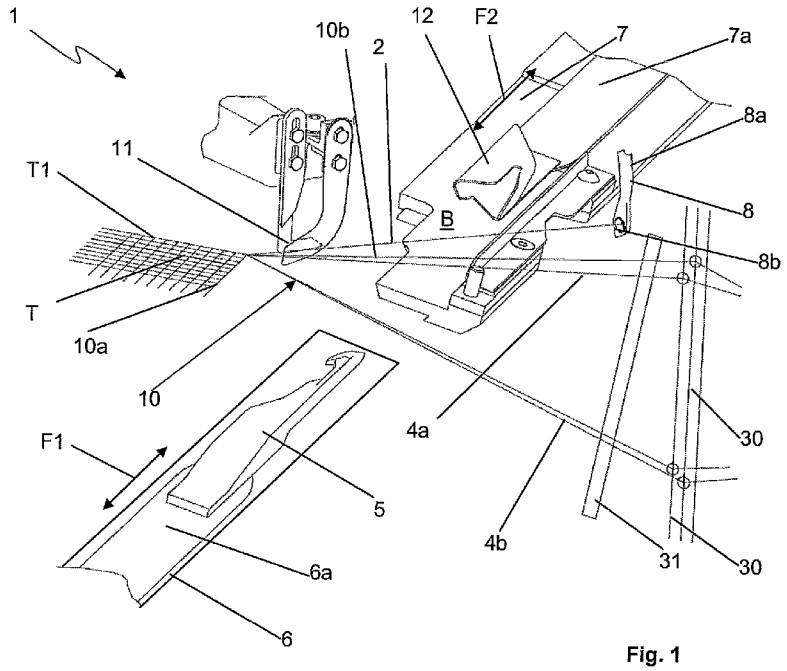

Fig. 1

(57) **Abstract**: A single-gripper loom (1) comprising: a receiving gripper (5) that is movable along a first sliding guide (6) through a weaving shed (10) from and to a gripping position (P2) outside the weaving shed (10) or close to a first opening thereof (10b) wherein said receiving gripper (5) receives one or more weft threads (2, 3), a weft selector (8), a weft feeder (12) to transfer the weft threads (2, 3) from the selector (8) to the receiving gripper (5), movable along a second sliding guide (7), between an intercepting position (P1) of the weft threads (2, 3), outside the weaving shed, and the gripping position (P2) wherein the receiving gripper (5) receives the weft threads (2, 3) from the weft feeder (12).

WO 2013/011119 A1

Published:

— *with international search report (Art. 21(3))*

SINGLE-GRIPPER WEAVING LOOM

****

Field of the invention

The present invention relates to a single-gripper weaving loom and to a weaving method for a single-gripper loom.

Background of the invention

In the technical context of weaving looms it is known the use of double-gripper looms. According to a typical embodiment, such looms comprise a first carrying gripper, which receives one or more weft threads from a weft selector and transports them into a weaving shed consisting of a passage delimited by two pluralities of warp threads arranged according to respective planes extending from a common edge consisting of the last weft thread inserted into the fabric with the aid of the last beat-up of the loom reed. During weaving, before being transferred onto the carrying gripper, each weft thread extends from a respective rock to the strip of already produced fabric. Once a weft thread has been grasped by the carrying gripper, the portion of said weft threat that extends from the fabric that has already been produced to the carrying gripper is cut before insertion of the weft thread in the weaving shed. Thus, at each insertion of the carrying gripper into the weaving shed, it only carries weft thread, which unwinds from the respective rock, without interesting the portion of thread from the part of the fabric that has already been produced. The use of a cutting device, placed between the position in which the carrying gripper receives the thread and the weaving shed, is envisaged in order to carry out the cutting of the weft thread. While the carrying gripper advances within the weaving shed a second receiving gripper moves in the opposite direction. The grippers meet half way into the weaving shed and interpenetrate each other. The weft thread or threads are released by the carrying gripper and gripped by the receiving gripper with the aid of suitable lever controls that are actively moved, by means of external control, or passively moved, by the said weft threads. Following the exchange, the movement of each gripper is inverted and the carrying gripper returns to the initial position while the receiving gripper carries the weft threads along the second half of the weaving shed.

The above-described double-gripper loom permits high weaving speeds to be achieved, while at the same time permitting fabrics of a considerable width to be produced. It however presents a plurality of drawbacks, the main ones being:

- the exchange difficulty between grippers for certain types of weft, such as thick, fine, multi-filament, slub or other wefts,
- the number of structural defects that this exchange difficulty produces in the fabric, which for certain types of fabric, for example technical fabrics or filtering fabrics for medical application, can be unacceptable,
- the low production flexibility since considerable time is required to adjust the loom in order to pass onto a different item produced, in the event of frequent item changes, calibration times can become excessively high.

In addition to double-gripper looms there are also known single-grip looms that envisage the use of a single gripper, which carries the weft threads through the whole weaving shed. With these looms is possible to overcome the drawbacks connected to the transfer of the weft threads from one gripper to the other, while accepting lower weaving speeds and product width. For example, it is known the production of looms comprising a single receiving gripper that directly receives the weft threads from a fixed weft presentation device. After having gripped the weft thread the receiving gripper carries it through the weaving shed from a first end close to the presentation device to a second, remote end, upon reaching which the gripper releases the weft thread and returns towards the first end of the shed to receive more weft thread.

The above-described single-gripper loom does not represent an optimal solution being improvable upon under multiple aspects, in particular as concerns flexibility and item change times.

Summary

The aim of the present invention is that of providing a new single-gripper loom, capable of overcome the drawbacks reported with reference to the prior art, while permitting a high production flexibility, being characterised by a wide range of produceable fabrics and by shorter item change times.

Another aim is that of making available a loom of the above-indicated type, capable of producing fabrics characterised by a low level of structural defects and therefore particularly usable in the production of technical fabrics.

According to the invention, the aforementioned technical problem is resolved with the aid of a single-gripper loom having the characteristics as stated in the main claim.

In particular the invention relates to a single-gripper loom comprising:

- a receiving gripper, which is movable along a first sliding guide through a weaving shed from and to a gripping position, wherein said receiving gripper receives one or more weft threads so as to insert said weft threads into said weaving shed from a first opening to a second opening of said weaving shed, said gripping position being outside said weaving shed or close to said first opening,
- a weft selector, which acts on said weft threads to move each of said weft threads between a raised position spaced from said first guide and a lowered position close to said first guide,

characterised in that it further comprises:

- a weft feeder to transfer said weft threads from said weft selector to said receiving gripper, said weft feeder being movable along a second sliding guide, between an intercepting position outside said weaving shed, wherein said weft feeder intercepts said weft threads in said lowered position, and said gripping position, wherein said receiving gripper receives said weft threads from said weft feeder.

With the present invention it is therefore possible to obtain a single-gripper loom wherein a single receiving gripper received the weft threads from a weft feeder, which acts between the weft selector and the receiving gripper, therefore having a function analogous to that of the carrying gripper of a double-gripper loom, but permitting a plurality of advantages to be achieved. Among these, the fact that in the present invention the weft feeder places each of the weft threads lowered by the selector into an optimal position for fastening by the receiving gripper, before the weft thread is cut. This permits the weft feeder to be made constructively simpler than a carrying gripper, no gripping element for retaining the weft threads on the weft feeder being in fact necessary. This makes the release of the weft

threads from the weft feeder simpler and allows a more reliable grip on the part of the receiving gripper. In addition, by cutting the thread after it has been fastened by the receiving gripper into the optimal position achieved by means of the weft feeder, weft thread waste is minimised.

The greater simplicity of this loom compared to a conventional double-gripper loom also makes the change of processed item phases simpler and quicker, while improving production flexibility.

A further advantage consists in that the exchange of the thread between the weft feeder and receiving gripper presents less critical issues since it takes place outwith the weaving shed and before the weft thread is cut. This significantly reduces the structural defects of the fabrics obtained with the loom of the present invention.

Other advantages of the present invention are achieved by means of a single-gripper loom according to the dependant claims. In particular, the present invention allows the obtaining of a loom wherein the angle of the weft thread with respect to a sliding plane of the receiving gripper can be changed by means of rotation of the weft feeder. This further contributes to increasing the production flexibility of the loom of the present invention.

Brief description of the drawings

Further characteristics and advantages of the present invention will become clearer from the following detailed description of a preferred, but non-exclusive embodiment, illustrated by way of a non-limiting example, with reference to the accompanying drawings, wherein:

- figure 1 is an axonometric view of a significant portion of a single-gripper loom according to the present invention,
- figure 2 is an axonometric view of a detail of the loom of figure 1;
- figure 3 is an axonometric view of the detail of figure 2 in a different operational configuration,
- figure 4 is an axonometric view of another detail of the loom of figure 1 in a different operational configuration than that of figure 1,
- figures 5 and 6 are two axonometric views of the detail of figure 4, in two different respective operational configurations,

- figure 7 is a schematic bottom view of the detail of figure 2,
- figure 8 is a front view of the detail of figure 2,
- figure 9 is a top view of the detail of figure 2.

Detailed description of the invention

With reference to the accompanying drawings, a single-gripper loom according to the present invention is overall indicated by 1.

Figure 1 shows a strip of fabric T during weaving, which is fixed to the loom 1. The strip of fabric T comprises two pluralities of respective weft 2, 3 and warp 4a, 4b threads, orthogonally woven together.

The loom 1 comprises a receiving gripper 5 that moves by means of sliding through a weaving shed 10 consisting of a first portion 4a and of a second portion 4b of warp threads, respectively arranged along respective planes extending from one common edge 10a of weft consisting of the last weft thread inserted by the receiving gripper 5 into the strip of fabric T, as better described hereunder. The weaving shed 10 is extended between a first opening 10b, aligned with a first edge T1 of the fabric T and a second opening (not represented) aligned with a second edge (not show), parallel to the first edge T1.

The angle between the planes of the warp threads 4a and 4b that constitute the weaving shed is adjustable by means of a plurality of heddles, schematically represented by the lines 30 of figure 1, structurally and functionally in themselves known to the prior art. Between the heddles 30 and the weft edge 10a, a reed 31 is provided, which is also schematically represented in figure 1, to push each weft thread inserted into the weaving shed 10 towards the stripe of fabric T. The shape and the operation of the reed 31 are in themselves known.

The receiving gripper 5 is movable across the weaving shed 10 along a sliding guide 6 produced with the aid of a semi-rigid driving tape 6a, that is partially wound around a driving gear (not represented) so as to slide in the space between the reed 31 and the fabric T in a sliding direction F1 parallel to the weft edge 10a. The tape 6a, in a preferred embodiment thereof, is flat in shape with two flat, opposing main faces that are arranged parallel to a sliding plane B of the tape 6a, on one of which the receiving gripper 5 is mounted.

According to another variant embodiment of the invention (not represented), the sliding guide 6 is obtained by means of a rigid driving rod.

In general, according to other variant embodiments of the invention, the sliding guide 6 is obtained by means of a driving element other than a tape or a rod, so long as it is able to produce the sliding movement required by the receiving gripper.

Rotation of the driving gear and the consequent translation of the driving tape 6a determines the sliding of the receiving gripper 5 from and to a gripping position P2 (figure 4), wherein the receiving gripper 5 receives one or more weft threads 2, 3 so as to insert them in the weaving shed 10 from the first opening 10b to the second opening of the weaving shed 10. The gripping position P2 is outside the weaving shed 10, on the side of the first opening 10b.

According to another variant embodiment of the invention, the gripping position P2 is inside the weaving shed 10, in proximity to the first opening 10b.

The receiving gripper 5 is of a known and conventional type and comprises one hook end 5a which receives and holds the weft threads 2, 3. The receiving gripper 5 is operated with the aid of the tape 6a to pass through the entire weaving shed 10 up to an end stroke position (not represented), positioned beyond the second opening of the weaving shed 10. In proximity of the end stroke position, the receiving gripper 5 releases the weft threads 2, 3 to return to the gripping position P2, so as to be able to receive other weft threads to insert in the weaving shed 10.

The weft threads 2, 3 that must be taken by the receiving gripper 5, are selected on the basis of the characteristics of the fabric T, by a weft selector 8 that is active on a plurality of weft threads, each of which extends from one respective rock (not represented) towards the fabric T being woven. The weft selector 8 is positioned outside the weaving shed 10, on the side of the first opening 10b, and comprises a plurality of rods 8a, each of which is provided, at one end, with an eyelet 8b through which a respective weft thread passed. Each rod is movable between a raised resting position, represented in figure 1, spaced from the sliding plane B, and a lowered position, represented in figure 2, close to the sliding plane B.

The weft selector 8 is of a known type, for example according to that which is described in patents EP0894882 and EP0894883, and for this reason not described in further detail.

In the example of figures 2 et seq there is represented the case in which the weft selector 8 selects two wefts to be inserted into the weaving shed 10. In general, according to other variant embodiments that are not represented, any number of wefts can be selected between 1 and the maximum number of wefts on which the weft selector 8 is active.

The loom 1 further comprises a weft feeder 12 to transfer the weft threads 2, 3 from the rods of the weft selector 8 in the lowered position to the receiving gripper 5, in the gripping position P2. The weft feeder 12 is movable along a second sliding guide 7, produced with the aid of a semi-rigid driving tape 7a, partially wound around a respective driving gear (not represented) so as to be able to slide in a sliding direction F2 aligned with the sliding direction F1 of the tape 6a.

According to another variant embodiment of the invention (not shown), the sliding guide 7 is obtained by means of a rigid driving rod.

In general, according to other variant embodiments of the invention, the sliding guide 7 is produced by means of a driving element other than a tape or a rod, so long as it is able to produce the sliding movement required by the receiving gripper 12.

The tape 7a is also flat in shape with two flat, opposing main faces that are arranged parallel to the sliding plane B, on one of which is mounted the weft feeder 12. The movement of the tape 7a is synchronised with that of the tape 6a of the receiving gripper 5, so that the weft feeder 12 can slide along the second guide 7, between an intercepting position P1, outside the weaving shed 10 on the side of the first opening 10b, wherein the weft feeder 12 intercepts the weft threads 2, 3 in the lowered position, and the gripping position P2, wherein the receiving gripper 5 receives the weft threads 2, 3 from the weft feeder 12.

The movement of the weft feeder 12 is such that the gripping position P2 is interposed between the intercepting position P1 and the first opening 10b of the weaving shed 10. After having ceded the weft threads 2, 3 to the receiving gripper 5 in the gripping position P2, the weft feeder 12 is activated with the aid of the tape

7a to move along an outside starting position (not represented), placed beyond the intercepting position P1. The weft feeder can be activated from the starting position with the aid of the tape 7a to return to the intercepting position P1, so as to be able to intercept other weft threads to transfer to the receiving gripper 5.

The weft feeder 12 is provided with a cavity 13 that is elongated and adjustable according to the sliding direction F1 of the receiving gripper 5. The cavity 13 is susceptible to housing the hook end 5a of the receiving gripper 5 when it reaches the gripping position P2. The cavity 13 of the weft feeder 12 is defined between a first flat lower face 14, adjacent to the tape 7a of the second guide 7, a second flat upper face 15 that is opposed to the first face 14. The weft feeder 12 has an almost hollow parallelepiped shape and further comprises two opposing flat lateral faces 21, 22 extending between the first and second lower and upper face 14, 15. Correspondingly, the cavity 13 also has a parallelepiped shape.

The cavity 13 comprises a front opening 13a facing the receiving gripper 5 and susceptible to intercepting the weft threads 2, 3 when the weft feeder 12 reaches the intercepting position P1.

The first and second face 14, 15 respectively comprise a first notch 18 and a second notch 19, extending from the front opening 13a and susceptible to receiving the weft threads 2, 3 when the weft feeder is between the intercepting P1 and gripping P2 positions. The weft threads 2, 3 are positioned in the respective end grooves of the notches 18, 19 so that they cross the cavity 13 from one to the other first and second face 14, 15. The weft feeder 12 and, in particular, the notches 18, 19 are not provided with any gripping element for holding the weft threads 2, 3. The gripping position P2 is conveniently close to the intercepting position P1 and to the first opening 10b of the weaving shed 10, so that the weft threads 2, 3 are transferred by the weft selector 8 to the receiving gripper 5 with the aid of the weft feeder 12, without there being any need of gripper elements to hold the weft threads 2, 3 in the weft feeder 12.

According to another variant embodiment of the invention (not represented), at least one of the notches 18, 19 is produced on one of the lateral faces 21, 22 of the weft feeder 12.

According to a further variant embodiment of the invention (not represented), the weft feeder 12 comprises a single notch produced on the lower face 14 or on the upper face 15 or on one of the lateral faces 21, 22.

The weft threads 2, 3 cross the cavity 13, from one to the other first and second face 14, 15, forming a pre-defined angle A with the sliding plane B. The angle A is in general of between 0° and 180° and is selected on the basis of the type and of the processing parameters executed by the loom 1.

In order to change the angle A it is possible to substitute the weft feeder 12 with another weft feeder of a different size or position of the notches 18, 19 or to change the inclination of the weft feeder by rotating around a rotation axis Y that is parallel to the sliding direction F1.

Alternatively, according to a variant embodiment of the invention, the weft feeder 12 is optionally provided with a rotating actuator M so as to be rotatable in operation, also while the weft feeder 12 is sliding along the direction F2, around the rotation axis Y, to change the angle A while in operation.

In the end part of its stroke towards the gripping position P2, the receiving gripper 5 interpenetrates the weft feeder 12, entering the cavity 13 through the front opening 13a and moving aside the weft threads 2, 3 with the external part of the hook end 5a. In the first part of its return stroke, the weft threads 2, 3 held in the cavity 13 between the first and the second notch 18, 19, are gripped by the internal part of the hook end 5a and carried towards the weaving shed 10 (figure 5).

The loom 1 comprises a weft cutter 11 that can be operated to cut the weft threads 2, 3 after the receiving gripper 5 has received these, as schematically represented in figure 6 wherein the weft cutter 11 is indicated by a pair of scissors.

The weft cutter 11 can be operated to cut the weft threads 2, 3 when the receiving gripper has reached an intermediate cutting position P3 between the gripping position P2 and the first opening 10b of the weaving shed 10, so that only weft thread that is unwound from the respective rock is inserted into the weaving shed, without affecting the section of thread from the part of the fabric T.

Alternatively, according to another variant embodiment of the invention, the cutting position P3 is inside the weaving shed 10, in proximity to the first opening 10b.

In possible variant embodiments of the present invention, the cutting position P3 is arranged so that the weft threads 2, 3 are cut after they have been gripped by the receiving gripper 5. The receiving gripper 5 thus reaches the cutting position P3 following the gripping position P2.

In all possible variant embodiments of the present invention, the cutting position P3 is conveniently close to the gripping position P2, so as to minimise weft thread waste.

The weft cutter 11, as represented in figure 1, is in itself known and conventional and is therefore not described in detail.

The loom 1 can be operated according to a weaving method comprising the below-described weaving methods.

In a first step, one or more weft threads 2, 3 are selected with the aid of a weft selector 8. The weft threads are gripped in a lowered position (figure 2) in which they can be intercepted by the weft feeder 12. In this step the weft feeder 12 is located between the starting position and the weft intercepting position P1 while the receiving gripper 5 is located between the end stroke position and the gripping position P2.

In a second step, the weft threads 2, 3 in a lowered position are intercepted with the aid of a weft feeder 12 (figure 3), so as to arrange themselves between the first and the second notch 18, 19, through the cavity 13. Interception of the weft threads 2, 3 takes place the weft feeder 12 is in the intercepting position P1, reached by means of the sliding of the starting position towards the weaving shed 10.

In a third step, the weft feeder 12 is translated from the intercepting position P1 to the gripping position P2, outside the weaving shed 10, wherein it meets the receiving gripper 5, which interpenetrates the weft feeder 12, entering into the cavity 13 (figure 4). In this step, the motion of the weft feeder 12 allows the weft threads 2, 3 gripped within it to be effectively stretched, so as to facilitate the gripping on the part of the receiving gripper 5.

In a fourth step, in the gripping position P2, the weft threads 2, 3 are transferred by the weft feeder 12 to the receiving gripper 5, which holds them at the level of the

hook end 5a and transports them towards the weaving shed 10, while translating (figure 5) from the gripping position P2 towards the end stroke position.

In a fifth step, the weft threads 2, 3 are cut with the aid of the weft cutter 11 after they have been transferred to the receiving gripper 5, before insertion into the weaving shed 10.

In a sixth step, the weft threads 2, 3 are inserted into the weaving shed 10, with the aid of a receiving gripper 5, until the end stroke position has been reached, in proximity to which the weft threads 2, 3 are released. In the course of the fifth and sixth step, the weft feeder 12 returns to the starting position.

According to other variant embodiments of the present method, the gripping position P2 and/or the cutting position P3 are inside the weaving shed 10 in proximity to the first opening 10b, as described in detail above.

The above-described method can also be operated on looms other than the above-described loom 1 so long as they are equipped with a single receiving gripper for the insertion of the weft inside the weaving shed and of a weft feeder for the transfer of the weft from a weft selection device to the receiving gripper.

The described technical solutions allow the set aims and objects to be fully achieved with reference to the cited prior art, among which there is highlighted the fact of allowing a high production flexibility through the wide range of weft threads that can be processed, in particular thick, fine, multi-filament, slub or other wefts for which the holding and exchange difficulties between the grippers normally used in double-gripper looms are known.

Claims

1. A single-gripper loom (1) comprising:

- a receiving gripper (5), which is movable along a first sliding guide (6) through a weaving shed (10) from and to a gripping position (P2) wherein said receiving gripper (5) receives one or more weft threads (2, 3) so as to insert said weft threads into said weaving shed (10) from a first opening (10b) to a second opening of said weaving shed (10), said gripping position (P2) being outside said weaving shed (10) or close to said first opening (10b),

- a weft selector (8), which acts on said weft threads to move each of said weft threads (2, 3) between a raised position spaced from said first guide (6) and a lowered position close to said first guide (6),

characterized in that it further comprises:

- a weft feeder (12) to transfer said weft threads (2, 3) from said weft selector (8) to said receiving gripper (5), said weft feeder (12) being movable along a second sliding guide (7), between an intercepting position (P1) outside said weaving shed (10), wherein said weft feeder (12) intercepts said weft threads (2, 3) in said lowered position, and said gripping position (P2) wherein said receiving gripper (5) receives said weft threads (2, 3) from said weft feeder (12).

2. A single-gripper loom (1) according to claim 1, wherein a cutting element (11) is provided, which can be operated to cut said weft threads (2, 3) once said receiving gripper (5) has received said weft threads (2, 3).

3. A single-gripper loom (1) according to one of the preceding claims, wherein said first and second guides (6, 7) are aligned with each other and said weft feeder (12) is provided with a cavity (13), which is susceptible to housing at least one portion of said receiving gripper (5) in at least said gripping position (P2), said weft threads (2, 3) being susceptible to crossing said cavity (13) when said weft feeder (12) is between said intercepting (P1) and gripping (P2) positions.

4. A single-gripper loom (1) according to claim 3, wherein said cavity (13) of said weft feeder (12) is defined between at least a first lower face (14), adjacent to said second sliding guide (7), and at least a second upper face (15) opposed to said first face (14), said weft feeder (12) comprising at least a first notch (18, 19)

susceptible to receiving said weft threads (2, 3) between said intercepting (P1) and gripping (P2) positions.

5. A single-gripper loom (1) according to claim 4, wherein said first and second notches (18, 19) are dimensioned so that said weft threads (2, 3) cross said cavity (13), between said intercepting (P1) and gripping (P2) positions, thus forming a 0° - 180° angle (A) with a sliding plane (B) parallel to said first and second guides (6, 7).

6. A single-gripper loom (1) according to claim 5, wherein said weft feeder is rotatable around a rotation axis (Y) parallel to said second sliding guide (7), in order to vary said angle (A) in use.

7. A weft feeder (12) for a single-gripper loom (1), which can be coupled with a sliding guide (7) of said loom (1), said weft feeder (12) comprising:

- a cavity (13) for housing a receiving gripper (5) of said loom (1) within said weft feeder (12),
- a first and a second notch (18, 19), susceptible to receiving one or more weft threads (2, 3) so that said weft threads (2, 3) cross said cavity (13) to be gripped by said receiving gripper (5) when said receiving gripper (5) is housed within said weft feeder (12),

characterised in that said weft feeder (12) is devoid of any gripping element for holding said weft threads (2, 3).

8. A weft feeder (12) according to claim 7, wherein said weft feeder (12) further comprises:

- a first sliding face (14) that is susceptible to being placed in a position adjacent to said sliding guide (7) and a second face (15) that is opposed with respect to said first face (14), said cavity (13) being defined between said first and second face (14, 15),
- said first and second notches (18, 19), being respectively provided on said first and second face (14, 15).

9. A weft feeder (12) according to claim 8, wherein said weft feeder (12) has an almost hollow parallelepiped shape and comprises two opposing, flat lateral faces (21, 22) extending between said first and second face (14, 15).

10. A weaving method for a single-gripper loom comprising the steps of:

- selecting one or more weft threads (2, 3) by means of a weft selector (8),
- intercepting said weft threads (2, 3) by means of a weft feeder (12),
- translating said weft feeder (12) to a gripping position (P2) of said weft threads (2,3),
- in said gripping position (P2), transferring said weft threads (2,3) from said weft feeder (12) to a receiving gripper (5) of said loom (1),
- inserting said weft threads (2,3) into a weaving shed (10) by means of said receiving gripper (5).

11. A weaving method according to claim 10, further comprising the step of cutting said weft threads (2, 3) once they have been transferred to said receiving gripper (5).

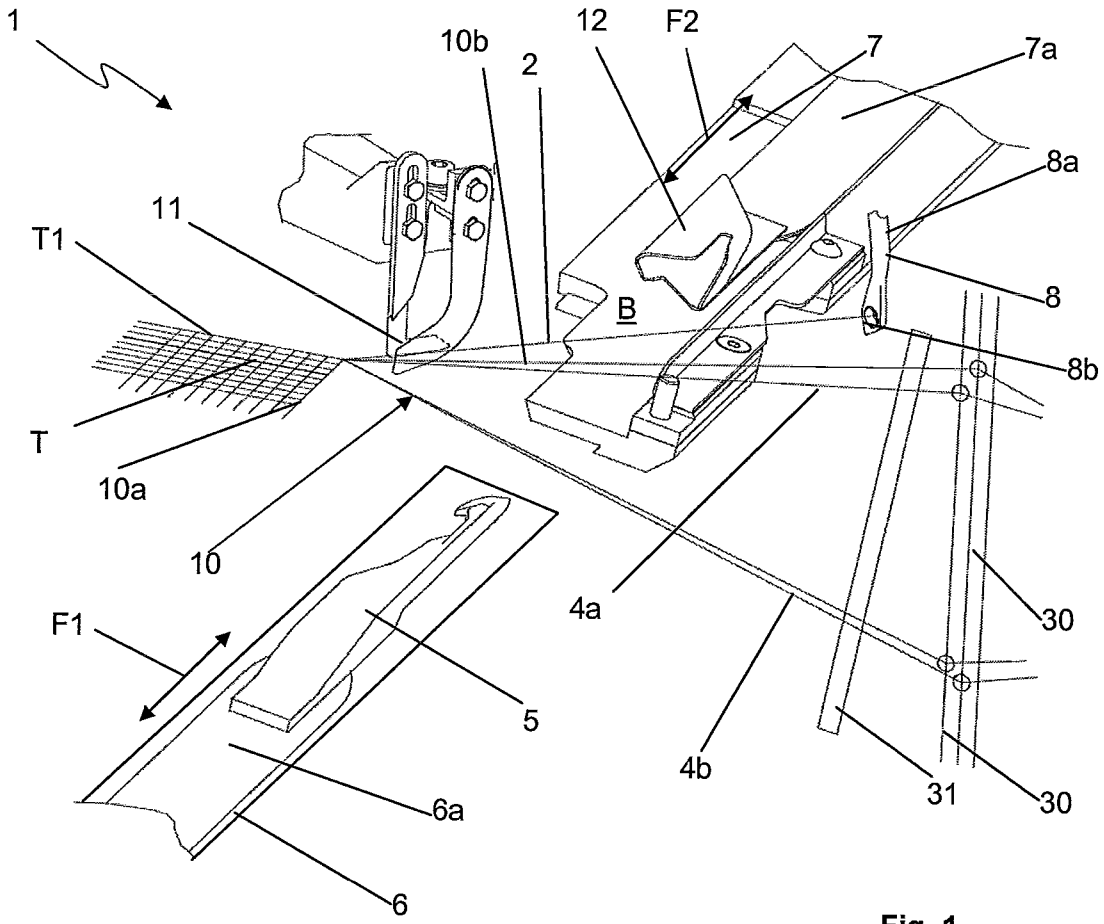

Fig. 1

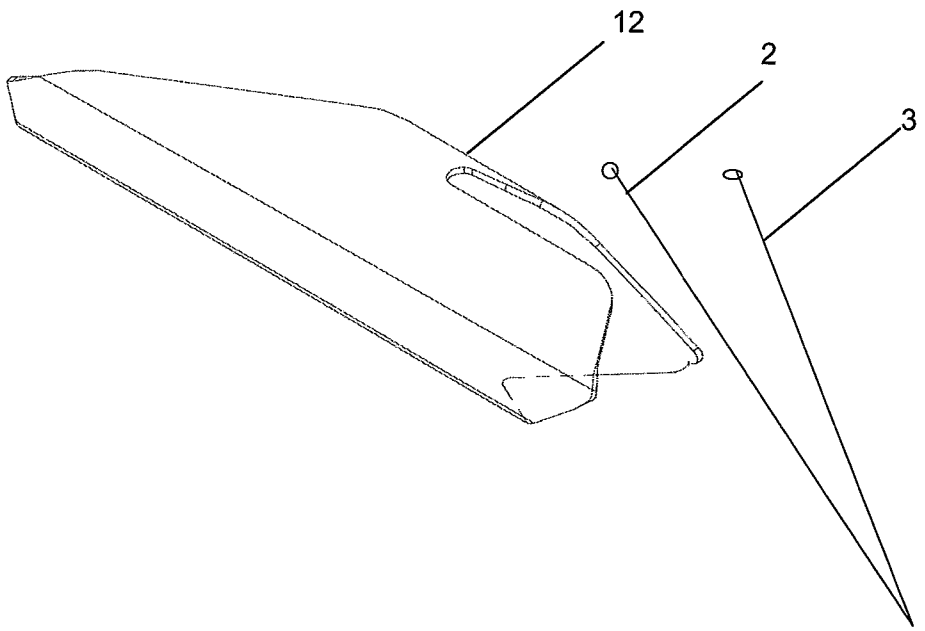

Fig. 2

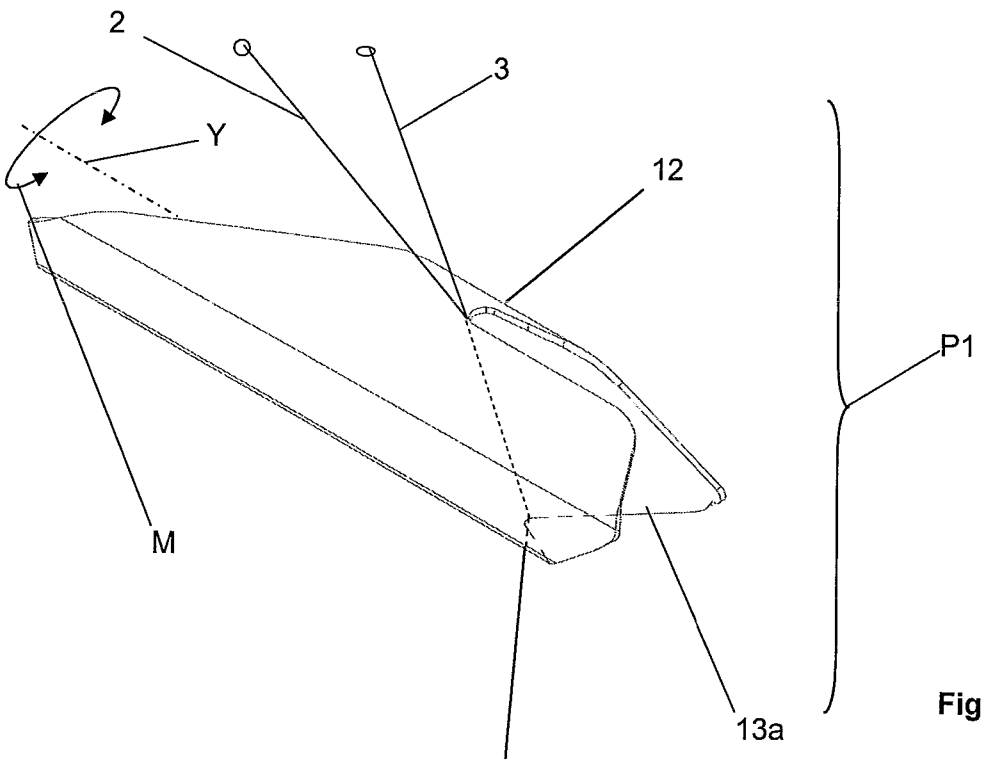

Fig. 3

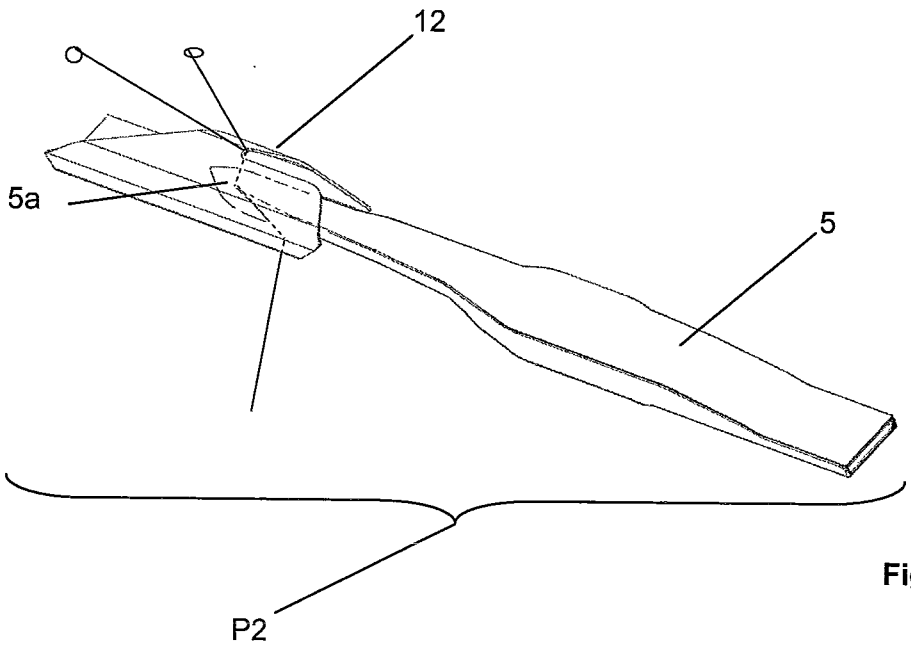

Fig. 4

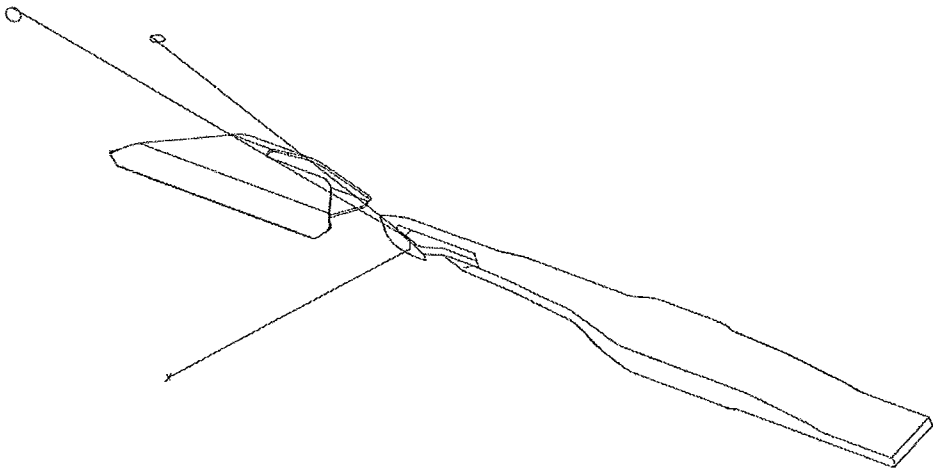

Fig. 5

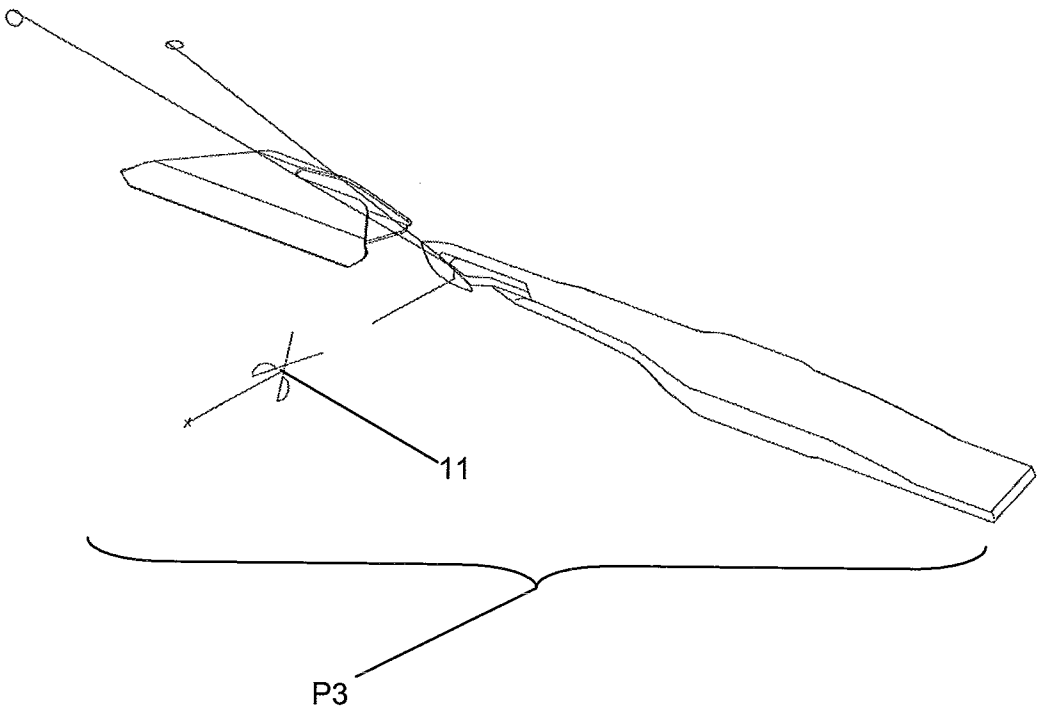

Fig. 6

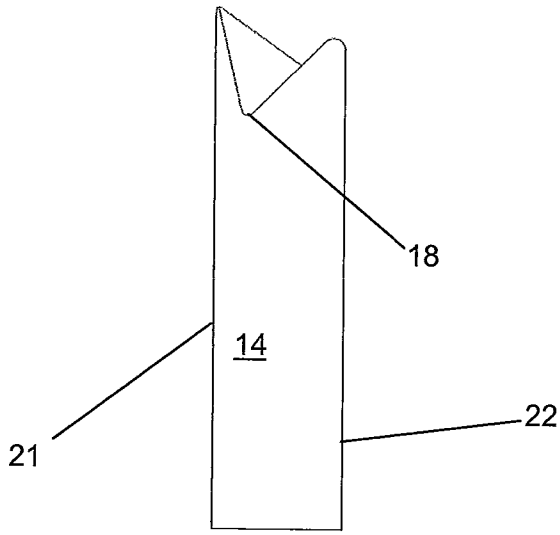

Fig. 7

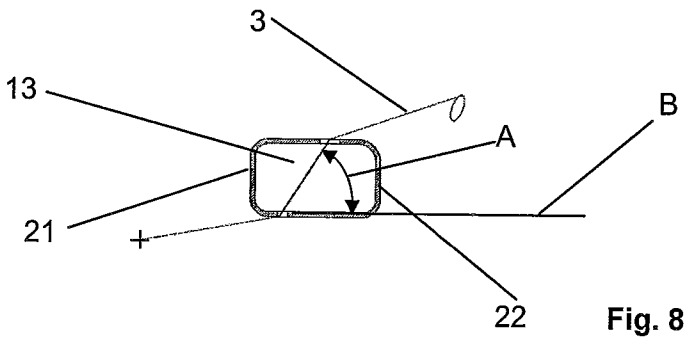

Fig. 8

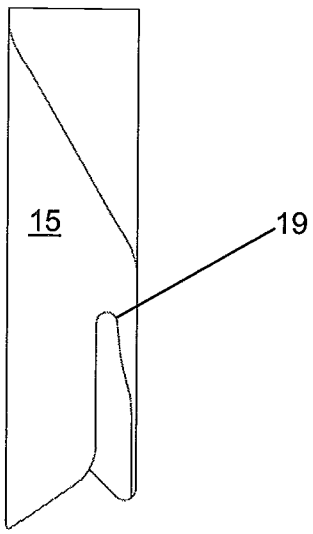

Fig. 9

INTERNATIONAL SEARCH REPORT

International application No
PCT/EP2012/064275

A. CLASSIFICATION OF SUBJECT MATTER
INV. D03D47/16 D03D47/23 D03D47/34 D03D47/38
ADD.

According to International Patent Classification (IPC) or to both national classification and IPC

B. FIELDS SEARCHED

Minimum documentation searched (classification system followed by classification symbols)
D03D

Documentation searched other than minimum documentation to the extent that such documents are included in the fields searched

Electronic data base consulted during the international search (name of data base and, where practicable, search terms used)
EPO-Internal, WPI Data

C. DOCUMENTS CONSIDERED TO BE RELEVANT

Category*	Citation of document, with indication, where appropriate, of the relevant passages	Relevant to claim No.
A	DE 10 2009 036589 A1 (DORNIER GMBH LINDAUER [DE]) 10 February 2011 (2011-02-10) the whole document	1-11
A	WO 2010/142264 A1 (DORNIER GMBH LINDAUER [DE]; ACHBERGER JOHANN [DE]; SIBBESSON ANDERS [S) 16 December 2010 (2010-12-16) page 7, line 35 - page 8, line 6; figures 1-6	1-11
A	WO 2009/135636 A1 (PICANOL NV [BE]; VERCLYTE EDDY [BE]; GHESQUIERE KURT [BE]; DEWITTE RON) 12 November 2009 (2009-11-12) page 23, lines 9-16; figures 1-13	1-9

-/--

[X] Further documents are listed in the continuation of Box C.

[X] See patent family annex.

* Special categories of cited documents :

"A" document defining the general state of the art which is not considered to be of particular relevance

"E" earlier application or patent but published on or after the international filing date

"L" document which may throw doubts on priority claim(s) or which is cited to establish the publication date of another citation or other special reason (as specified)

"O" document referring to an oral disclosure, use, exhibition or other means

"P" document published prior to the international filing date but later than the priority date claimed

"T" later document published after the international filing date or priority date and not in conflict with the application but cited to understand the principle or theory underlying the invention

"X" document of particular relevance; the claimed invention cannot be considered novel or cannot be considered to involve an inventive step when the document is taken alone

"Y" document of particular relevance; the claimed invention cannot be considered to involve an inventive step when the document is combined with one or more other such documents, such combination being obvious to a person skilled in the art

"&" document member of the same patent family

Date of the actual completion of the international search	Date of mailing of the international search report
21 September 2012	05/10/2012

Name and mailing address of the ISA/	Authorized officer
European Patent Office, P.B. 5818 Patentlaan 2 NL - 2280 HV Rijswijk Tel. (+31-70) 340-2040, Fax: (+31-70) 340-3016	Iamandi, Daniela

2

Form PCT/ISA/210 (second sheet) (April 2005)

INTERNATIONAL SEARCH REPORT

International application No
PCT/EP2012/064275

C(Continuation). DOCUMENTS CONSIDERED TO BE RELEVANT

Category*	Citation of document, with indication, where appropriate, of the relevant passages	Relevant to claim No.
A	WO 2008/104355 A1 (PICANOL NV [BE]; MOENECLAEY DENIS [BE]; CARPENTER JOOST [BE]) 4 September 2008 (2008-09-04) figures 1-10	1-9

2

INTERNATIONAL SEARCH REPORT

Information on patent family members

International application No
PCT/EP2012/064275

Patent document cited in search report	Publication date	Patent family member(s)	Publication date
DE 102009036589 A1	10-02-2011	CN 102471956 A	23-05-2012
		DE 102009036589 A1	10-02-2011
		EP 2462267 A1	13-06-2012
		US 2012125476 A1	24-05-2012
		WO 2011015173 A1	10-02-2011
WO 2010142264 A1	16-12-2010	CN 102459733 A	16-05-2012
		DE 112010002449 A5	16-08-2012
		EP 2440697 A1	18-04-2012
		WO 2010142264 A1	16-12-2010
WO 2009135636 A1	12-11-2009	BE 1018116 A3	04-05-2010
		CN 102016145 A	13-04-2011
		EP 2300651 A1	30-03-2011
		WO 2009135636 A1	12-11-2009
WO 2008104355 A1	04-09-2008	BE 1017477 A3	07-10-2008
		CN 101668885 A	10-03-2010
		EP 2122027 A1	25-11-2009
		WO 2008104355 A1	04-09-2008