(No Model.) 3 Sheets—Sheet 1

C. F. T. KANDELER.

FIREPROOF FLOOR AND CEILING CONSTRUCTION.

No. 590,663. Patented Sept. 28, 1897.

Fig. 1.

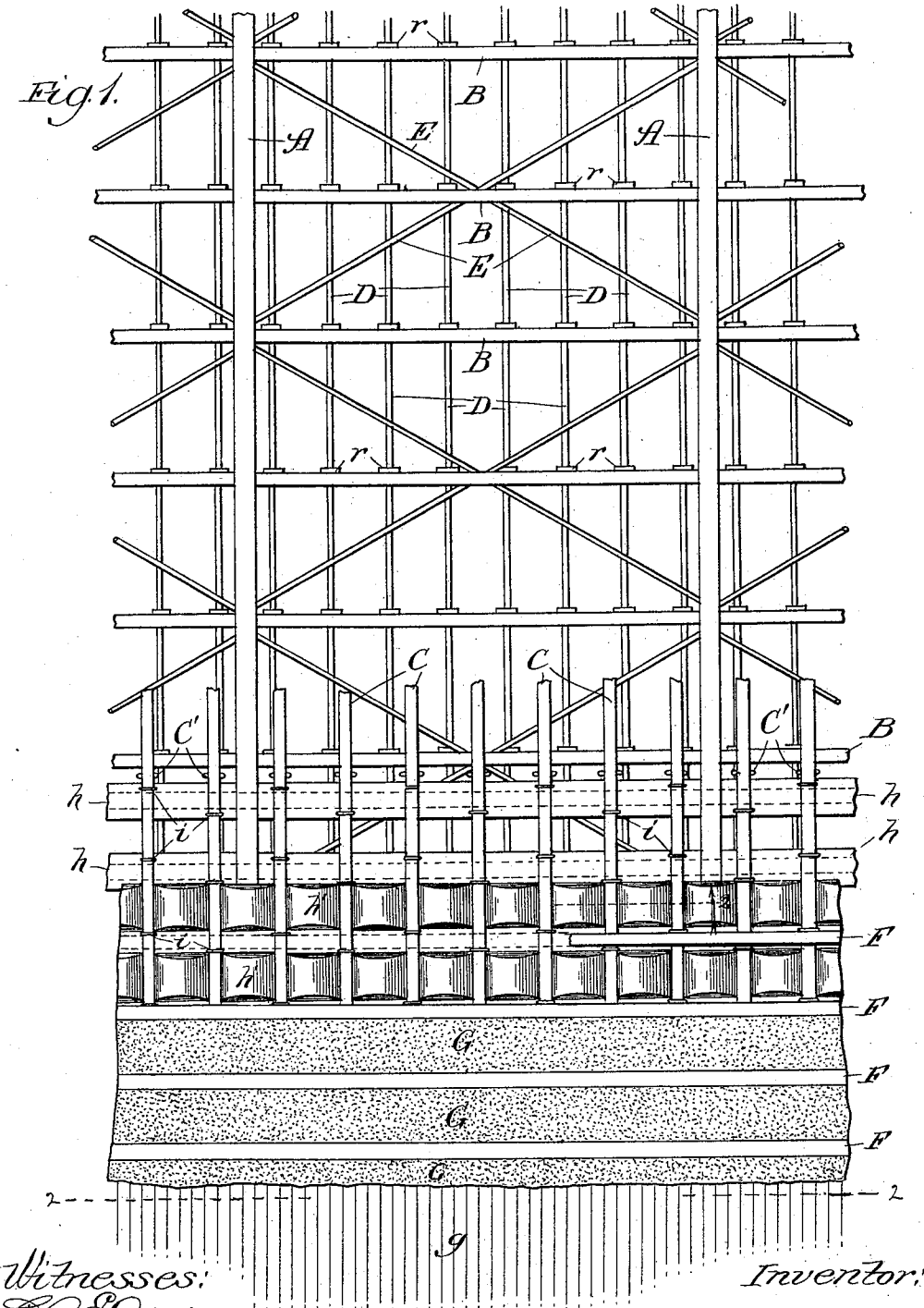

Witnesses:
Chas. E. Gaylord,
Lute J. Alter

Inventor:
Charles F. T. Kandeler,
By Dyrenforth & Dyrenforth,
Att'ys.

THE NORRIS PETERS CO., PHOTO-LITHO., WASHINGTON, D. C.

(No Model.) 3 Sheets—Sheet 2.

C. F. T. KANDELER.

FIREPROOF FLOOR AND CEILING CONSTRUCTION.

No. 590,663. Patented Sept. 28, 1897.

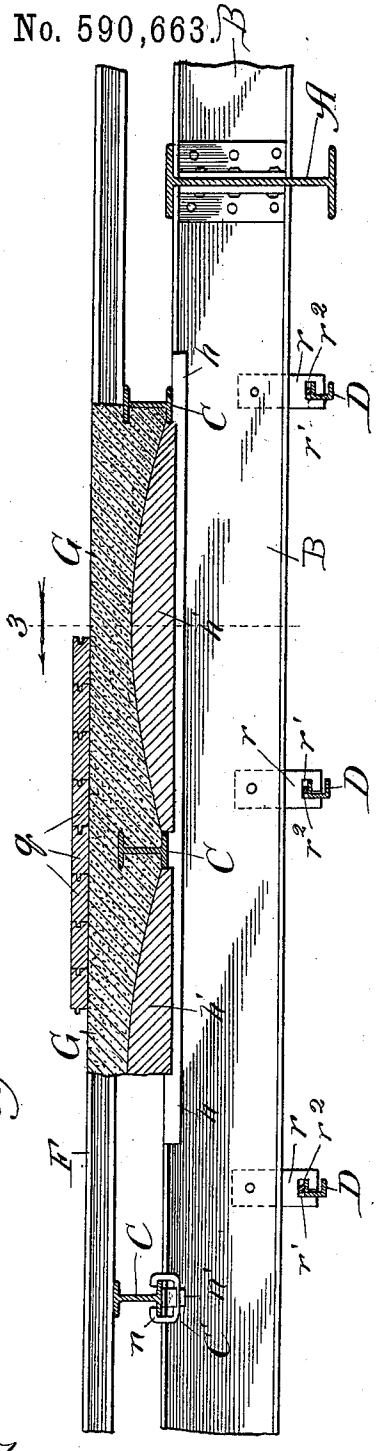

Fig. 2.

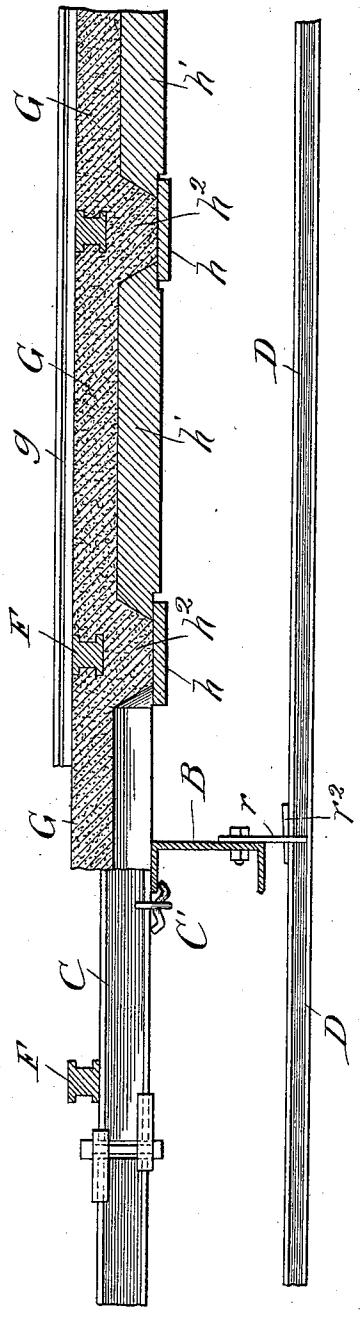

Fig. 3.

Witnesses:
Chas. E. Gaylord.
Lester J. Walker

Inventor:
Charles F. T. Kandeler.
By Dyrenforth & Dyrenforth,
Attys.

THE NORRIS PETERS CO., PHOTO-LITHO., WASHINGTON, D. C.

(No Model.) 3 Sheets—Sheet 3.

C. F. T. KANDELER.

FIREPROOF FLOOR AND CEILING CONSTRUCTION.

No. 590,663. Patented Sept. 28, 1897.

Fig. 4.

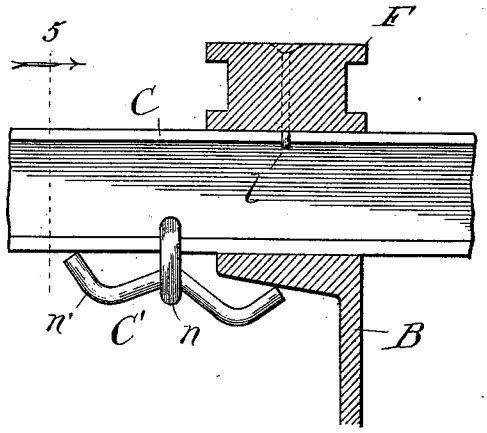

Fig. 5.

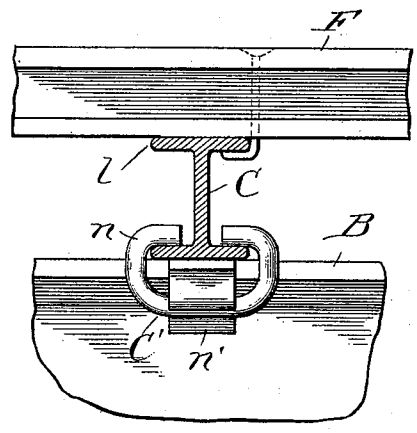

Fig. 6.

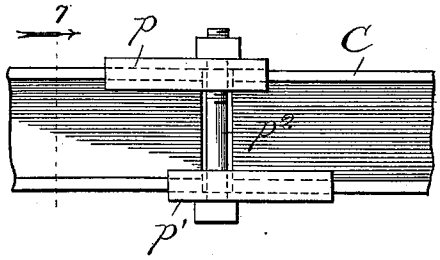

Fig. 7.

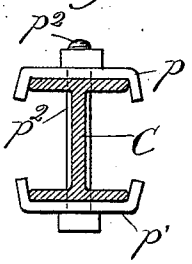

Fig. 8.

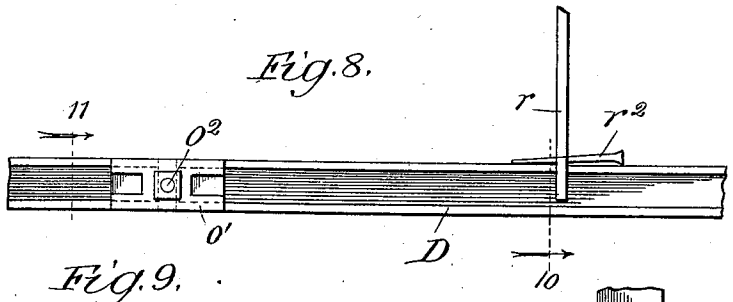

Fig. 9.

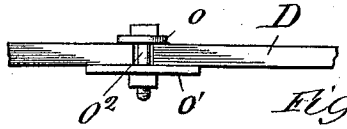

Fig. 11.

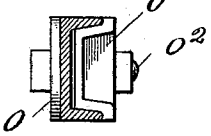

Fig. 10.

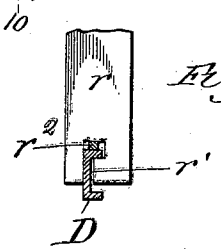

Witnesses:
Chas. E. Gaylord,
Lutie J. Potter

Inventor:
Charles F. T. Kandeler,
By Dyrenforth & Dyrenforth,
Attys.

THE NORRIS PETERS CO., PHOTO-LITHO., WASHINGTON, D. C.

UNITED STATES PATENT OFFICE.

CHARLES F. T. KANDELER, OF CHICAGO, ILLINOIS.

FIREPROOF FLOOR AND CEILING CONSTRUCTION.

SPECIFICATION forming part of Letters Patent No. 590,663, dated September 28, 1897.

Application filed April 5, 1897. Serial No. 630,754. (No model.)

To all whom it may concern:

Be it known that I, CHARLES F. T. KANDELER, a citizen of the United States, residing at Chicago, in the county of Cook and State of Illinois, have invented a new and useful Improvement in Fireproof Floor and Ceiling Construction, of which the following is a specification.

My invention relates to an improvement in the construction of buildings in which the framework is formed of metal beams and bars and is in the nature of an improvement upon the construction of fireproof floors and ceilings set forth in Letters Patent of the United States No. 560,410, granted to me on the 19th day of May, 1896.

As in my aforesaid former patent, the object of my present improvement is also to provide an economical and comparatively light floor and ceiling construction for such buildings; but my present object is to still further strengthen and lighten the structure and to enhance the fireproofing effect thereof.

To these ends my invention relates more particularly to the manner in which I form the concrete flooring, to the means employed for fastening the floor-bars to the joists, to the means for splicing the floor-bars and the ceiling-strips, and, finally, to the manner of bracing the skeleton structure of the floor.

Referring to the accompanying drawings, Figure 1 is a broken sectional plan view illustrating my improved floor and ceiling construction; Fig. 2, a section taken at the line 2 on Fig. 1, viewed in the direction of the arrow and enlarged; Fig. 3, a section taken at the line 3 on Fig. 2 and viewed in the direction of the arrow; Fig. 4, a broken view in sectional elevation showing the clip for fastening a floor-bar to a joist and a laterally-grooved floor-strip fastened upon the floor-bar; Fig. 5, a section taken at the line 5 on Fig. 4 and viewed in the direction of the arrow; Fig. 6, a broken view, in side elevation, of a floor-bar, showing the means employed for splicing it; Fig. 7, a section taken at the line 7 on Fig. 6 and viewed in the direction of the arrow; Fig. 8, a broken view, in side elevation, of a ceiling strip and hanger, showing the means employed for splicing it; Fig. 9, a top view of the ceiling-strip shown in Fig. 8; Fig. 10, a section taken at the line 10 on Fig. 8 and viewed in the direction of the arrow, and Fig. 11 a section taken at the line 11 on Fig. 8 and viewed in the direction of the arrow.

A A denote the floor-beams, which are preferably I-beams.

B B are the joists, shown in their preferred channel form, extending lengthwise at suitable intervals apart—say three feet, more or less—between the I-beams, to the webs of which the joists are fastened at their opposite ends.

C C denote the metal floor-bars, shown in their preferred form of I-bars, though their form may be that of a T-bar. These bars are placed to rest at their flanged bases upon the joist B to extend transversely of the latter at, say, about eighteen inches apart, more or less. From the joists are suspended, at suitable intervals apart to extend parallel with the floor-bars or in other desired direction, the metal ceiling-strips D, shown in their preferred channel form. These ceiling-strips are suspended through the medium of hangers r in the form of metal strips fastened, as by bolting, near their upper ends to the backs of joists B to extend below the latter and provided with rectangular slots r', opening at the lower extremities of the hangers to permit the ceiling-strips to pass through the hangers. Thus the channel form of the ceiling-strip enters at one wing the horizontal section of the slot r', and the back of the ceiling-strip extends through the vertical section of the slot. To tighten the ceiling-strips against longitudinal movement in their hangers, I drive a wedge, shown as a nail r^2, through the horizontal part of the slot r' against the strip.

For splicing the floor-bars C, to the end of preventing them effectually from sagging between the joists and to the further end of avoiding the necessity for drilling holes through their web portions to receive the fastening-bolts, I provide, to extend across the adjacent ends of each pair to be spliced, fish-plates p and p', connected by a bolt p^2, passed through them between the ends of the floor-sections. For the I form of this bar the fish-plates, which are best applied to the flanges extending along its opposite edges, should be of the channel shape clearly illus-

trated in Fig. 7, and about twice the length of one should extend over the top of one of the spliced sections, and the same length of the other should extend over the bottom of the other floor-bar, as represented in Fig. 6, so as to avoid leaving at the shorter ends of fish-plates undue lengths beyond what is necessary to afford good bearings for the floor-bar sections, which may readily be brought into true alinement with each other by tightening the nut upon the upper end of the bolt p^2.

In a somewhat similar manner and for the same purpose the ceiling-strips are spliced, but preferably with the fish-plates o and o' applied to the opposite sides of the ceiling-strip sections to cross their adjacent ends, between which the fish-plates are rigidly connected together by the bolt o^2, and because of the reëntrant form of one side of each ceiling-strip when of its preferred channel form the fish-plate applied to that side should conform to the shape of that side, as shown in Fig. 11.

For fastening the floor-bars C to the joists, as may be done wherever they cross each other, I provide a construction of clip C', formed of the two members n and n', the former being in the shape of a chain-link open between its ends to adapt it to be slipped upon the floor-bar lengthwise over its base-flange, and the latter being in the form of an undulatory bar to be passed through the member n and bear at its opposite ends, respectively, against the base of the floor-bar and the under side of the upper wing of the joist. By this construction of clip, which may be readily applied, the parts it is caused to connect are securely and reliably fastened together, since the member n' cannot become disengaged from the other member n unless the latter be first slipped lengthwise off the base-flange of the floor-bar.

It is advantageous to provide lateral bracing means for the floor-structure, which I do by means of rods E, extended horizontally and diagonally between floor-beams A and suitably fastened at their ends, where they project through holes in the webs of the floor-beams, as by means of beveled nuts. (Not shown.) It is not necessary, however, to provide the brace-rods E between each pair of floor-beams throughout the structure.

F F are the wooden floor-strips, which are longitudinally grooved, preferably on both sides, as shown, for a purpose hereinafter described. These are placed at intervals transversely of the floor-bars C, to which they are fastened, as by means of nails l, driven through them, and bent at their lower projecting ends under the upper flanges of the floor-beams.

For sustaining the concrete G until it has set a temporary sheeting is provided. This sheeting is formed of boards h, extending across the bases of the floor-bars C, to which they are temporarily fastened, as by means of twisted wires i, Fig. 1, one such board being provided below and to extend parallel with each floor-strip F, and the spaces between the sheeting-boards are spanned by arches h' or "arch-centerings," as they are termed, which rest at their opposite edges upon the opposite edge portions of the boards, thus forming between the latter and the adjacent edges of the arch-centerings wedge-shaped grooves to be filled with the concrete, for a purpose hereinafter described.

The concrete G is filled in upon the temporary sheeting to reach above the floor-bars C and flush with the upper surfaces of the floor-strips F, thereby forming a continuous (in the sense of a monolithic) layer embedding the floor-strips, the connection between which and the concrete is rendered the more binding and intimate by the grooves in the sides of the floor-strips, whereby a mutual reinforcement is afforded. To the floor-strips may be nailed the flooring-boards g.

The form of the temporary sheeting produces a thickened portion h^2 of the fireproofing concrete below and throughout the length of each floor-strip F, whereby in case of fire there is afforded to the latter better protection, and the arch-centerings hollow underneath and accordingly lessen the load of the concrete and lighten the construction.

By laying the concrete to reach flush with the upper surfaces of the floor-strips all airspace is avoided below the flooring g, with the advantages of excluding vermin and affording better deadening and more effective fireproofing, and the additional loading with concrete to extend it so high is more than compensated for by the tightening due to the hollow sections produced by the arch-centerings.

What I claim as new, and desire to secure by Letters Patent, is—

1. In a fireproof-floor construction, the combination with joists of floor-bars extending across and resting on the joists, a sheeting comprising boards h and arches h', having beveled ends at which they rest on said boards and a filling of concrete extending between and over the floor-bars, substantially as described.

2. In a fireproof-floor construction, the combination with joists of floor-bars extending across and resting on the joists, floor-strips extending across and resting on and fastened to the floor-bars, and a monolithic filling of concrete extending between and over the floor-bars and embedding the floor-strips, substantially as described.

3. A fireproof-floor construction comprising, in combination, floor-beams, joists supported by the floor-beams, floor-bars extending across and resting on the joists, floor-strips extending across and resting on and fastened to the floor-bars, and a monolithic filling of concrete extending between and over the floor-bars and embedding the floor-strips, substantially as described.

4. In a fireproof-floor construction, the com-

bination with joists of floor-bars extending across and resting on the joists, floor-strips extending across the floor-bars and a filling of concrete extending between and over the floor-bars and embedding said strips and arched underneath between thickened portions extending along the floor-strips, substantially as described.

5. In a fireproof-floor construction, the combination with joists, of floor-bars extending across and resting on the joists, floor-strips extending across and resting on and fastened to the floor-bars, and a fireproof covering extending between and underneath the floor-strips, substantially as described.

6. In a fireproof-floor construction, the combination with joists B of floor-bars C extending across and resting on the joists and clips C′ fastening the floor-bars to the joists, each clip comprising a link n embracing a floor-bar across its base-flange and an undulatory bar n' having two or more bends passing through the part n and bearing at its opposite ends respectively against the floor-bar and flange of the joist, said bends in the bar preventing it from dropping out of the part n, substantially as described.

7. In a fireproof-floor construction, the combination with the joists of floor-bars extending across and resting thereon, said floor-bars having the perpendicular ends of adjacent sections straight throughout and spaced apart a distance greater than the width of the bolt to pass between them, fish-plates crossing the ends of adjacent sections of a floor-bar to splice them and a bolt passing between said ends and connecting the fish-plates, substantially as described.

8. In a fireproof-floor construction, the combination with the **I**-shaped bars C extending across and resting on the joists, of channel metal fish-plates p and p' crossing the ends of adjacent sections of a floor-bar along the top and base flanges thereof to splice the sections, and a bolt p^2 passing between said ends and connecting the fish-plates, substantially as described.

9. In a fireproof floor and ceiling construction, the combination with a ceiling-strip of fish-plates crossing the perpendicular ends of adjacent sections of said strips to splice them at opposite sides thereof, said ends being straight throughout and spaced apart a distance greater than the width of the bolt to be passed between them and a bolt passing between said ends and connecting the fish-plates, substantially as described.

10. In a fireproof floor and ceiling construction, the combination with a ceiling-strip D having a reëntrant side of fish-plates o and o' crossing the perpendicular ends of adjacent sections of said strip to splice them at opposite sides thereof, said ends being straight throughout and spaced apart a distance greater than the width of the bolt to be passed between them, and the fish-plate o' conforming to the reëntrant side of the ceiling-strip, and a bolt o^2 passing between said ends and connecting the fish-plates, substantially as described.

11. In a fireproof floor and ceiling construction, the combination with floor-beams, joists and a suspended ceiling, of diagonal lateral bracing above the ceiling, substantially as described.

12. In a fireproof floor and ceiling construction, the combination of floor-beams, joists, floor-bars resting on the joists, a suspended ceiling below the floor, and diagonal lateral bracing below the floor-bars and above the ceiling, substantially as described.

CHARLES F. T. KANDELER.

In presence of—
J. H. LEE,
R. T. SPENCER.