Dec. 22, 1942. R. E. BURK ET AL 2,306,011

CATALYTIC APPARATUS

Filed Sept. 19, 1939

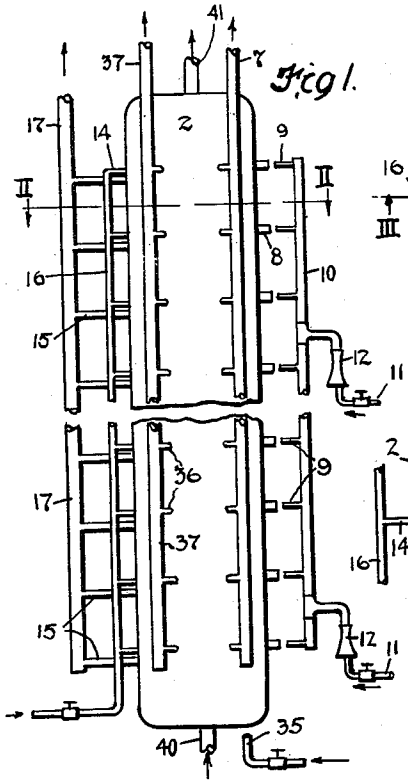

Fig. 1.

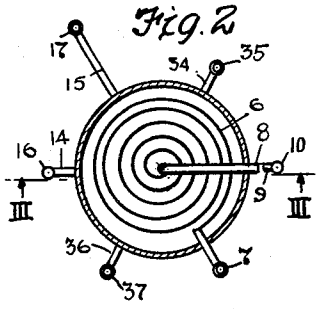

Fig. 2.

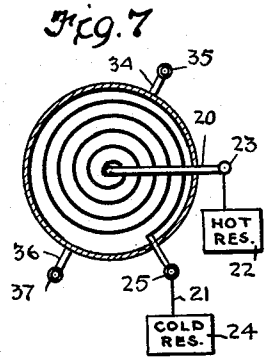

Fig. 7.

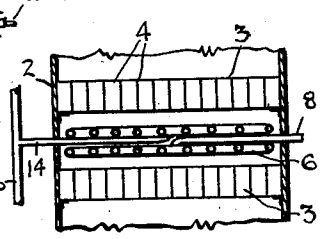

Fig. 3.

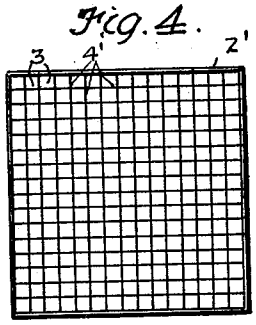

Fig. 4.

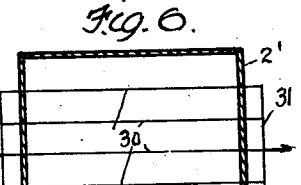

Fig. 6.

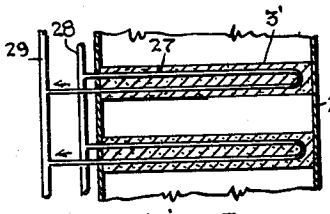

Fig. 5.

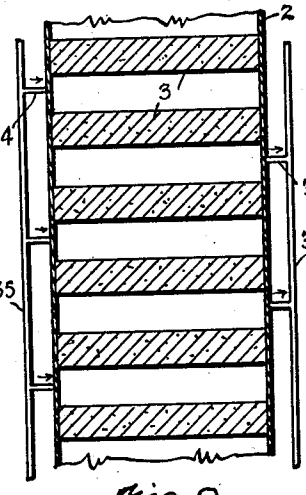

Fig. 8.

Fig. 9.

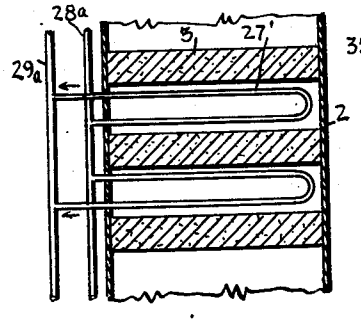

Fig. 5a.

INVENTORS
Robert E. Burk,
Everett C. Hughes and
Elmer Kropp.

BY Oberlin, Limbach & Day ATTORNEYS.

UNITED STATES PATENT OFFICE

2,306,011

CATALYTIC APPARATUS

Robert E. Burk and Everett C. Hughes, Cleveland Heights, and Einar Kropp, Cleveland, Ohio, assignors to The Standard Oil Company, Cleveland, Ohio, a corporation of Ohio

Application September 19, 1939, Serial No. 295,630

12 Claims. (Cl. 23—288)

In operation with catalysts requiring considerable amounts, it has been customary to expose the catalyst in tubes or in massive beds. Considerable pressure is required to force operating material or regenerating gases through. If in the operation of the catalyst considerable heat is disengaged, installations of such character are very difficult to control with sufficient accuracy. Local overheating occasions losses in material or in catalyst or both. And with catalysts where it is necessary to supply heat it has been difficult to apply it sufficiently uniformly. In accordance with the present invention catalytic material may be provided however in an arrangement making possible a very complete control of heat transfer, either in addition or subtraction, and the catalyst is arranged for special efficiency of operational contact of material treating. Other advantages will be apparent from the description following.

To the accomplishment of the foregoing and related ends, the invention, then, comprises the features hereinafter fully described, and particularly pointed out in the claims, the following description and the annexed drawing setting forth in detail certain illustrative embodiments of the invention, these being indicative however, of but a few of the various ways in which the principle of the invention may be employed.

In said annexed drawing—

Fig. 1 is a side elevational view of apparatus in accordance with the invention; Fig. 2 is a transverse section taken on a plane substantially indicated by line II—II, Fig. 1; Fig. 3 is a vertical sectional view taken on a plane substantially indicated by line III—III, Fig. 2; Fig. 4 is a transverse sectional view of a modification, showing particularly the detail of arrangement of the catalyst; Fig. 5 is a vertical sectional view analogous to Fig. 3, but showing semi-diagrammatically a modification of the heat transfer coil placement; Fig. 5*a* is a similar view of modified construction; Fig. 6 is a transverse section illustrating a still further modification of heat transfer coil connection; Fig. 7 is a transverse section analogous to Fig. 2, showing a modification of heat transfer detail; Fig. 8 is a vertical section analogous to Fig. 3, showing semi-diagrammatically the arrangement of regenerating gas inlet and outlet connections; and Fig. 9 is a similar view of a modification thereof.

Referring more particularly to the drawing, there is shown a container 2, within which are a multiplicity of superposed shallow trays of catalyst 3, these being spaced from each other by suitable spacing means to accommodate heat transfer connections between. Desirably, the bottom of the trays is pervious, as of suitable mesh to hold a granular catalyst mass and permit flow of fluid material therethrough, and preferably each tray has grid 4 running in one or both transverse directions, the mass of catalyst thereby being divided into relatively small cell masses, and by having the grids of heat-conducting material each cell mass is in effective contact with the heat-conducting grid. These cells may be dimensioned for example on the order of two inches in depth and one by one inch in the transverse plane, and thereby no portion of the catalyst is more than one inch from a free exposed surface. The cross-sectional form of the catalyst tray may be as desired, whether circular or rectangular. In the latter, as in Fig. 4, the walls 4' exactly divide the space into whatever number of cells are desired for any particular installation. Between trays as indicated, is means for heat transfer, and is shown more particularly in Figs. 1 and 2, this may involve a coil 6 for heating, being connected at its inlet end to a source of heat, and at its outlet end to an exhaust or flue 7. This arrangement involves a fire-tube type of heat application and each coil inlet 8 is supplied with a nozzle 9 slightly spaced, the nozzles being connected to a manifold 10 which has a fuel supply 11 as for gas or liquid fuel, and an air mixer 12 necessary for ignition. The flame and products of combustion supplies the fire-tube system and the flue gases discharge out through the draft flue 7. With a heat supply arrangement of this character, at high temperatures such as are best for some kinds of catalyst in catalytic operation, the catalyst can be accurately controlled.

As illustrated also in Figs. 1 and 3, a cooling coil, as of flat spiral or pancake form, is arranged between trays, having inlet and outlet connections 14, 15, to suitable manifolds 16, 17, whereby a cooling fluid is circulated through the coil. Such arrangement particularly allows control for either low temperature catalytic operations or for high temperature catalytic operations, as in the latter case water for instance may be introduced, and be converted to steam in the coils and carry off the heat correspondingly, the steam being further applicable for accompanying usages.

Where the especially high temperature range of a fire-tube system is not necessary, a single heat transfer system of coils, also for instance of pancake type as the foregoing, may be arranged, as in Fig. 7 with a connection 20 for hot fluid, and a connection 21 for cold fluid, the connections being to manifolds, as already indicated. If the

heating fluid inlet have its ultimate connection to a hot reservoir 22 for supply by gravity or a suitable pump 23 into the coils, and the outlet thereof have connection to a receiver 24, with some catalysts and catalytic operations the same fluid may be used both for imparting heat and for abstracting heat, it being returned from the cold reservoir 24, as by suitable pump means 25, when cooling action is desired. Depending upon the temperature range of action, the medium of exchange may be steam, condensing into water, or for high temperature ranges it may be a molten salt or metal, as for instance lead, tin, zinc, mercury, sulfur, mixture of nitrites, sodium sulfocyanide and potassium sulfocyanide eutectic, zinc chloride, 41 per cent lithium chloride and 59 per cent potassium chloride, zinc chloride-iron chloride, KOH-NaOH.

Where the contact of heat transfer coils as located between the trays is not sufficiently close, the coils 27 may be placed directly in the trays in contact with the catalyst 3', as indicated in Fig. 5. And, in the connecting up of the coils, they may have connection to supply and exhaust manifolds 28, 29, as in Fig. 5, or where preferred instead of the pancake type of coil as foregoing, there may be inlet connections at one side, as in Fig. 6, and the coils may take the form of straight-through sections 30 to an outlet manifold 31. As a further refinement, alternate coils may be connected reversely to the manifolds, such as by having their inlet connections to the supply manifold 28a, Fig. 5a, to the respectively opposite ends of the coils, and the outlet connections to the exhaust manifold 29a. With the flow of the heat transfer medium thus occurring in one direction in one coil and in the opposite direction in the next coil and so on, further uniformity of heat transfer is effected. And again, the coils may be between or in the catalyst trays, as may be preferred.

Where the particular catalyst operated requires regenerating treatment by the supply of some regenerating gas, whether air, oxygen or other gas, the connections as shown more particularly in Fig. 8, permit the introduction of the regenerating gas by the connections 34 from the manifold 35, into alternate spaces between trays, whereby the treating gas may pass through the trays of catalyst and discharge from the intervening spaces by connections 36 to discharge manifold 37. Very low pressure is involved, in contrast to the old practice of having to force regenerating gas through the total thickness of the catalyst. And in some cases, sufficient contact and action may be had by flow over the surfaces, and as illustrated in Fig. 9, the inlet manifold 35' may have its connections 34' leading to each space between trays, and the outlet connections 36' are respectively opposite and lead to the discharge manifold 37'.

As readily seen, the apparatus permits considerable versatility in type of catalyst and materials operated upon. Flow through the catalyst is uniform and channeling is avoided and high linear velocities are permitted, which minimizes side reactions. And in regenerating, low pressure air or gas may be employed thus effecting a very great advantage over old usages necessitating high pressure regenerating gas. The material to be catalyzed may be put through the trays in series when on stream, and the regenerating gas may then be put through in parallel. By reason of its very thorough and complete exposure of the catalyst, and the uniform and accurate temperature control possible, operation with such critical catalysts as those of the oxide type, as for example on hydrocarbons, alcohols, etc., is particularly advantageous, the feed material being introduced for instance at the connection 40, Fig. 1, and passing through the trays in succession or series, thereby contacting intimately with the catalyst, as temperature-controlled by the control means, the products pass off by connection 41 to further desired apparatus, as fractionators, condensers, etc.. A temperature control coil of spiral wound pancake form has an advantage of making possible the directing of the temperature control fluid first to the center of the catalyst thereby giving a more uniform temperature head across the catalyst section than was possible by former arrangements.

Other modes of applying the principle of the invention may be employed, change being made as regards the details described, provided the features stated in any of the following claims, or the equivalent of such, be employed.

We therefore particularly point out and distinctly claim as our invention:

1. A catalytic reaction apparatus comprising a container, connections for supplying material to be reacted and for discharging reaction products, multiple superposed shallow pervious bottom trays of catalyst in said container, heat-conducting grids forming vertical partitions in said trays dividing the catalyst into cells of one by one inch dimension in horizontal plane and two inches deep, heating coils between trays out of contact with the catalyst, a nozzle opposite the inlet of each coil and feeding thereinto, a discharge outlet connection from each said coil, connections to said nozzle from fuel and air for supplying combustion flame, cooling coils between trays out of contact with the catalyst, connections for supplying cooling fluid thereto, connections for supplying a regenerating gas in alternate spaces between trays, and connections for discharge of the regenerating gas from the intervening tray spaces.

2. A catalytic reaction apparatus comprising a container, connections for supplying material to be reacted and for discharging reaction products, multiple superposed shallow pervious bottom trays of catalyst in said container, heat-conducting grids forming vertical partitions in said trays dividing the catalyst into cells, heating coils between trays out of contact with the catalyst, a nozzle opposite the inlet of each coil and feeding thereinto, a discharge outlet connection from each said coil, connections to said nozzle from fuel and air for supplying combustion flame, cooling coils between trays out of contact with the catalyst, connections for supplying cooling fluid thereto, connections for supplying a regenerating gas in alternate spaces between trays, and connections for discharge of the regenerating gas from the intervening tray spaces.

3. A catalytic reaction apparatus comprising a container, connections for supplying material to be reacted and for discharging reaction products, multiple superposed shallow pervious bottom trays of catalyst in said container, heat-conducting grids in said trays forming vertical partitions dividing the catalyst into cells, heating coils between trays out of contact with the catalyst, connections for supply of heating fluid and discharge therefrom, cooling coils between trays out of contact with the catalyst, connections for supplying cooling fluid thereto, con-

nections for supplying a regenerating gas in alternate spaces between trays, and connections for discharge of the regenerating gas from the intervening tray spaces.

4. A catalytic reaction apparatus comprising a container, connections for supplying material to be reacted and for discharging reaction products, multiple superposed shallow pervious bottom trays of catalyst in said container, heat-conducting grids in said trays forming vertical partitions dividing the catalyst into cells, heat transfer coils between trays out of contact with the catalyst, connections for supplying a regenerating gas between trays, and connections for discharging the regenerating gas.

5. A catalytic reaction apparatus comprising a container, multiple superposed shallow trays of catalyst therein, heat-conducting grids forming vertical partitions in said trays preventing lateral fluid-flow and dividing the catalyst into portions one by one inch dimension in horizontal plane and two inches deep and forming heat-conductive paths laterally at various angles leading to the outside, heat transfer coils in association with the trays, and connections for regenerating gas supply and discharge to the trays.

6. A catalytic reaction apparatus comprising a container, multiple superposed shallow trays of catalyst therein, heat-conducting grids forming vertical partitions in said trays preventing lateral fluid-flow and dividing the catalyst into cells, heating coils between trays out of contact with the catalyst, cooling coils between trays out of contact with the catalyst, and connections to said heating coils and said cooling coils respectively.

7. A catalytic reaction apparatus comprising a container, connections for supplying material to be reacted and for discharging reaction products, a plurality of superposed shallow trays of catalyst therein, grids in said trays forming heat-conductive paths laterally at various angles leading to the outside, heat transfer coils, means for supplying hot fluid to said coils, and means including a conditioning reservoir for returning said fluid in cooler condition.

8. A catalytic reaction apparatus comprising a container, a plurality of superposed shallow trays of catalyst therein, and cell-forming grids forming vertical partitions in the trays preventing lateral fluid-flow and forming heat-conductive paths laterally at various angles leading to the outside dividing the catalyst into small cells.

9. A catalytic reaction apparatus comprising a container, connections for supplying material to be reacted and for discharging reaction products, a plurality of superposed shallow trays of catalyst therein, heat transfer coils of spiral wound pancake form between trays, and means for supplying regenerating gas between trays.

10. A catalytic reaction apparatus comprising a container, connections for supplying material to be reacted and for discharge of reaction products, multiple superposed shallow pervious bottom trays of catalyst in said container, and grids in the trays blocking lateral fluid-flow and forming vertical partitions dividing the catalyst into cells and forming heat-conductive paths laterally at various angles leading to the outside.

11. A catalytic reaction apparatus comprising a container, connections for supplying material to be reacted and for discharge of reaction products, a plurality of superposed shallow trays of catalyst in said container for serial passage of material to be catalyzed, grids in said trays forming heat-conductive paths laterally at various angles leading to the outside, heat transfer coils in association with the trays, feed and discharge pipes for the coils, adjacent coils having connections to these respectively reversed for routing fluid through the coils in opposite directions, and means for supplying regenerating gas to said trays in multiple.

12. A catalytic apparatus comprising a container, connections for supplying material to be reacted and for discharging reaction products, a plurality of superposed shallow trays of catalyst in said container, grids in said trays forming heat-conductive paths laterally at various angles leading to the outside, heat transfer coils in association with the trays out of contact with the catalysts, and feed and discharge pipes for the coils, adjacent coils having connections to these respectively reversed for routing fluid through the coils in opposite directions.

ROBERT E. BURK.
EVERETT C. HUGHES.
EINAR KROPP.