# United States Patent

**McMann**

[15] **3,680,155**

[45] **Aug. 1, 1972**


## [54] FOLDABLE BABY CRIB


[72] Inventor: **John R. McMann,** 3530 Donald St., Eugene, Oreg. 97405



[22] Filed: **April 16, 1970**

[21] Appl. No.: **29,002**

[52] **U.S. Cl.** .....**5/99,** 5/131, 5/331

[51] **Int. Cl.**.....**A47c 29/00,** A47d 7/00, A47c 21/00

[58] **Field of Search**.....5/99, 177, 180, 11, 331



[56] **References Cited**

UNITED STATES PATENTS

| | | | |
|---|---|---|---|
| 2,462,524 | 2/1949 | Mattedi | 5/131 X |
| 2,790,183 | 4/1957 | Hurlin | 5/99 R |
| 1,259,825 | 3/1918 | Basile | 5/99 |
| 1,278,568 | 9/1918 | Basile | 5/99 |
| 2,809,381 | 10/1957 | Colaner | 5/331 X |

FOREIGN PATENTS OR APPLICATIONS

| | | | |
|---|---|---|---|
| 548,209 | 11/1957 | Canada | 5/331 |



*Primary Examiner*—Paul R. Gilliam

*Attorney*—Buckhorn, Blore, Klarquist and Sparkman



[57] **ABSTRACT**

A foldable baby crib includes a mattress supporting frame with foldable legs, and foldable head and foot boards at either end of the frame. Slatted crib sides are provided with tongue members slidably received in slotted brackets arranged for allowing vertical disposition of the sides in hooked relation to the head and foot boards, and alternatively facilitating folding over of the crib sides in juxtaposition with each other on top of the crib mattress. The head and foot boards fold from either end over the aforementioned sides to complete a flat package. Each crib side is also removable in a vertically downward direction.


**2 Claims, 6 Drawing Figures**

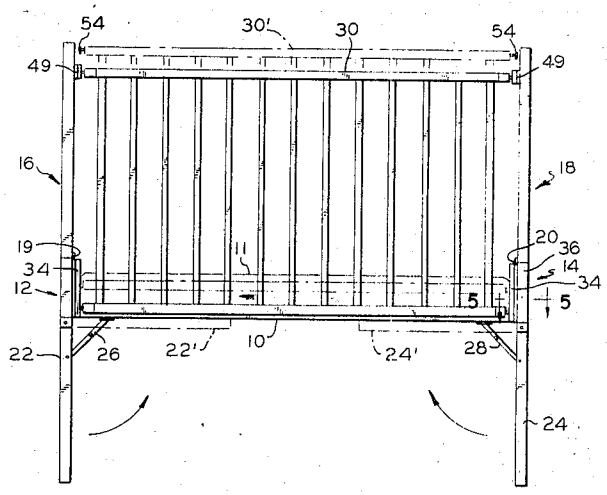

FIG. 1

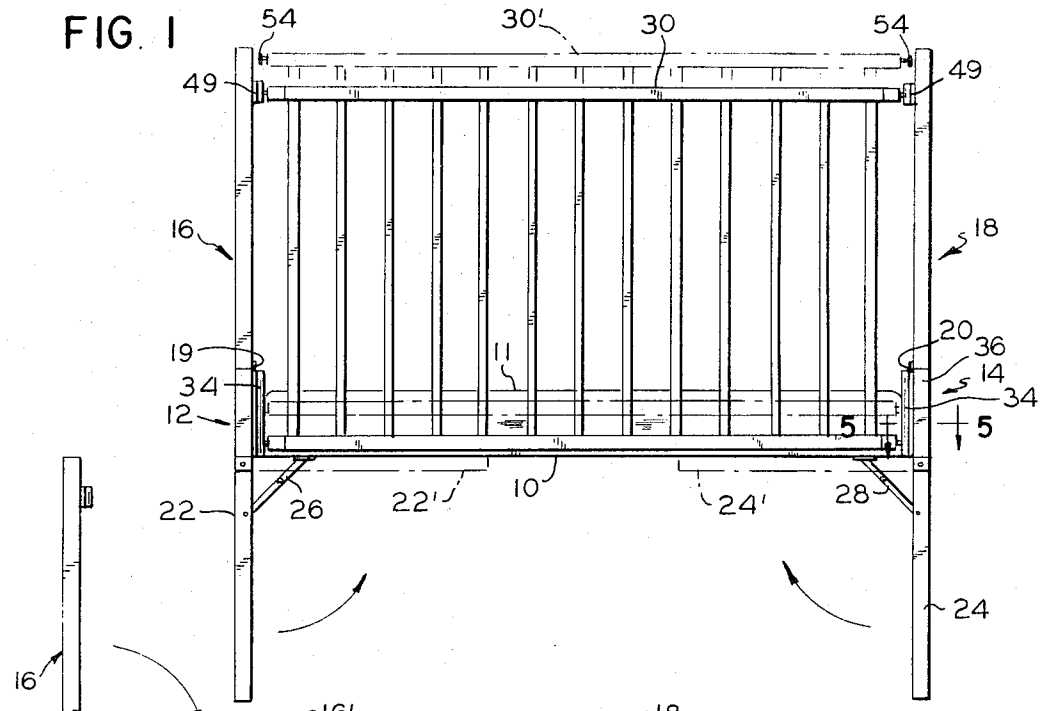





FIG. 2

FIG. 3

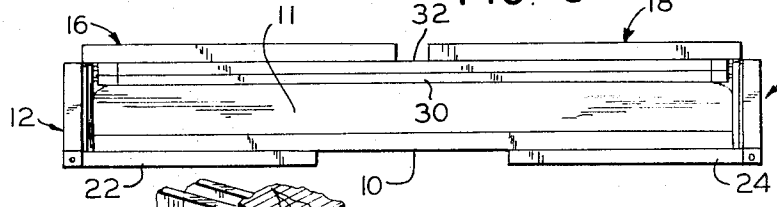


FIG. 6

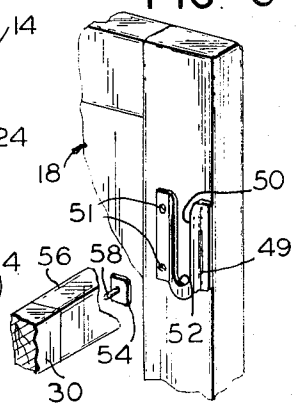


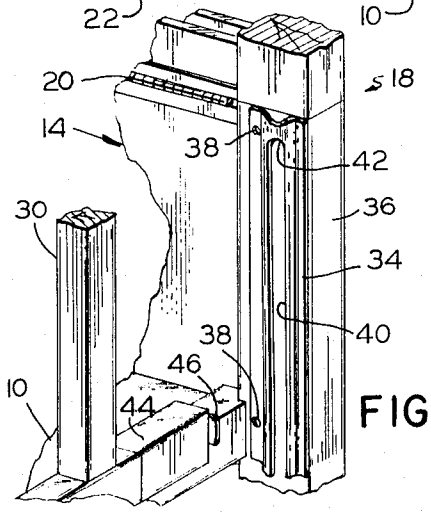


FIG. 4

FIG. 5

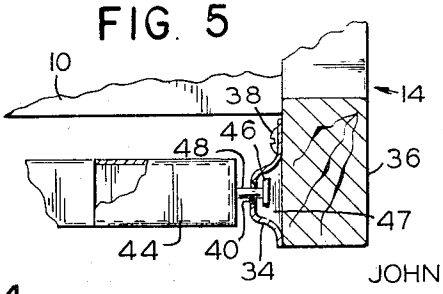


JOHN R. McMANN
INVENTOR
BY
BUCKHORN, BLORE, KLARQUIST & SPARKMAN
ATTORNEYS

# FOLDABLE BABY CRIB

## BACKGROUND OF THE INVENTION

This invention relates to a foldable baby crib and more particularly to a foldable baby crib having advantageous operating features, with these features facilitating a desirable appearance.

The frequent need for moving baby beds, play pens, and the like from place to place has led to the availability of a number of different collapsible baby beds. Many of these products are provided with a number of mechanical features rendering the same complicated, utilitarian, and unlike the conventional baby crib in function and appearance. Thus, many prior foldable devices are disproportionate for the sake of attaining collapsibility, and usually are not provided with slidable sides which can be moved downwardly out of the way when baby care is necessary from the side of the crib. These constructions are not well adapted for the baby crib which is to be moved occasionally, but which is normally called upon for conventional crib use.

## SUMMARY OF THE INVENTION

According to the present invention, a collapsible baby crib includes a mattress supporting frame having collapsible legs as well as foldable head and foot boards at either end thereof. Crib sides, which normally extend upwardly from the frame, have articulated connections therewith providing vertical sliding movement for each side relative to the frame as well as pivotal movement of the sides over the frame. The sides are normally engageable with hook means provided on the head and foot boards when the sides are vertically upraised. The sides may also be slid upwardly and pivoted over the mattress for disposition in juxtaposed relation with each other and with the mattress, after which the head and foot boards can be closed thereover. Alternatively, the sides may be slid downwardly providing access to the mattress from the side thereof.

The crib constructed in this manner functions in substantially the same manner as a conventional non-foldable crib. It also has the appearance of a conventional crib and is therefore an acceptable piece of furniture for home use. However, the crib, together with mattress, can be folded into a completely flat package for ready transportation from place to place. This convertability to a flat configuration does not require any mechanical disassembly of the crib parts.

It is an object of the present invention to provide an improved foldable baby crib.

It is another object of the present invention to provide an improved foldable baby crib which functions during normal operation in a manner similar to conventional non-foldable cribs.

It is another object of the present invention to provide an improved foldable baby crib which is proportioned in a manner similar to the usual non-foldable baby crib.

It is another object of the present invention to provide an improved baby crib with sides which are not only foldable inwardly over the mattress, but which are also slidable downwardly for providing access from the side of the crib.

The subject matter which I regard as my invention is particularly pointed out and distinctly claimed in the concluding portion of this specification. The invention, however, both as to organization and method of operation, together with further advantages and objects thereof, may best be understood by reference to the following description taken in connection with the accompanying drawings wherein like reference characters refer to like elements.



## DRAWINGS

FIG. 1 is a side view of a foldable baby crib according to the present invention;

FIG. 2 is a partially broken away side view of the same crib in a partially folded condition;

FIG. 3 is a third side view of the crib which has been completely folded into a substantially flat package;

FIG. 4 is a perspective view, partially broken away, illustrating an articulated connection for the sides of the crib according to the present invention;

FIG. 5 is a cross-sectional view, partially broken away, also illustrating the FIG. 4 articulated connection, FIG. 5 being taken at 5—5 in FIG. 1, and

FIG. 6 is a perspective view of fastening hook means and mating means therefor, according to the present invention.

## DETAILED DESCRIPTION

Referring to the drawings, the foldable crib according to the present invention comprises a frame including a base **10**, suitably formed of a relatively thick, flat plywood panel and base ends **12** and **14** secured thereto in upright position by means of wood screws, steel angle brackets, or the like. A mattress **11** is positioned on top of base **10**. At the top edges of base ends **12** and **14**, a head board **16** and a foot board **18** are respectively hingedly connected by means of piano hinges **19** and **20** while at the lower edges of the base ends, foldable legs **22** and **24** are hingedly secured. The legs may alternatively be joined to the base itself. The legs may be provided in pairs at the head end and foot end of the crib, such pairs being structurally joined together by bracing means (not shown). Toggle braces **26** and **28**, disposed between the legs and base **10**, normally support the legs in a vertical position, but when pivoted these braces allow the folding of the legs underneath base **10** as illustrated at **22'** and **24'**, respectively.

The crib is also provided with slatted sides **30** and **32**, with side **30** located in the foreground of FIG. **1**. The sides normally extend upwardly from the frame, i.e. upwardly from base **10**, having an articulated connection therewith providing vertical sliding movement for each side relative to the frame, as well as pivotal movement of the sides over the frame. This connection is more clearly illustrated in FIGS. **4** and **5**, and includes a vertically disposed metal bracket **34** secured to vertical end piece **36** of base end **14** by means of wood screws **38**. The bracket **34** is provided with a vertical slot **40** which is open at its lower end, but which is concluded at its upper end by stop **42**. Bracket **34** is substantially U-shaped in cross section as illustrated in FIG. **5** with the slot **40** disposed at the bottom of the U, for thereby enclosing a channel **47** between bracket **34** and member **36**. The adjacent lower corner of side **30** is provided with a rectangular metal sleeve **44** secured over the end of the lower horizontal slat of the side **30**. This sleeve carries a metal tongue **46** adapted to be slidably

received, vertically upwardly in slot **40** of bracket **34**, between the bracket and the end piece **36** of base end **14**. The tongue is joined to sleeve **44** by means of round shank **48** passing through slot **40**. The cross-sectional relationship is as illustrated in FIG. **5**. It is understood that a similar articulated connection including a slotted bracket **34** is provided at each lower corner of each crib side between the respective crib sides and base ends **12** and **14**.

Let us assume side **30** has been engaged by slotted brackets **34** on the foreground side of the crib in FIG. **1**, and it is desired that side **30** be secured in a normal, substantially vertical position. The side **30** is upraised to a position indicated in dashed lines at **30'**, with lower tongues **46** sliding along slots **40** in slotted brackets **34**. The upper corners of side **30** are now engageable with hook means provided adjacent the upper corners of the sides. One such hook means is illustrated in FIG. **6** and is disposed on the inner side of foot board **18**, that is, on the side facing head board **16** and immediately above slotted bracket **34** on member **36**. This hook means comprises a bracket **49** secured to foot board **18** with wood screws **51** and provided with a vertical top opening slot **50** which concludes at a lower stop **52**. Slot **50** receives a mating means comprising a tongue **54** joined to rectangular sleeve **56** with shank **58**. Sleeve **56** is in turn secured over the end of the upper horizontal slot of side **30**. Thus, when side **30** is raised to the position illustrated in dashed lines at **30'** in FIG. **1**, the tongue **54** is lowerable into slot **50** until shank **58** rests against stop **52**, with tongue **54** being located between bracket **49** and foot board **18**. The cross section is U-shaped, similar to that illustrated in FIG. **5** with respect to the previously mentioned slotted bracket **34**. As tongue **54** slides downwardly within slot **50** of bracket **49**, the lower tongue **46** slides downwardly inside bracket **34**.

It is understood that a similar upper corner hook means construction is located at each of the upper four corners of the crib, that is, on the upper inside wall of the head board and on the upper inside wall of the foot board. The bracket constructions are horizontally juxtaposed such that a side, for example side **30**, will rest with a shank **58** against a lower stop **52** of a bracket **49** at each upper end of side **30**, with the side **30** thereby secured in an upright position. It is understood that latching means may be provided across the tops of slots **50** in brackets **49**, if desired, in order to lock the side in position.

It is observed that when the side **30** is in upright secured relation relative to the crib head board and foot board as just described, the lower portion of side **30** slides below the top level of mattress **11** whereby an infant is protected from wedging an arm or leg between the mattress and the lower edge of side **30**.

In order to acquire access to the side of the crib, i.e. in order to provide normal infant care upon the crib mattress, a side **30** may be lowered downwardly. This is accomplished by first raising side **30**, e.g. to the position illustrated at **30'** in FIG. **1**, such that tongues **54** clear the tops of slotted brackets **49**. Then, the top of side **30** is moved slightly outwardly away from the crib to clear brackets **49** and the side is dropped. At this time, tongues **46** at the lower corners of side **30** drop from slots **40** in slotted members **34**. With the side **30** dropped vertically to the floor, the top edge thereof will be on a level just above the mattress **11** providing ready access to the mattress surface, but with a short portion of the crib side extending to a level just above the mattress level. When the required access is no longer needed, side **30** is once again raised, while positioning tongues **46** enter slots **40** at each end of the crib. The side is then further raised until tongues **54** are above the tops of slots **50**, allowing downward insertion of tongues **54** into hooked relation with slots **50** as hereinbefore described. The upper stop **42** of each bracket **34** is positioned such that the side **30** can be moved high enough for entry of tongues **54** into slot **50**.

While the above operations have been described in particular connection with side **30**, it is understood that a side **32** on the opposite side of the crib is substantially identical and operates in the same manner.

The crib according to the present invention is foldable into a flat package by first folding sides **30** and **32** over mattress **11**. It has been noted that, in normal vertically secured position, the lower edge of side **30**, for example, is below the top surface of mattress **11**. However, as has also been noted, side **30** is raisable upward from this position. For folding, side **30** is first raised upwardly until tongues **54** clear slots **50** and brackets **49**, and the side is then pivoted into a horizontal position on top of mattress **11**. At this time, the tongues **46** will slide nearly to the top of slots **40**. The sides **30** and **32** have a height approximately or nearly equal to the width of the crib, so that with the sides in horizontal position, they extend nearly across the crib. This is not a necessary requirement, but provides ample height for each crib side for giving the desired confining enclosure to the infant when the crib sides are vertical, with ample storage room for the sides when folded over the mattress. This construction can be distinguished from foldable crib arrangements wherein the crib sides are foreshortened vertically in order to fit within a smaller space when folded. It is noted that as the crib side **30** folds over the mattress, the lower edge thereof rises to the top level of the mattress as permitted by the sliding action of tongues **46** in slots **40**.

After side **30** has been folded to a horizontal position, side **32** is folded from the opposite direction over side **30** and the mattress as illustrated in FIGS. **2** and **3**. Side **32** similarly extends nearly across the top of the crib. Since side **32** folds on top of side **30**, the tongues **46** associated therewith will rise further in corresponding slots **40**, usually against the upper stops **42**. Of course, the abutment against the stops **42** is not a requirement, inasmuch as the slotted brackets **34** and base ends **12** and **14** can be made somewhat longer. However, it is generally desirable that base ends **12** and **14** not be much higher than the mattress. Therefore, it is convenient to provide a height thereof sufficient for providing space for brackets **34** just accommodating the tongues **46** of side **32** in a horizontal position. The stops **42** prevent the side from leaving a pivotally anchored condition, and in general secures the crib sides during transport thereof. While in the present example side **32** is illustrated as foldable upon side **30**, it is clearly understood that the reverse operation may take place with the slotted members **34** accommodating the reversed slidable juxtaposed positioning of the two sides **30** and **32**. Therefore, the folding operation of the crib is easily accomplished without having to follow a particular procedure in folding down the sides.

After the sides are folded as illustrated in FIG. 2, the head board 16 and the foot board 18 are also folded over the sides. The foot board 18 is illustrated in folded position in FIG. 2, and it can be seen that head board 16 is foldable down to a position illustrated in dashed lines at 16'. The combined height of the head board and foot board is slightly less than the overall length of the crib so that the head board and foot board do not interfere with one another when folded down. Nevertheless, the head and foot boards extend in their vertical positions to a height commensurate with the height of sides 30 and 32.

FIG. 3 illustrates the crib in a completely folded condition, and also illustrates legs 22 and 24 as folded underneath base 10. It is seen that the head and foot boards 16 and 18 protect the upper surface of the mattress as well as sides 30 and 32 when the head and foot boards are thus folded. The crib as illustrated in FIG. 3 is easily transportable from place to place, but may be quickly set up wherever desired.

It should also be noted that the appearance of the crib as illustrated in FIG. 1 is comparable to the usual appearance of a crib. That is, the sides 30 and 32 are high, providing optimum enclosure, even though these sides are easily accommodated when the crib is collapsed. Moreover, the sides 30 and 32 in their vertically secured positions extend below the top level of mattress 11. The proportions of the crib are in general the same as those found most advantageous in the usual non-portable crib. Furthermore, either side 30 or side 32 can be dropped, as hereinbefore described, so that ample access can be had to the crib mattress area.

While I have shown and described a preferred embodiment of my invention, it will be apparent to those skilled in the art that many changes and modifications may be made without departing from my invention in its broader aspects. I therefore intend the appended claims to cover all such changes and modifications as fall within the true spirit and scope of my invention.

I claim:

1. A crib comprising: a mattress supporting frame and legs attached to said frame proximate the ends thereof,

said frame including a base for receiving the mattress, facing base ends, and normally facing head and foot boards for said crib,

a side receivable between said head and foot boards and provided at its ends with longitudinally disposed tongue members near its four corners, a first pair of slotted brackets attached to said frame near lower ends of said head and foot boards for receiving tongue members attached to the said side near the lower corners thereof, said slotted brackets having vertical, downwardly opening slots receiving the last mentioned tongue members, and having upper stops, said slotted brackets being located directly opposite one another upon facing surfaces of base ends of the frame, a second pair of slotted brackets attached to said frame upon head and foot boards, respectively, directly above the first mentioned pair of slotted brackets and opposite one another upon the surfaces of the head and foot boards that normally face one another, the second pair of slotted brackets receiving the tongue members attached to said side near the upper corners thereof, the second pair of slotted brackets having vertical slots which open upwardly for receiving the last mentioned tongue members, and having stops at the lower ends of the last mentioned slots,

the first pair of slotted brackets being positioned such that with the tongue members proximate the lower corners of said sides against the upper stops of said first pair of slotted brackets the tongue members proximate the upper corners of said sides are above the upward opening of the slots of the second pair of slotted brackets so as to be receivable downwardly therewithin said head and foot boards being hingedly attached to the respective upper edges of said base ends for folding inwardly toward one another, the head and foot boards having a combined height less than the length of said crib when folded inwardly with said sides folded across said crib, said legs being secured to the under side of said frame and being foldable thereunder into a compact package.

2. The crib according to claim 1 wherein each of said slotted brackets is U-shaped in horizontal cross section and secured to a respective surface enclosing a normally vertical channel between said bracket and said surface, said bracket having a slot extending along the outer extremity of the U away from the said surface.

* * * * *