F. N. BUCKLAND.

LATH SUPPORT FOR TOBACCO STRIPPERS.

APPLICATION FILED OCT. 19, 1915.

1,198,522. Patented Sept. 19, 1916.

Fig. 1.

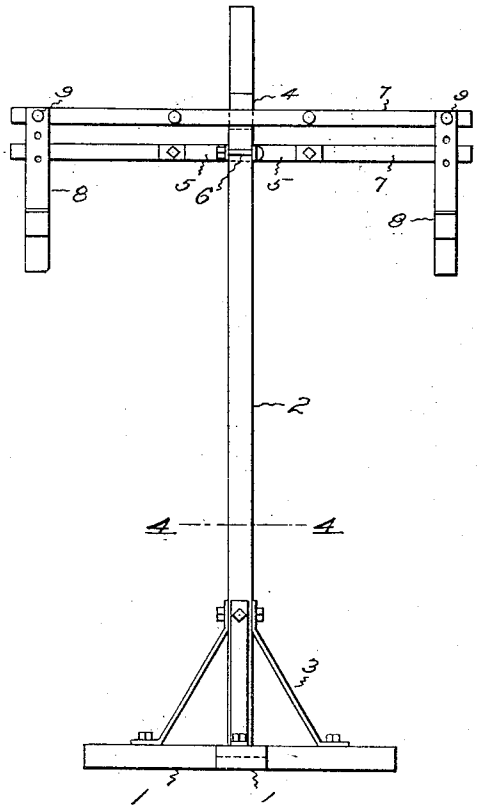

Fig. 2.

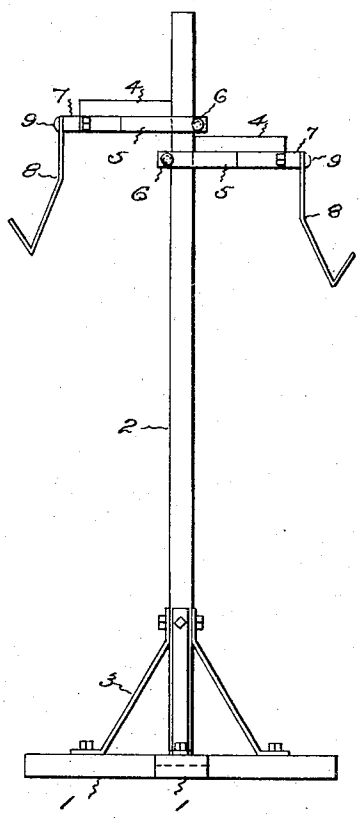

Fig. 4.

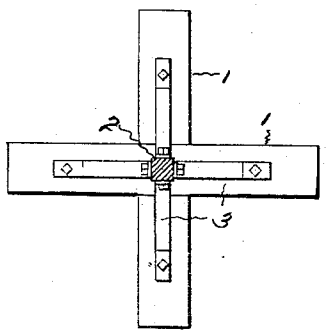

Fig. 3.

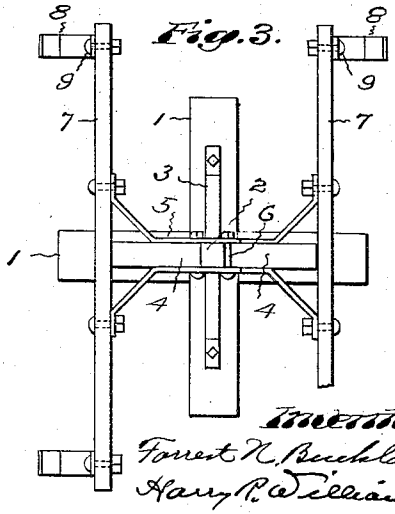

Inventor:
Forest N. Buckland
Harry R. Williams by
Atty.

THE NORRIS PETERS CO., PHOTO-LITHO., WASHINGTON, D. C.

UNITED STATES PATENT OFFICE.

FORREST N. BUCKLAND, OF MANCHESTER, CONNECTICUT.

LATH-SUPPORT FOR TOBACCO-STRIPPERS.

1,198,522. Specification of Letters Patent. Patented Sept. 19, 1916.

Application filed October 19, 1915. Serial No. 56,665.

To all whom it may concern:

Be it known that I, FORREST N. BUCKLAND, a citizen of the United States, residing at Manchester, in the county of Hartford and State of Connecticut, have invented a new and useful Improvement in Lath-Supports for Tobacco-Strippers, of which the following is a specification.

This invention relates to means for holding the lath upon which tobacco is hung while the leaves are being stripped from the stalks.

The object of the invention is to provide a cheap and compact portable stand with suitable hangers for supporting tobacco lath in such manner that several persons can conveniently, and under favorable conditions, work at the same time. To attain this end hangers for receiving lath are adjustably attached to the outer ends of cross arms which are secured to the outer ends of blocks that are freely adjustable up and down an upright post mounted on a suitable supporting base.

Figure 1 of the accompanying drawings shows a front elevation of the device. Fig. 2 shows a side elevation. Fig. 3 shows a plan, and Fig. 4 a section looking down on the plane indicated by the dotted line 4—4 on Fig. 1.

The base may be made of wood or iron, but preferably it is made as illustrated of two pieces of plank 1 crossed at right angles and halved together. The upright post 2, which may be made of wood or iron as most convenient, has its lower end fastened to the base, and this attachment is desirably strengthened by metal braces 3.

The inner ends of block 4 are held to the post by straps 5 and bolts 6 that pass through the ends of the straps on the opposite side of the post from the blocks which they are to hold. These parts are so fitted that the blocks may be moved up and down the posts when the outer ends of the blocks are lifted up, but they will bind on the post and retain the blocks at the level to which they are set as the result of a slight tilting down of the outer ends of the blocks and the bind of the bolts.

Fastened to the outer ends of the blocks are cross arms 7. The straps 5 may be extended and utilized as braces for strengthening the connection of the arms to the blocks. The hangers 8, which depend from the outer ends of the cross arms, are desirably made of strips of metal with their lower ends turned up so that they will receive and hold the ends of the lath. These hangers are secured by bolts 9 which pass through perforations in the ends of the hangers and through the arms. There may be several perforations through the hanger straps so that they may be adjusted up and down with relation to the arms.

This device may be set at any locality most convenient for the workers. A lath holding the tobacco stalks to be stripped of leaves may be quickly placed with its ends in the hangers on each side. Two persons are usually employed for stripping from each lath. The blocks with the cross arms and the hangers are adjusted up or down the post according to the height of the persons assigned to work on opposite sides, and should the persons at the opposite ends of the same lath be of different height the hangers can be arranged so that the lath will extend obliquely and thus hold the tobacco in the most convenient position to enable the strippers to work easily and rapidly.

The invention claimed is:

1. A tobacco lath holder comprising a base, an upright post thereon, a horizontally extending block or arm having a loose frictional connection at its inner end with said post, a horizontally disposed cross arm secured between its ends to the outer end of the first named block or arm, and hangers depending from the ends of the cross arm and terminating at their lower ends in upwardly opening lath engaging hooks; whereby the loaded laths will be supported away from the cross arm.

2. A tobacco lath holder comprising a base, an upright post thereon, a horizontally extending block or arm having a loose frictional connection at its inner end with said post, a horizontally disposed cross arm secured midway its ends to the outer end of said first named arm or block, and vertically adjustable hangers depending from the outer ends of the cross arm and terminating at their lower ends in upwardly opening lath supporting hooks whereby the loaded laths may be supported at an angle and away from the cross arm.

FORREST N. BUCKLAND.

Copies of this patent may be obtained for five cents each, by addressing the "Commissioner of Patents. Washington, D. C."