Feb. 15, 1927. 1,618,021

H. J. NENNO

DISTRIBUTING BLOCK

Original Filed Nov. 20, 1923

Fig. 1.

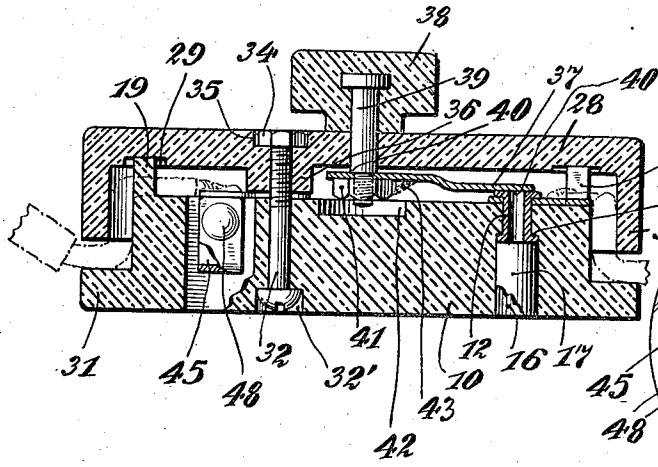

Fig. 2.

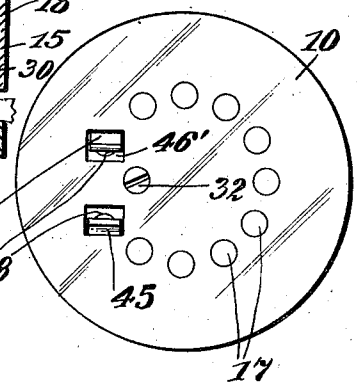

Fig. 4.

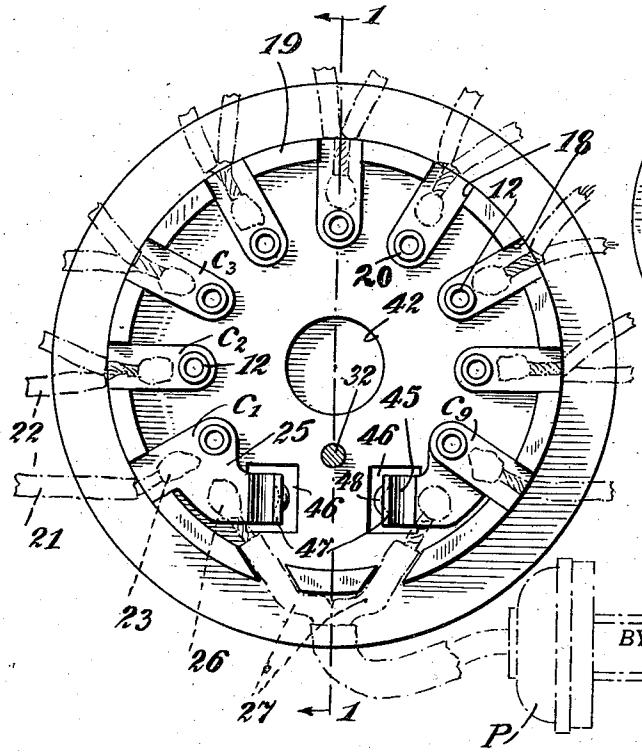

Fig. 3.

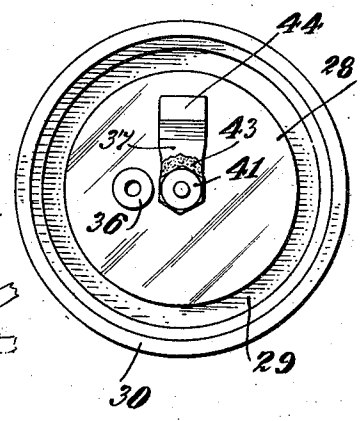

INVENTOR

Herbert J. Nenno

BY Dean, Fairbank, Albright & Hirsch.

ATTORNEYS

Patented Feb. 15, 1927. 1,618,021

UNITED STATES PATENT OFFICE.

HERBERT J. NENNO, OF ROCHESTER, NEW YORK.

DISTRIBUTING BLOCK.

Original application filed November 20, 1923, Serial No. 675,861. Divided and this application filed December 31, 1923. Serial No. 683,681.

My present invention relates to electrical distributing blocks and has a preferred application in relations in which a number of current consuming or translating devices are to be connected in series. The invention has a special application to low voltage, decorative lighting such as for Christmas trees, although it is not confined to such application, but may be used in numerous other relations, and may be embodied in constructions for apparatus of greater power consumption.

It is among the objects separately and collectively of the invention to provide a block of the type noted, with which the various lights or other current-consuming elements can be readily assembled individually, which will admit of easy connection of any number of said block assemblies across a single current-outlet, such as a wall socket, and which will facilitate the almost instant location of a defective lamp or other element of the group associated with any block, so that the group can be easily restored to operativeness without tedious improvised tests.

Another object is to provide a device of the type indicated, of simple and inexpensive construction, without delicate parts likely to become out of order and in which all of the electrical connecting contacts or live parts are protected in the interior against the possibility of accidental short-circuiting, or shocks to the operator.

A feature of the invention is the arrangement of a succession of terminals in protected relation in an insulating block, which is provided with outlets aligned with the terminals, so that conductors can be connected in series by said contacts. To each of the first and last of the terminals, a conductor is affixed, connected by a conventional push connector for placing the block in circuit.

According to another feature, the first and last terminals have each a contact, preferably in an integral structure therewith, at which the push connector plug of another block, which may be of identical construction, may be connected to be supplied in parallel from a block, in turn, connected at a wall socket or other outlet.

According to another feature, the block is provided with a switching or testing arrangement, operable manually from the exterior, and comprising a switch with a contact surface of width sufficient to bridge consecutive contacts in the block, so that in operation of the switch, the lamps or other current consuming devices, would be short-circuited in succession, only one at a time, whereby the instant a defective lamp of the group is short-circuited, the remaining lamps will glow, thereby locating the faulty one.

In a preferred application, the switch block is embodied in a circular construction, the contacts on the arc of a circle concentric therewith, the test switch operated by a rotary knob projecting from the cover, which encloses the switch and the contacts, the block base having outlet notches for conductors which are, moreover, positioned near their inner ends in a gap between the base block and the cover flange which is telescoped thereover.

The invention accordingly consists in the features of construction, combinations of elements and arrangement of parts, which will be exemplified in the construction hereinafter set forth, and the scope of the application of which will be indicated in the following claims.

In the accompanying drawings in which is shown one of various possible embodiments of the several features of the invention,

Fig. 1 is a view in longitudinal cross-section of the preferred form of switch block,

Fig. 2 is a bottom plan thereof,

Fig. 3 is a bottom plan of the cover, and,

Fig. 4 is a plan view of the switch block base, illustrating the electrical connection of the associated parts. This application is a division of my copending application, Serial No. 675,861, filed November 20, 1923.

Referring now to the drawings, I have shown a combined distributing and test block, comprising an insulating circular base member 10 having thereon a succession of nine terminals C′, C², C³, etc. The terminals in the preferred embodiment shown, comprise small generally rectangular blanks which may be of brass extending along radii of the base block, each secured thereto by a corresponding brass rivet 12, the locus of said rivets on a circle concentric with said block. As best indicated in Fig. 1, the rivet is applied through the lower face of the block with its lower head against the shoulder 15 determining the bore near the upper face of the block, within which the shank

of the rivet fits. Preferably, the bores 16 below the rivets are sealed as by friction-fitted plugs 17 which may, if desired, be of the same material as the block or of any other appropriate insulating material. The terminal blanks C are passed over the corresponding rivet shanks to protrude into corresponding notches 18 in a flange 19 on the block base, whereupon the rivet shanks are crimped over to form heads 20 for securing said terminal blanks in position. Between the pairs of contacts C′, C^2 are to be connected a pair of conductors 21 and 22 preferably by soldering thereto as at 23, the outer ends of said conductors to be connected to the terminals of a current-consuming element, such as a miniature lamp socket (not shown). Similar connections are made between each terminal and the succeeding one, two conductors being thus soldered to each of the intermediate terminal blanks C^2—C^8, and one to each of the first and last terminal blanks C′ and C^9, which latter are the main terminals. At lateral extensions 25 of said terminals C′ and C^9 are soldered as at 26, the supply leads 27 from any conventional form of electric plug P illustratively, a two-prong plug which may be applied at any wall socket, lamp socket or other electric outlet, in the decorative lighting application.

In the embodiment shown, a cover 28 is supported upon the upstanding flange 19 on the base block, which extends into a corresponding groove 29 in said cover. The cover is also provided with a flange 30 extending about the inner ends of the various conductors 22 and 23 that protrude through the notches 18 in the base block, said conductors extending from between a lateral flange 31 on the base block and the lower edge of the cover flange. As shown, the telescoping cover flange 30 is spaced sufficiently from the base wall to accommodate the conductors. The cover 28 may be secured to the base 10 by a screw 32 extending through the base, midway between terminal contacts C′ and C^9, and with its head countersunk as at 32′ at the bottom of the base and with a corresponding hexagonal nut 34 fitting in a corresponding hexagonal depression 35 in the upper surface of the cover.

The construction as thus far described, comprises a mounting block for connecting a number of current consuming devices, such as miniature electric lamps, in series. In the preferred embodiment shown, the first and last terminals C′ and C^9 are of special form and include integral lateral tongues 45 extending downward respectively into corresponding rectangular tunnels 46 through the base of the block, each having a reversely bent upward extending portion 47 with an embossment 48 thereon to provide an adequate spring contact for a conventional two-prong plug of the same type as that appearing at P. The plug P may thus be applied and removed without interference with the protruding conductors.

By the arrangement described, it will be seen that any number of the blocks described, each provided with a two-prong plug as shown in Fig. 4, may be connected in circuit across a single wall outlet or other source of current, the plug for each block being applied at plug terminals 45 of another block, and the plug P of the final block being connected to the wall switch or socket. Thus, by the use of any number of blocks of the identical construction shown, a corresponding multiple of eight miniature electric lamps may be supplied from a single wall outlet. The eight lamps connected at each block are thus connected in series across the line, the various blocks with their lamps being connected in parallel.

Of course, the block may be provided with more or less than the number of contacts shown for connecting in series, a greater or lesser number than eight lamps or other current consuming devices of appropriate voltage.

In the preferred embodiment, the block is provided with special means by which a defective one of the multiplicity of series-connected lamps or other devices mounted thereby, can be located almost instantly. For this purpose, I provide a manually operated switch, the contact surface of which will bridge across the gaps consecutively between the rivet contacts 12 of the terminals C, as the switch is operated, thereby successively short-circuiting the lamps or other devices, rendering the other lamps or current consuming devices operative, the instant the defective one is short-circuited by the switch arm.

In the preferred embodiment, the cover is molded with an integral hub 36 at the lower surface thereof to provide a greater length of bearing surface for the screw 32 and to serve as a stop for the switch arm 37. Switch arm 37 which may be a blank of brass is pivotally mounted at the center of the cover and is of sufficient width to bridge consecutive rivet heads 12 as it is rotated. For operating the switch arm, the insulating knob 38 is provided on the cover and is rigidly connected to the switch arm by a bolt pin 39 molded in the knob and extending axially through the cover. The switch arm 37 is clamped against a shoulder 40 on pin 39 by a nut 41 threaded onto the lower end of said pin. Clearance 42 is provided for said nut in the base 12, and the nut pin 39 and switch arm 37 are preferably soldered together at 43 to maintain the rigidity of the assembly, so that the switch arm 37 will turn in unison with the knob 38. The switch arm is preferably sprung as at 44

to provide a spring contact on the successive rivet heads 12 as the knob is rotated in the process of short-circuiting any one of the series-connected apparatus in the decorative lighting application, for locating a defective lamp.

It will be understood, of course, that with the defective lamp short-circuited, the remaining lamps may be kept in service. Preferably, however, the defective or dark lamp located by the operation of the switch, would be replaced by an operative one and the switch returned to its extreme position against lug 36 to place the complete set in circuit, thereby avoiding over-voltage on the lamps or other units.

It will be seen that the distributing and switch block is of particularly simple and durable construction, without delicate exposed parts that are likely to be deranged. It is also seen that the main terminals and the various terminal plates and switch contact rivets as well as the switch blade are protected within the block against any possibility of short-circuit, or shock to the person operating the block, and that the circuitous courses or gaps provided for exit of the conductors soldered or otherwise secured to the terminal plates serve to position said conductors against shifting without exposing any of the live parts in the block unit. Operation of the switch, it is also seen, does not result in any abrasion of the conductors, the insulation on which will not be rubbed off as it might if the switch operating parts rubbed against or were likely to rub against the conductors or any of them in use.

It will thus be seen that there is herein described apparatus in which the several features of this invention are embodied, and which apparatus in its action attains the various objects of the invention and is well suited to meet the requirements of practical use.

As many changes could be made in the above construction and many apparently widely different embodiments of this invention could be made without departing from the scope thereof, it is intended that all matter contained in the above description or shown in the accompanying drawings shall be interpreted as illustrative and not in a limiting sense.

Having thus described my invention, what I claim as new and desire to secure by Letters-Patent of the United States is:—

1. An electrical distributing block unit comprising a base having a plurality of electrical terminals fixed thereon and insulated from the back of said base, a cover enclosing said terminals to protect the same, said unit having outlet passages between said base and said cover for electrical conductors to be affixed to the respective terminals, and means retaining said cover and base in assembled relation and serving to locate the conductors in the assembled and installed device.

2. In an electrical distributing block, in combination, an insulating base having a plurality of terminals in fixed relation thereon and insulated from the back thereof, a cover enclosing and protecting said terminals, said cover having a lateral wall extending over the lateral wall of said base in spaced relation with respect thereto for exit of conductors to be connected to the various terminals, said block having main terminals through which current may be supplied in series to and through the various conductors.

3. An electrical distributing block comprising in combination, a circular insulating base, terminals mounted in the arc of a circle at one face thereof, an insulating cover having a flange telescoped over the lateral wall of said base and protecting said terminals, said base having an upstanding flange sustaining said cover, said flange having notches aligned with said terminals, and said cover flange being spaced from the cylindrical wall of said block to provide outlets for conductors to be affixed to the contacts and to protrude through said notches, said unit having main terminals between which the conductors are connected in series circuit.

4. An electrical distributing block unit comprising in combination, complementary base and cover members of insulating material, electrical terminals fixed in said base and protected by said cover, outlets in said unit for electrical conductors to be attached to the various terminals, the first and the last of said terminals having integral terminal conformations exposed from the back of the base for application of an electrical terminal plug through which the conductors and current consuming devices at the ends of the latter may be connected in series circuit relation.

5. The combination set forth in claim 4 in which the base and cover are provided with tunnel outlets therebetween through which the conductors may extend for protrusion from the side of the block and by which they are retained against shifting.

6. An electrical distributing block comprising, in combination, a circular base member, a plurality of terminals affixed thereto in a concentric arc, the first and the last of said contacts having each an integral terminal conformation extending downward into corresponding holes through said block for application from the back of said block of an electrical terminal plug, and a cover closing said block and protecting said terminals.

7. The combination set forth in claim 6 in which the cover is sustained upon an integral flange on the base having notches radi-

ally aligned with the terminals for exit of conductors to be secured to the terminals and in which the cover has a flange telescoped over the base in spaced relation with respect thereto for exit of said conductors.

8. A switch block comprising a circular base, a succession of contacts thereon arranged concentrically of the block, an integral upstanding flange on said block having notches therein for exit of conductors connected to said contacts, a cover secured to said block and having a flange covering the inner ends of said conductors, so that the latter protrude from between the base of said block and the edge of said flange, and a switch mounted in said cover and having an operating knob for successively bridging between consecutive contacts.

9. A circular block having a plurality of contacts affixed to the upper surface thereof in a concentric circular arc, a cover affixed to said base and having a flange telescoped thereover, outlets between said cover and said base for electrical conductors connected to the various contacts, a switch member having a pivot mount in said cover and having an exposed operating handle, said switch member having a contacting surface of width sufficient to bridge between two consecutive contacts, whereby in switch operation, the current consuming elements connected between the consecutive contacts will be consecutively short-circuited.

10. A combined distributing and test block comprising a circular base, a plurality of contacts affixed thereon at uniform intervals, on an arc concentric with said base, said base having an upstanding flange, a cover sustained upon said flange, a bolt through said base and said cover connecting the parts in assembled relation, terminal plates rigid with said contacts and extending into corresponding notches in said flange through which conductors secured thereto may protrude to the exterior of the block, said cover having a telescoping flange in spaced relation with respect to the base for exit of said conductors, a switch blade concentric with said base and having a pivot mount in said cover and having an operating contact surface of width to bridge between two and only two consecutive contacts, and an operating knob for said blade at the exterior of said cover.

11. The combination set forth in claim 10 in which the first and last of the contacts is formed with an integral terminal conformation protruding downward into corresponding tunnels through said block for application of an electrical terminal plug through the back of said block for effecting circuit connection.

12. An electrical contact block comprising a base of insulating material, terminal plates thereon, contact rivet members, through corresponding apertures in said base and securing said plates in position, and insulating plugs filling the apertures through said base back of the rivets.

13. An electrical switch block comprising a circular base having an upstanding peripheral flange, terminal plates resting on said base and extending radially into corresponding notches in said flange, contact rivet members fixed in said base and insulating plugs filling apertures in said base back of said rivets through which the latter are applied, said rivets extending through corresponding apertures in the terminal plates and having heads clamping the plates in fixed position, and a rotary switch blade having said heads in the path of displacement thereof.

Signed at Rochester, in the county of Monroe and State of New York, this 24th day of December A. D. 1923.

HERBERT J. NENNO.