United States Patent [19]

Young

[11] **3,814,181**

[45] **June 4, 1974**

[54] **AMBIENT PRESSURE RESPONSIVE SAFETY VALVE**

[75] Inventor: **David E. Young,** Friendswood, Tex.

[73] Assignee: **Schlumberger Technology Corporation,** New York, N.Y.

[22] Filed: **Dec. 29, 1972**

[21] Appl. No.: **319,183**

[52] **U.S. Cl.** ..... **166/224 S,** 137/484.6, 137/494

[51] **Int. Cl.** **E21b 43/12**

[58] **Field of Search** ... 166/224 S; 137/484.2, 484.6, 137/484.8, 494, 505

[56] **References Cited**

UNITED STATES PATENTS

3,045,759	7/1962	Garrett et al.	166/224 S
3,050,132	8/1962	Page	166/224 S
3,065,794	11/1962	Page	166/224 S

Primary Examiner—James A. Leppink

Attorney, Agent, or Firm—David L. Moseley; Stewart F. Moore; William R. Sherman

[57] **ABSTRACT**

A safety valve apparatus for wells producing well fluid by formation pressure and including a valve mechanism that is normally maintained in the open or flowing position by an urging means and is closed responsive to a predetermined differential pressure developed between flowing pressure, within the valve apparatus and ambient pressure, externally of the valve apparatus. A predetermined differential pressure develops a force overcoming the bias of the urging means and moves the valve mechanism to the closed position thereof. The valve apparatus is provided with means for modifying the effective size of the inlet orifice of the valve mechanism responsive to a predetermined decrease in ambient pressure from a normal operating range, thereby developing the predetermined pressure differential for achieving automatic closure of the safety valve apparatus.

19 Claims, 8 Drawing Figures

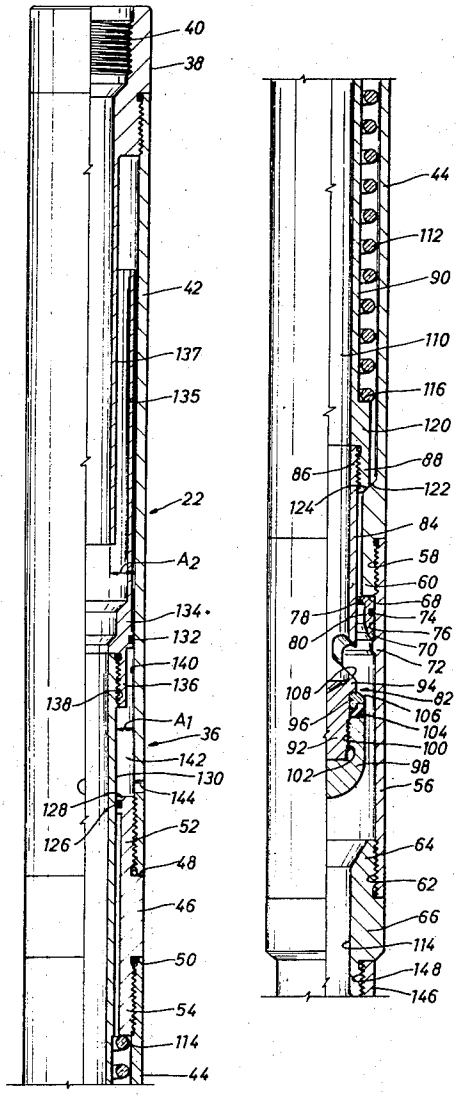

FIG. 1

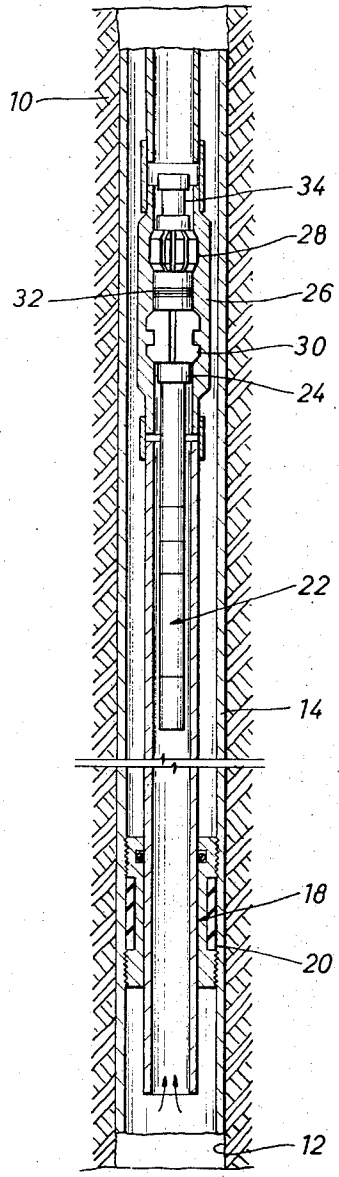

FIG. 2A

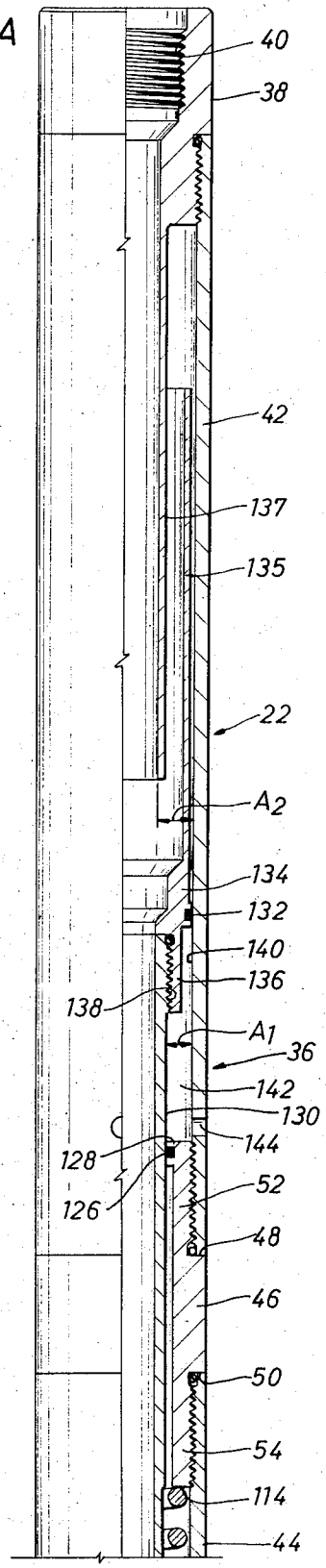

FIG. 2B

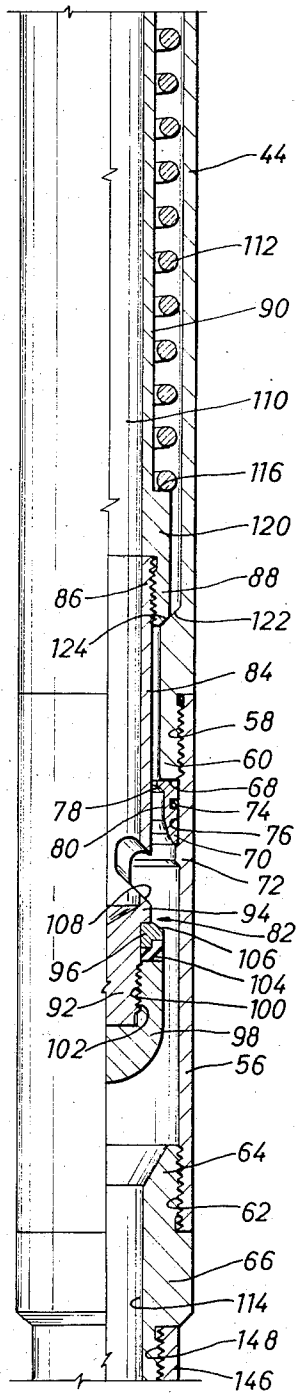

FIG. 2C

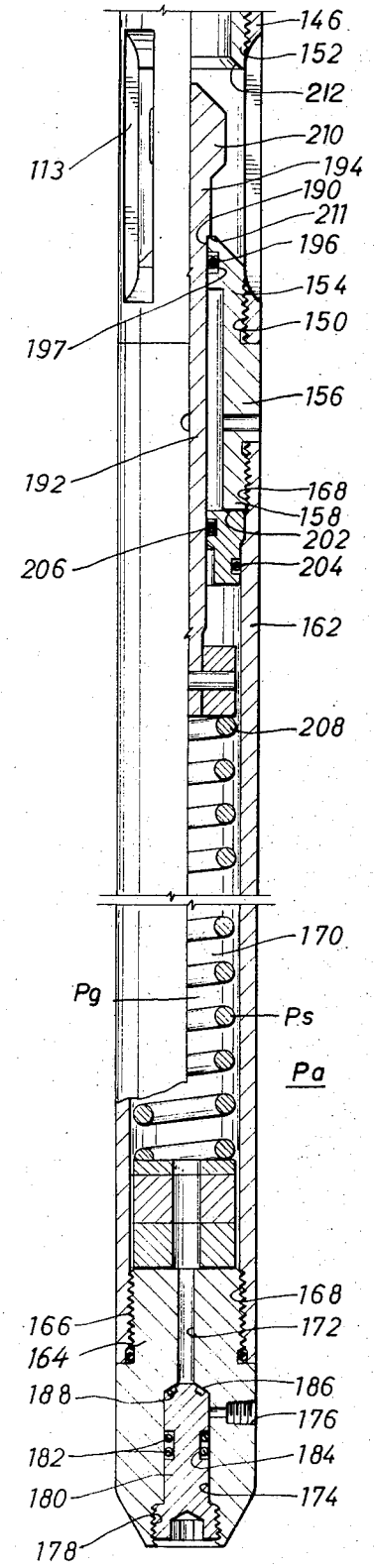

FIG. 3A

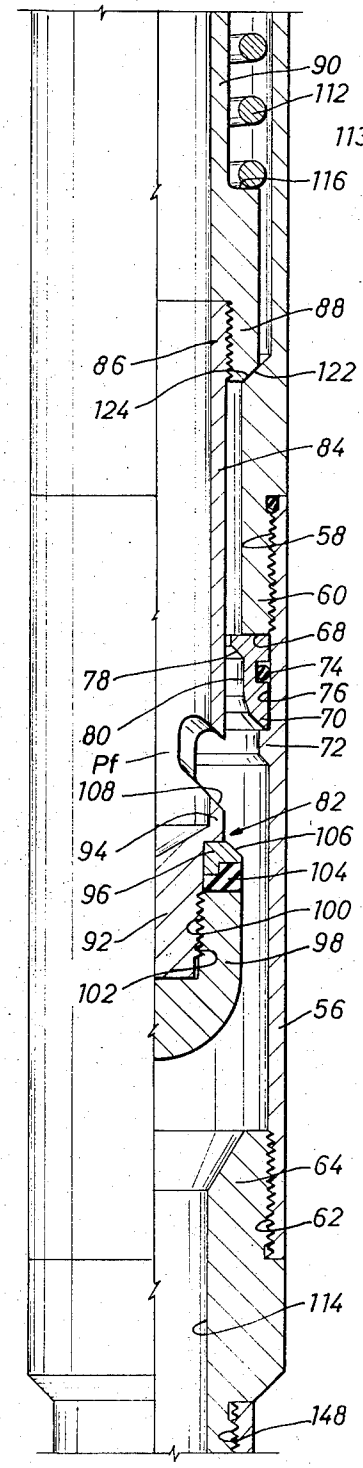

FIG. 3B

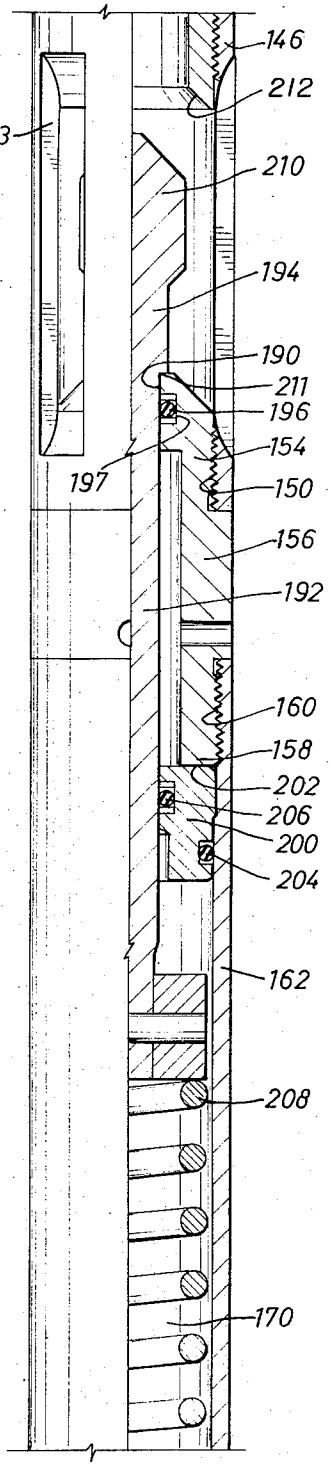

FIG. 4A

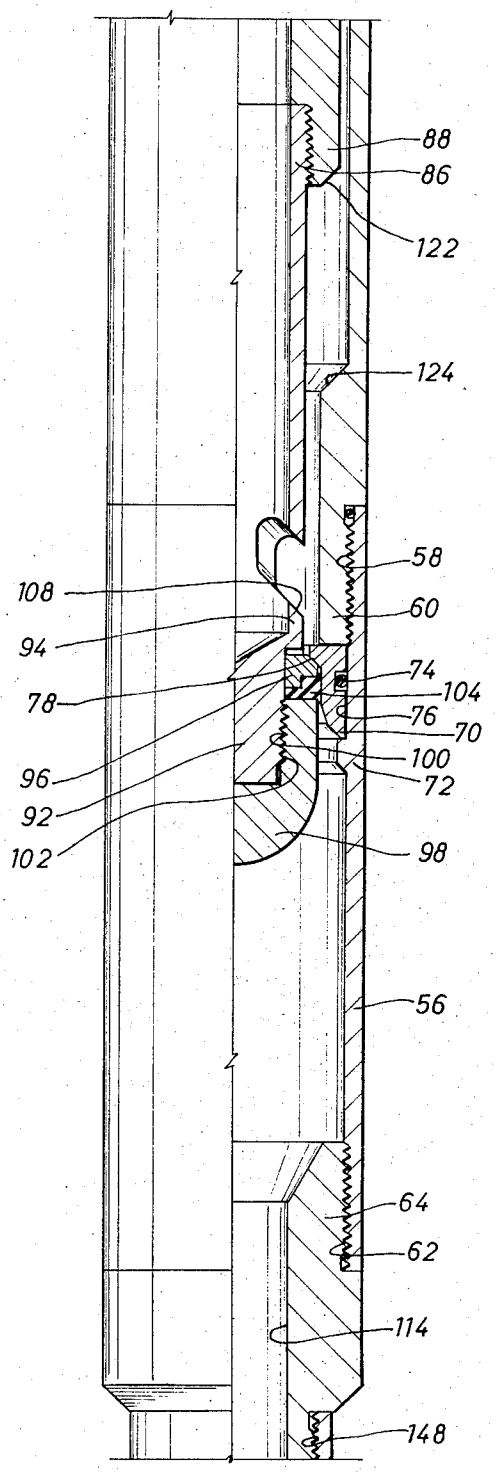
88
86
122
124
58
60
108
94
78
74
104
76
70
96
100
72
92
102
98
56
64
62
114
148

FIG. 4B

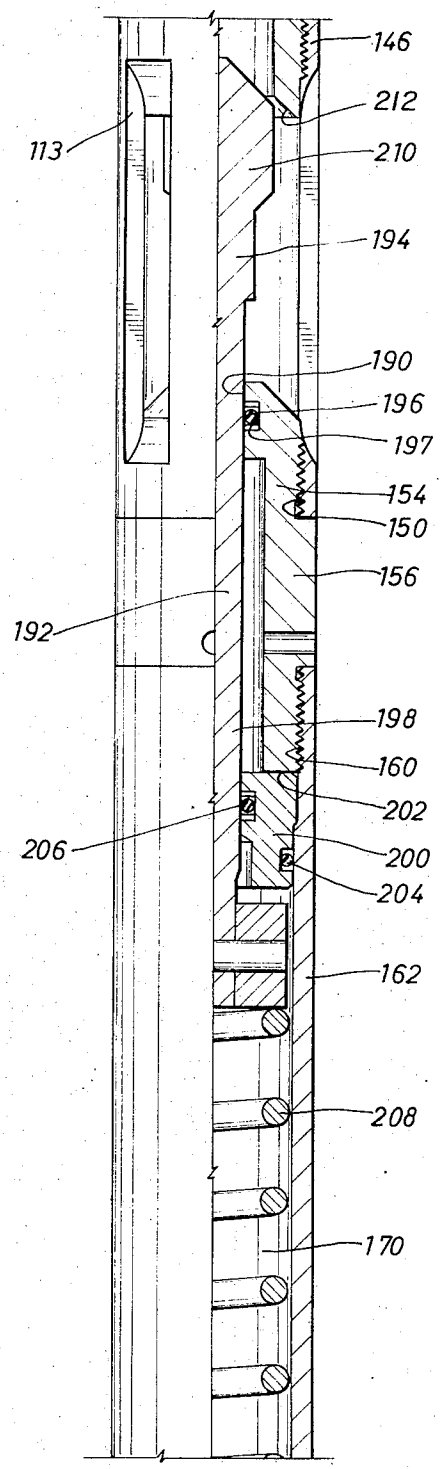
146
212
113
210
194
190
196
197
154
150
156
192
198
160
202
206
200
204
162
208
170

AMBIENT PRESSURE RESPONSIVE SAFETY VALVE

FIELD OF THE INVENTION

This invention relates generally to safety valve apparatus for downhole environment in wells having a formation pressure for producing well fluid, and more specifically concerns the provision of a safety valve apparatus adapted for positive closure of a safety valve mechanism in the event ambient pressure at the level of the safety valve should decrease below a predetermined minimum.

BACKGROUND OF THE INVENTION

In the early stages of development of the petroleum industry it was typically the practice to tap a pressurized source or reservoir of petroleum products by drilling and to allow any gas pressure that might be contained therein to dissipate to a controllable level or to a level at which the petroleum products might be recovered by pumping. The gas during this particular period was substantially unusable and was generally wasted. Where oil was blown from the well along with the escaping gas, it was the practice to collect the oil in surface ditches constructed about the well site. As the petroleum industry rapidly developed, it was discovered that the pressurized gas within production formations could be efficiently utilized to produce other petroleum products contained therein and the gas itself could be efficiently marketed in its natural state or in other physical states, such as the liquid state, for example. Various developments have been made to ensure against the loss of gas pressure within petroleum reservoirs, but most of the early developments were related to surface control valves and the like that might be manipulated manually or mechanically for flow control purposes.

Although wells may now be effectively controlled to prevent unnecessary escape of gas from the reservoir, occasionally an unforeseen circumstance will develop that may cause a well to blow wild. Surface production control equipment may be damaged by mechanical apparatus operating in the vicinity of the well site and the surface equipment of the well may be otherwise subject to various hazards of the surface environment that could result in blow-out of the well.

When the well is being produced through an offshore facility such as a production platform, the occurrence of an explosion or fire and the like is extremely hazardous to lives of personnel because of the difficulty of escape from the production facility. Offshore explosions and fires are also extremely expensive from a property damage standpoint because of the extremely expensive nature of offshore production facilities. Moreover, an oil spill that might be caused by damage to surface production flow control equipment, located on an offshore production facility, may result in pollution of an extremely large area of the shoreline thereby resulting in extensive damage to wildlife sanctuaries and the like.

Explosions, both at surface flow control equipment and within the well bore below the surface equipment, may result in sufficient damage to allow a particular well to blow wild.

Wells may also blow-out due to shifting of earth stratum through which the well bore passes and likewise, may blow-out due to insufficient structural interconnection between well cement within the well bore and the earth stratum through which the well bore passes, thereby allowing pressurized production fluid to flow around the exterior of the well casing to the surface.

When a well blows wild for any reason whatever, the expense thereof to well drilling and producing companies can be extremely great. Such expense may be caused by loss of production during the time the well is blowing wild and due to the loss of field reservoir pressure which may prevent future production of petroleum products in situ. Loss of reservoir pressure may also substantially slow the production of petroleum products or may make the production of such products extremely expensive by requiring gas lifting operations and secondary recovery operations for effective production.

It is obviously necessary to provide subsurface production flow control mechanisms that may be controllable automatically or selectively as desired to prevent well blow-outs even though surface flow control equipment may be damaged or rendered inoperative. Subsurface production flow control apparatus of this nature may be capable of preventing explosion and fires that otherwise might occur in the event of damage or malfunction that surface flow control systems. Moreover, subsurface flow control safety equipment may effectively prevent the pollution of the surface environment tha might otherwise occur if an offshore well is allowed to blow wild. Since subsurface safety valve mechanisms may effectively present a great majority of well blow-outs and since pollution control is so extremely important from the standpoint of conservation, it is obvious that subsurface safety mechanisms are necessary to efficient functioning of the petroleum industry.

THE PRIOR ART

Various well safety systems have been developed, involving both surface and subsurface safety equipment, that may be actuated to a safe position in response to the development of an adverse well condition, to stop the flow of production fluid, until the production equipment may be made safe for further operation. Actuation of safety valves may be automatically controlled by pilot mechanisms, responsive to remote sensing, or in the alternative, safety valves may be actuated to the safe position by a force developed responsive to an adverse well condition. Offshore wells may include production equipment provided with a "safe-mode" that may allow production of the well or may cause the well to shut in the event of storms or other hazardous conditions that might otherwise adversely affect production operations.

Surface and subsurface safety valve equipment may be developed that effectively achieves shut-in of surface or subsurface production flow control equipment to terminate the flow of production fluid in the event excessive well pressures should develop and in the event the flow control equipment may be subjected to excessive flow of production fluid. For the most part, presently available downhole safety valve equipment is solely velocity sensitive and remains open to allow the flow of production fluid during periods of normal or low velocity flow. Such valves are typically actuated by forces developed during high velocity flow to move the valve structure to the closed position and stop the flow of production fluid.

Where a well is being produced and a failure occurs in the production system of the well, it is desirable that the well shut in automatically. One typical device for serving this purpose is a so-called velocity sensitive valve that includes a spring operator piston which is sealingly slidable within a housing and carries a flow restriction, typically referred to as a flow bean, through which the flowing well fluid passes. The pressure drop across the restriction of the flow bean acts on an area defined generally by the piston seal diameter and the bore diameter of the flow restriction to produce an upward resultant force that is related to the flow rate or velocity. When the flow rate increases to a value sufficient to compress the spring by a predetermined amount, the valve closes to shut off the flow.

One of the more commonly employed valve elements is a poppet valve device that includes an enlarged head around which the flowing fluid passes immediately before it flows through lateral ports in the valve actuator sleeve. In the closed position, the head engages an annular valve seat with a metal-to-metal seal. This type of closure presents a number of difficulties, however. It is likely to leak where there are small manufacturing imperfections in the respective seal surfaces. Abrasives such as sand grains in the well fluids, scale and the like, tends to erode away the metal seat and cause a tiny leak which, in very short order, may be enlarged by cavitation and result in the failure of the valve. Moreover, if the valve element does not move directly into a tight sealing position and is allowed to oscillate or to develop a throttling function for any period of time before closing, the throttling condition will likely result in cavitation of the sealing parts, thereby rendering the valve inoperative.

Another commonly employed valve system utilizes a vall valve element, where closure is effected by metal-to-metal contact between the ball and a companion seat or by a bonded seal ring that seats against the metal surface of the ball. A condition of throttling can occur if the valve ball is not moved directly and firmly to its fully closed position upon immediate sensing of the adverse well condition.

If a leak should occur in the surface flow equipment of the well, and if the leak is initially small and increases due to erosion or cavitation of the flow control equipment, the differential pressure condition that causes automatic closure in a velocity sensitive well safety system may cause a throttling condition to occur and, therefore, may cause cavitation of the safety valve mechanism, rendering the safety valve inoperable. It is, therefore, a primary object of the present invention to provide a novel safety valve mechanism that is capable of closure responsive to a predetermined pressure differential but is not subject to erosion by well fluid due to the development of a throttling condition.

It is an even further object of the present invention to provide a novel safety valve mechanism capable of moving directly and efficiently into closed position responsive to the sensing of an adverse well condition that might otherwise develop excessive flow in a well production system.

Among the several objects of the present invention is noted the contemplation of a novel downhole safety valve mechanism for a well that is responsive to a predetermined decrease in ambient pressure in a well bore externally of a safety valve mechanism for developing a pressure drop that causes closure of the safety valve.

It is an even further object of the present invention to provide a novel safety valve mechanism for a downhole well environment including means, separate from the valve mechanism, that functions to develop a pressure drop that causes closure of the valve element.

It is another object of the present invention to provide a novel safety valve mechanism for a downhole well environment that includes a valve mechanism that is not subjected to a condition of pressure differential that functions directly to achieve closure of the valve assembly.

Another important object of the present invention contemplates the provision of a novel safety valve mechanism that may be reopened simply by injection of sufficient pressure into the tubing string to balance the forces maintaining the closed valve assembly in its closed condition.

This invention also contemplates the provision of a novel downhole safety valve mechanism that is of inexpensive nature, is reliable in use and low in cost.

Other and further objects, advantages and features of the present invention will become apparent to one skilled in the art upon consideration of the written specification, the attached claims and the annexed drawings. The form of the invention, which will now be described in detail, illustrates the general principles of the invention, but it is to be understood that this detailed description is not to be taken as limiting the scope of the present invention.

BRIEF SUMMARY OF THE INVENTION

A downhole safety valve mechanism, according to the present invention, may include a housing structure adapted for connection to a production tubing within a well system within which housing may be disposed a safety valve assembly capable of terminating the flow of production fluid responsive to the development of an adverse pressure condition within the well. A valve seat may be provided within the housing against which may be seated a valve element that is movable between open and closed positions relative to the seat. The valve element may be connected to an actuating sleeve movably disposed within the housing and urged to the open position thereof by a spring element to allow flow of fluid through the valve mechanism. The movable sleeve may constitute a piston against which a force is developed by differential pressure to cause closure of the valve element, the pressure differential being defined by the difference in flowing pressure within a flow passage defined in the sleeve and ambient pressure within the well bore externally of the safety valve mechanism.

Sufficient pressure differential may be developed to cause automatic closure of the safety valve mechanism responsive to a predetermined decrease in ambient pressure that causes a movable element to modify the effective size of the inlet opening of the valve mechanism in direct proportion to the amount of decrease in ambient pressure. A plunger, carried by a pressure dome portion of the valve housing, and movable responsive to pressure differential developed between ambient pressure and pressure within a variable volume gas charged chamber, functions to restrict the effective size of the inlet opening of the valve if excessive flow of production fluid through the valve structure, which

might be caused by failure of surface equipment, decreases ambient pressure within the well bore below a predetermined minimum operating level. The plunger causes a pressure differential to occur at the inlet opening of the valve assembly to which pressure differential, the actuating sleeve is responsive to move the valve element to the closed condition thereof. An urging means such as a compression spring may be utilized to assist movement of the plunger element toward a position restricting the effective size of the inlet opening.

BRIEF DESCRIPTION OF THE DRAWINGS

So that the manner in which the above recited features, advantages and objects of the present invention, as well as others, which will become apparent, are attained and can be understood in detail, more particular description of the invention, briefly summarized above, may be had be reference to the embodiment thereof which is illustrated in the appended drawings, which drawings form a part of this specification.

It is to be noted, however, that the appended drawings illustrate only a typical embodiment of the invention and are therefore not to be considered limiting of its scope, for the invention may admit to other equally effective embodiments. In the drawings:

FIG. 1 is a pictorial representation, illustrated partially in section, of a subsurface earth formation having a well bore extended therethrough and being lined with a well casing enclosing a production tubing, to which production tubing is attached a downhole safety valve mechanism constructed in accordance with the present invention.

FIGS. 2A, 2B and 2C are longitudinal sectional views forming the upper intermediate and lower portions, respectively, of a safety valve mechanism constructed in accordance with the present invention.

FIG. 3A is an enlarged cross-sectional view of the valve seal assembly of the safety valve mechanism of the present invention.

FIG. 3B is an enlarged cross-sectional view of an ambient pressure responsive valve inlet opening controller constructed in accordance with the present invention.

FIG. 4A is a cross-sectional view of the valve seal assembly and valve inlet opening controlling mechanism of the present invention showing the parts thereof in the open or normal operating position.

FIG. 4B is a cross-sectional view of the valve seal and valve inlet opening controlling mechanism of this invention, illustrating the movable parts thereof in the closed position which occurs responsive to predetermined decrease in ambient pressure.

DESCRIPTION OF THE PREFERRED EMBODIMENT

Now referring to the drawings and first to FIG. 1, an earth formation is illustrated generally at **10** having a well bore **12** drilled therein which bore is lined with a well conduit **14** that may be cemented in place in conventional manner and traverses the earth formation being produced. A production string of tubing **16** extends from the surface downwardly through a typical production packer **18** having a packing element **20** that seals off the production interval from the well casing thereabove. Well fluid enters the casing **14** through perforations (not shown) disposed below the packer **18** and passes upwardly through the tubing string **16.**

At a suitable downhole location in the tubing string, usually above the packer **18,** a safety valve **22,** constructed in accordance with the present invention, is shown to be attached to the lower extremity of a conventional wire line setting a retrieving mandrel **24** that is seated in a landing nipple **26.** The retrieving mandrel **24** is provided with locking dogs **28** and locator keys **30,** disposed on either side of seal packing rings **32,** and the upper extremity of the mandrel **24** is provided with a running and retrieving neck **34.** The details of construction of the setting mandrel assembly, as well as the procedures for running and retrieving the assembly on wire line, are well known to those skilled in the art and form no part of the present invention.

With reference now to FIGS. 2A, 2B and 2C, which depict the upper, intermediate and lower portions, respectively, of the safety valve, generally illustrated at **22,** a valve housing, generally illustrated at **36,** may comprise an upper sub **38** having an internally threaded upper extremity **40** for establishing threaded connection with the lower extremity of the setting mandrel **24.**

The housing **36** may be defined by separate upper and lower sections **42** and **44,** respectively, that are joined by a coupling **46** having an intermediate thickened wall section defining abutments **48** and **50** for engagement by the upper and lower housing sections **42** and **44** respectively. The coupling **46** may be also provided with upper and lower externally threaded portions **52** and **54,** respectively, adapted to receive the internal threads of the upper and lower housing sections.

The housing **36** of the safety valve may also be provided with a valve section **56,** provided with internal threads **58** at the upper extremity thereof for threaded connection to a lower externally threaded portion **60** of the lower housing section **44.** The valve section may also be provided with internal threads **62** at the lower extremity thereof for connection to the upper externally threaded portion **64** of a support coupling **66.** The lower extremity of the lower housing section **44** may define an annular abutment **68** providing support for a seat element **70** that is retained in engagement with the abutment surface **68** by an annular seat support flange **72** defined within the valve section **56** of the housing. The seat element **70** may be provided with a sealing element **74,** such as an O-ring or the like, retained within a circumferential groove for establishment for a sealed relationship between the seat element **70** and the internal wall **76** of the seal pocket defined between the abutment shoulder **68** and the internal flange **72.** The seat ring **70** presents an inclined stop surface **78** located just above an inwardly facing seal surface **80.**

A valve element, illustrated generally at **82,** may be disposed for reciprocation within the valve section **56** of the housing and may include a tubular portion **84** provided with an upper threaded extremity **86** for threaded connection to a lower internally threaded portion **88** of a valve actuating sleeve element **90,** also disposed for reciprocation within the housing **36.** The tubular portion **84** of the valve element may be provided with a closed lower extremity **92** which may be stepped down to define an annular abutment portion **94** providing support for an annular seal retainer ring **96.** A seal support end cap **98** may be provided with internal threads **100** for threaded connection with external threads **102** of the valve element, and together with

the retainer ring **96** may serve to retain an annular sealing element **104** that may be compressed to some degree by the retainer ring or compression ring **96** to increase the degree of sealing engagement between the sealing element **104** and the seal surface **80**, when the valve element is in its closed position.

As the valve element **82** is moved upwardly to its closed position, the outer periphery of the sealing element **104** will slide into sealing engagement with the generally cylindrical sealing surface **80** of the seal element **70** and a tapered surface **106** of the compression ring **96** will move into abutment with the tapered surface **78** of the seat element. As the valve element **82** is urged by pressure differential in an upwardly direction, the compression ring **96** will be forced away from the abutment portion **94** and will deform the sealing element **104**, thereby causing the sealing element to increase the pressure of its sealing contact with the annular sealing surface **80**. The sealing ability of the valve is therefore increased directly proportional to increase in pressure differential across the closed valve.

In the open position of the valve element **82**, as shown in FIG. 2B, fluid being produced through the safety valve mechanism will flow around the lower extremity of the valve element and will enter the tubular portion **84** through at least one and preferably a plurality of apertures **108**. The production fluid will then continue upwardly through a flow passage **110** defined by cooperating tubular portions of the valve element and valve actuating sleeve and into the tubing string to which the safety valve mechanism is connected by the upper sub **38**.

It will be desirable to provide a mechanism for retaining the valve element **82** in the open or FIG. 2B position thereof as long as ambient pressure within the well casing and externally of the safety valve mechanism is within a proper operating range and to achieve closure of the valve element to stop the flow of production fluid in the event ambient pressure should fall below a predetermined minimum level for any reason whatever. Means for achieving pressure responsive control on the valve element **82** may conveniently take the form illustrated in FIG. 2A where an urging means, such as a compression spring **112** may be interposed between abutment shoulders **114** and **116** defined respectively by the lower extremities of the coupling **46** and by a thickened wall portion **120** of the valve actuating sleeve element **90**. The compression spring **112**, under normal conditions, will urge the valve actuating sleeve element **90** downwardly until an annular tapered shoulder **122**, defined thereon, moves into abutment with a tapered support shoulder **124**, defined internally of the lower housing section **44** where further downward movement of the valve element **82** will be restrained by the stop surface **124**.

It will be necessary to develop a force, acting upwardly on the valve actuating sleeve **90**, that is capable of overcoming the bias of the compression spring **112** in order to cause upward movement of the actuating sleeve to a position moving the valve element to its closed position. In accordance with the present invention, an annular sealing element **126** may be retained within an annular groove defined within an inwardly projecting portion **128** of the coupling element **46**, which sealing element may establish sealing contact with a generally cylindrical sealing surface **130** defined on the valve actuating sleeve **90**. A second annular sealing element **32** may be retained within an annular groove defined in a piston element **134** having a lower internally threaded extremity **136** receiving external threads **138** defined at the upper extremity of the sleeve element **90**. The sealing element **132** may be disposed in sealing engagement with an internal sealing surface **140** defined within the upper housing section **42**. The piston element **134**, together with the sleeve **90** and sealing element **132**, cooperate with the upper housing section **42**, the coupling element **46** and sealing element **126** to define a valve actuating chamber **142** that is communicated with ambient pressure by at least one and preferably a plurality of orifices **144** formed in the upper housing section **42**. Above the piston element **134** may be provided a thin walled sleeve **135** cooperating with a sleeve **137** depending from the upper sub **38** to define a barrier for sand and other abrasive matter produced along with the well fluid. The sleeves **135** and **137** define a dead space therebetween that prevents sand from accumulating above the O-ring seal **132**, thereby protecting the seal from abrasive wear.

Ambient pressure, communicated through orifices **144** into the annular valve actuating chamber **142**, will act upon a surface area of the valve actuating sleeve element **90** defined by the piston element **134**, and referred to as area A1, while fluid pressure within the valve housing downstream of the valve element, also referred to as flowing pressure, acts upon a surface area of the valve actuating sleeve referred to as A2. Under normal operating conditions ambient pressure acting upwardly upon the sleeve **90** will be slightly overbalanced by flowing pressure acting downwardly upon the sleeve and the net downward pressure responsive force will be added to the downward force developed by the compression spring **112**, thereby maintaining the sleeve, and the valve element connected thereto, in the lowermost or open position thereof. If, for some reason, the pressure of the flowing fluid within the valve mechanism should decrease substantially relative to ambient pressure externally of the safety valve, the differential pressure acting upon the sleeve **90** will be such that a resultant force of substantial magnitude will be developed acting upwardly upon the sleeve **90** through the piston element **134** that overcomes the compression of spring **112** and urges the valve actuating sleeve **90** to the upper position thereof, thereby causing the valve element **82** to seat against the seat element **70** and stop the flow of fluid through the apertures **108**.

If the flow control equipment of a well should become damaged, such as by rupture of a flow line, failure of a well control valve, etc. and uncontrolled flow of well fluid is allowed to occur, the pressure of flowing fluid within the tubing of the well will obviously decrease. The decrease in flowing pressure will be reflected throughout the production system of the well to or beyond the casing perforations through which pressurized fluid flows from the production formation. Uncontrolled flow therefore causes a decrease in ambient pressure at all levels within the well casing. It is desirable, therefore, to provide a safety valve mechanism with means for effecting closure of a safety valve responsive to a predetermined decrease in ambient pressure. According to the present invention, one suitable means for achieving valve closure, where the valve is actuated to the closed position thereof by a condition of predetermined pressure differential, may conve-

niently take the form illustrated particularly in FIG. 2C where a combination inlet adapter and support sleeve **146** is shown to be provided with upper and lower internally threaded extremities **148** and **150**, respectively, for connection to externally threaded portions **152** of coupling element **66** and **154** of a coupling element **156**. The coupling element **156**, in turn, may be provided with an externally threaded lower portion **158** adapted to receive internal threads **160** defined within the upper extremity of a pressure dome housing **162**. The housing **162** may be closed at its lower extremity by a closure plug **164** having an externally threaded portion **166** disposed in threaded connection with the lower internally threaded portion **168** of the housing **162**. The closure plug **164** cooperates with the housing **162** and coupling element **156** to define an internal pressure chamber or dome, within which may be introduced a gaseous medium at any suitable pressure, depending upon the desired operational characteristics of the safety valve mechanism.

For the purpose of introducing the pressurized gaseous medium into the pressure chamber **170**, the closure plug **164** may be manufactured to define a gas inlet passage **172** communicated with a closure bore **174** and an internally threaded gas supply connector receptacle **176**. The closure bore **174** may have an internally threaded outer extremity **178** for threaded connection of a closure element **180** within the bore **174**. Sealing elements **182**, carried within an annular groove **184** defined in the closure element **180**, serve to establish sealing engagement between the closure plug and a sealing surface defined by the cylindrical wall of the bore **174**. Within an annular groove defined at the upper extremity of enclosure element **180** may be disposed a sealing element **186** that may be urged into sealed engagement with a frusto-conical sealing surface **188** defined about the inlet passage **172**.

When it is desired to introduce pressurized gaseous medium into the pressure chamber **170**, the closure element **180** may be unthreaded sufficiently to move the sealing element **186** away from the sealing surface **188** and allow communication between the passage **172** and the gas supply receptacle **176**. The gas supply conduit may be threadedly connected to receptacle **176** and gas may be introduced through the passage **172** until the pressure chamber **170** has reached an operating pressure. The closure element **180** then may be threaded fully into the bore **174**, thereby urging the seal element **186** into tight sealing engagement against the sealing surface **188**. After this has been accomplished, the gas supply conduit may be unthreaded from the threaded receptacle **176** and, if desired, the receptacle may be suitably plugged.

The upper extremity of the coupling **156** may be provided with a plunger bore **190** through which a generally cylindrical portion **192** of a plunger element **194** may extend. An annular sealing element **196**, such as an O-ring or the like, may be retained within an annular groove **197** defined within the bore **190** and may establish sealing engagement with the cylindrical surface **198** defined by the cylindrical portion of the plunger. An annular rigid seal carrier **200** may be retained in fixed relation to the housing **162** by an inwardly extending shoulder **202** defined at the lower extremity of the coupling **156** and may be sealed relative to the housing by an annular sealing element **204** retained within an external groove defined in the seal carrier. A sealing element **206** may be retained within an internal annular seal groove defined in the seal carrier and may establish sealing engagement with the cylindrical surface **198** of the plunger **194**. The seal carrier **200**, the sealing element **196**, the coupling **156** and the seal ring **196** cooperate to define sealed passages through which the plunger **194** may extend. Moreover, the bores through the seal carrier and coupling also serve effectively as guiding surfaces to maintain alignment of the plunger with the inlet aperture **112** during linear movement thereof.

It may be desirable to add, to the force created by the compressed gaseous medium acting upon the plunger, a mechanical force such as might be developed by a compression spring **208** or any other suitable urging means to develop a resultant force tending to urge an enlarged head portion **210** of the plunger into restricting relation with an inlet aperture **212** in the coupling element **66** to restrict the flow of production fluid through the coupling passage **114** and into the safety valve mechanism. The combined forces of gas pressure and the spring force acting upon the plunger, during normal operation of the safety valve mechanism, are overcome by a resultant downward force, acting upon the plunger, that is developed by ambient pressure and maintains the plunger in its FIG. 2C position thereof until ambient pressure decreases below a predetermined minimum level. The pressurized medium within the pressure chamber or dome **170** is always maintained at a lower pressure than the ambient pressure expected during normal operation of the flow system of the well and the combined forces developed by the gaseous medium within the pressure chamber and the force developed by the compression spring will be less than the downward force developed by ambient pressure during normal valve operation.

As an illustration of the foregoing, the pressure of the compressible medium in the pressure dome may be designated P_g, while the pressure of production fluid flowing through the safety valve mechanism may be P_f, the force exerted by the compression spring in the pressure dome may be P_s and ambient pressure may be designated P_a. During normal operation of the flow system of the well $P_g + P_s$ is less than P_a and, therefore, the plunger will be retained in its lowermost position by the resultant force acting on the plunger and the inlet aperture **212** will be unrestricted. Also during normal operation of the flow system, P_f will be less than P_a and the valve actuating mechanism will be maintained in the open position thereof by the resultant force created by pressure differential between P_f and P_a.

When an adverse well condition is developed, due to failure of the flow system that would otherwise cause excessive flow to occur in the well flow system, P_f will suddenly decrease and this pressure decrease will be reflected by a decrease in the ambient pressure P_a of the well. When this occurs $P_g + P_s$ will exert a force on the plunger that is greater than the opposing force caused by ambient pressure P_a acting on the plunger and the resultant force between these two opposing forces will cause the plunger to be moved upwardly causing the head portion of the plunger to restrict the inlet opening **212**. This will cause a pressure differential to be created across the inlet aperture between ambient pressure P_a and flowing pressure P_f which pressure differential will develop a resultant force acting on the piston **134** of the valve actuating sleeve element **90**

which urges the sleeve and the valve element **82** to the closed position thereof.

OPERATION

Assuming the safety valve mechanism of this invention to be connected to a tubing string in conventional manner and also assuming it to be disposed in the flowing condition thereof as shown in FIGS. 2A, 2B, 2C, 3A and 3B, production fluid will be entering the safety valve mechanism through the inlet slots **113** and will be flowing through the inlet aperture **212** and inlet passage **114** into the tubular valve housing and will flow through inlet apertures **108** into the flow passage **110** defined by the valve actuating sleeve element **90.** The compression spring **112** will develop a force acting downwardly upon the annular shoulder **116** of the valve actuating sleeve and will overbalance a force developed by ambient pressure within the valve actuating chamber **142** acting upwardly upon the piston portion **134** of the sleeve element, thereby resulting in a net downward force which maintains the sleeve in its lowermost position against the tapered stop shoulder **124.** Under this condition the valve element will be open and production fluid will be produced in unrestricted manner through the safety valve mechanism and the tubing string. The flow of production fluid will be controlled elsewhere in the flow system, such as by a choke disposed in the surface flow control equipment.

Ambient pressure will act upon the plunger **194** and will develop a force that overbalances the combined forces developed by pressurized medium within the pressure chamber **170** and by the compression spring **208,** thereby developing a net downward force maintaining the support shoulder **211** in engagement with the upper portion of the coupling **156.**

If a failure occurs in the production system of the well and a substantial decrease in flowing pressure occurs, this decrease will be reflected through the safety valve mechanism thereby resulting in a decrease in ambient pressure within the well casing. As ambient pressure decreases, the net downward force acting upon the plunger **194** will be reduced and perhaps will be dissipated, thereby resulting in a net upward force acting upon the plunger due to the combined effects of the spring force and gas pressure force exerted upon the plunger from within the pressure chamber **170.** When this occurs, the plunger will begin to move upwardly causing the head portion of the plunger to move into restricting relation with the inlet aperture **212,** thereby causing a pressure drop to be developed across the inlet aperture. The pressure drop is of course reflected downstream from the aperture into the flow passage **110** and also causes the development of a greater pressure differential acting across the piston portion **134** of the valve actuating sleeve **90** which reduces the net downward force acting upon the sleeve.

If ambient pressure should decrease below a predetermined minimum operating level the head portion **210** of the plunger will be caused to move into juxtaposed relation with the inlet aperture **212,** thereby developing a severe pressure drop across the inlet aperture **212.** This condition causes a severe pressure differential to exist across the piston element **134,** due to ambient pressure within the valve actuating chamber **142** acting upwardly on the piston which develops a force of sufficient magnitude to overcome the compression force of spring **112,** and thereby urges the valve actuating sleeve **90** upwardly and moves the valve element **82** to its closed position as shown in FIGS. 4A and 4B.

As soon as the valve element **82** moves to its closed position and the sealing element **104** achieves sealing engagement with the sealing surface **80** of the valve seat element **70,** flow of production fluid through the valve will be stopped and the valve element will remain closed due to the pressure differential acting upon the piston portion **134** of the valve actuating sleeve **90.** When the flow of production fluid through the valve is stopped, pressure within the inlet passage **114** upstream of the valve element will quickly become balanced with ambient pressure. Moreover, because the valve element **82** has sealed the low pressure condition from the inlet passage, the reduced pressure condition will no longer be reflected below the safety valve. Ambient pressure within the well, therefore, will suddenly increase to the maximum well pressure and the increased ambient pressure, acting upon the plunger **194,** will again develop a net downward force that will urge the plunger to the lowermost position thereof.

When it is desired to reopen the safety valve mechanism, after the production system of the well has been restored to proper operating condition, a pressurized medium may be injected into the tubing string above or downstream of the valve and, acting upon surface area A2 will develop a force which, when added to the force developed by compression spring **112,** will overcome the force developed by ambient pressure acting on area A1 of the piston. A downward resultant force is thereby produced that will move the actuating sleeve and the valve element to the open position thereof, as shown in FIG. 2A. At this time, ambient pressure will be at its highest level and production flow may be initiated simply by bleeding off the injected pressure, such as by opening of a surface flow control valve of the well production system.

The safety valve mechanism of this invention provides a valve mechanism that will remain open, allowing normal unrestricted flow of production fluid as long as ambient pressure within the well remains within a predetermined operating range. A mechanism is provided for closure of the safety valve assembly responsive to development of a predetermined decrease in ambient pressure and means is also provided for developing a pressure differential capable of actuating the valve assembly to its closed position responsive to decrease in ambient pressure below a predetermined minimum pressure level. During normal operating conditions, the valve actuating sleeve and valve assembly of the present invention will be maintained in a static position and will not be allowed to reciprocate as is typically the case where a safety valve mechanism is maintained in its open position by force developed solely by pressure differential across a restriction provided in the flow path through the valve mechanism.

After becoming automatically closed responsive to predetermined decrease in ambient pressure, the valve assembly may be reopened and placed back in production by simple injection of pressure into the tubing string above the valve.

Since the valve closes automatically, responsive to decrease in ambient pressure below a predetermined operating level, the valve may be effectively tested simply by opening a surface control valve sufficiently to increase production flow and thereby reflect a prede-

termined decrease in pressure into the well casing. The valve will shut in as soon as ambient pressure decreases to a level allowing the plunger **194** to be urged, by the combined forces of the compression spring **208** and the fluid pressure within the pressure chamber **170**, into restricting relation with the inlet aperture **112**. If, during inspection or testing, the valve mechanism is found to be in need of servicing, the valve mechanism may be removed from the flow control system of the well without necessitating removal of the tubing string. A conventional wire line tool may be utilized to retrieve and replace the safety valve mechanism.

It is therefore seen that this invention is one well adapted to attain all of the objects and advantages, hereinabove set forth, together with other advantages, which will become obvious and inherent from a description of the apparatus itself. It will be understood that certain combinations and subcombinations are of utility and may be employed without reference to other features and subcombinations. This is contemplated by and is within the scope of the present invention.

As many possible embodiments may be made of this invention without departing from the spirit or scope thereof, it is to be understood that all matters, hereinabove set forth or shown in the accompanying drawings, are to be interpreted as illustrative and not in any limiting sense.

What is claimed is:

1. A safety valve apparatus comprising:

valve means being supported by a well tubing and including co-engageable means being movable between open and closed positions responsive to a pressure differential of a predetermined magnitude; and

flow restriction means being disposed upstream of said valve means and being responsive to a decrease in ambient pressure in the well bore for developing said pressure differential.

2. A safety valve apparatus as recited in claim **1**, wherein:

said flow restriction means includes a movable element that restricts the flow of production fluid toward said valve element.

3. A safety valve apparatus as recited in claim **1**, wherein:

said valve means includes an inlet opening; and

said developing means comprises a piston having a force due to said ambient pressure applied to one side thereof and a substantially constant preselected opposing force applied to the other side thereof.

4. A valve apparatus as recited in claim **3**, wherein:

said piston defines a plunger cooperating with said inlet opening to restrict the size of said opening responsive to said decrease in ambient pressure.

5. A safety valve apparatus adapted to be positioned within a well casing of a well having formation pressure comprising:

valve housing means adapted for connection to the production tubing of said well, said housing means having inlet and outlet aperture means communicating said valve housing respectively with said casing and said production tubing;

seat means disposed within said housing means;

valve means disposed within a said housing means and being movable relative to said seat means for controlling the flow of fluid through said valve apparatus;

means urging said valve means toward the open position thereof;

valve actuator piston means being disposed in movable relation to said housing means and being movable relative to said valve housing responsive to predetermined pressure differential between ambient pressure and pressure within said valve housing means, said valve actuator means, upon being moved, inducing opening and closing movement to said valve means; and

flow restricting means being supported within said well casing upstream of said valve means and being responsive to ambient pressure for controlling the flow of production fluid toward said valve means, said flow restricting means developing said predetermined pressure differential responsive to predetermined decrease in ambient pressure.

6. A safety valve apparatus as recited in claim **5**, wherein said developing means comprises:

piston means movable supported by said valve housing means and being movable between a position allowing unrestricted flow of fluid through said inlet aperture means and positions restricting the flow of fluid through said inlet aperture means;

means urging said piston means toward said positions restricting the flow of fluid through said inlet aperture means; and ambient pressure acting upon said piston means and developing a force opposing said urging means and maintaining said piston means in the said position allowing unrestricted flow of fluid.

7. A safety valve apparatus as recited in claim **6**:

said housing defining a piston actuating chamber, said piston means being disposed in sealed relation relative to said piston actuating chamber; and

a compressible medium disposed within said piston actuating chamber and urging said piston toward said second position thereof.

8. A safety valve apparatus as recited in claim **5**:

said housing defining pressure dome means;

a piston movably carried by said pressure dome means and having a plunger portion thereof disposed for restricting relation with said inlet aperture means;

means urging said piston toward a position restricting said inlet aperture means; and

ambient pressure acting upon said piston and overcoming said urging means and maintaining said piston in a retracted position allowing unrestricted flow of fluid through said inlet aperture means, said urging means moving said plunger toward said restricting position upon decrease of said ambient pressure below a predetermined pressure level.

9. A safety valve apparatus as recited in claim **8**:

said means urging said piston toward said restricting position comprising a compression spring interposed between said housing means and said piston.

10. A safety valve apparatus as recited in claim **8**:

said means urging said piston toward said restricting position comprising a compressible medium disposed within said pressure dome and acting upon said piston, said compressible medium being normally of lower pressure than the normal operating range of said ambient pressure.

11. A safety valve apparatus as recited in claim **8**:

said valve housing defining a pressure dome;

said piston extending in sealed relation into said pressure dome; and

a compressible medium disposed within said pressure dome and acting upon said piston to urge said piston in a direction restricting said inlet aperture.

12. A safety valve apparatus as recited in claim **11**:

a compression spring disposed within said pressure dome and supplementing the urging force applied to said plunger by said compressible medium.

13. A safety valve apparatus comprising:

housing means adapted for connection to the production tubing of a well having formation pressure for producing the well, said housing means defining flow passage means and having inlet aperture means communicating said flow passage means with ambient pressure and having an outlet aperture means communicating said flow passage means with said production tubing;

seat means disposed within said housing;

valve means movably disposed within said housing and being movable between open and closed positions relative to said seat means for controlling the flow of fluid through said flow passage means;

means urging said valve means toward the open position thereof;

piston means being carried by said valve means and being movable within said housing responsive to predetermined pressure differential between ambient pressure and pressure downstream of said valve means for moving said valve means to the closed position thereof against the bias of said urging means; and

flow restricting means being supported within said casing upstream of said valve means and being responsive to ambient pressure for controlling the flow of production fluid toward said valve means, said flow restricting means developing said pressure differential responsive to a predetermined decrease in ambient pressure.

14. A safety valve apparatus as recited in claim **13**:

said flow restricting means being a movable element carried by said housing means and being movable between a position allowing full flow of production fluid through said inlet aperture and positions restricting the flow of production fluid through said inlet aperture; and

means for moving said movable element toward said positions restricting the flow of production fluid.

15. A safety valve apparatus as recited in claim **14**:

said moving means comprising first and second urging means acting in combination; and

said ambient pressure normally developing a force acting on said movable element overcoming both of said urging means and retaining said movable element in said position allowing full flow of production fluid.

16. A safety valve apparatus as recited in claim **13**:

said housing defining a piston carrier section; and

a piston carried by said piston carrier section and being movable between a position allowing unrestricted flow of production fluid through said inlet aperture means and positions restricting flow of production fluid through said inlet aperture, movement of said piston being controlled by force differential responsive to predetermined decrease in ambient pressure.

17. A safety valve apparatus as recited in claim **16**:

said force differential acting upon said piston being defined by mechanically created force urging said piston toward said positions restricting flow of production fluid and a force created by ambient pressure acting upon said plunger and urging said plunger toward said position allowing unrestricted flow of production fluid.

18. A safety valve apparatus as recited in claim **16**:

said force differential acting upon said plunger being defined by static pressure means acting upon said plunger and creating a force urging said plunger toward said positions restricting the flow of production fluid and a force created by ambient pressure acting upon said plunger and urging said plunger toward said position allowing unrestricted flow of production fluid.

19. A safety valve apparatus as recited in claim **17**:

said force differential acting upon said plunger being defined by a mechanically created force and a force defined by static pressure acting together upon said piston and urging said plunger toward said positions restricting the flow of production fluid and a force created by ambient pressure acting upon said plunger and urging said plunger toward said position allowing unrestricted flow of production fluid.

* * * * *