(12) INTERNATIONAL APPLICATION PUBLISHED UNDER THE PATENT COOPERATION TREATY (PCT)

(19) World Intellectual Property Organization
International Bureau

(43) International Publication Date
4 August 2016 (04.08.2016)

WIPO | PCT

(10) International Publication Number
WO 2016/123204 A1

(51) International Patent Classification:
H01R 13/627 (2006.01) *G02B 6/42* (2006.01)

(21) International Application Number:
PCT/US2016/015098

(22) International Filing Date:
27 January 2016 (27.01.2016)

(25) Filing Language: English

(26) Publication Language: English

(30) Priority Data:
62/108,276 27 January 2015 (27.01.2015) US

(71) Applicant: **MOLEX, LLC** [US/US]; 2222 Wellington Court, Lisle, Illinois 60532 (US).

(72) Inventors: **DAMBACH, Philip J.**; c/o Molex, LLC, 2222 Wellington Court, Lisle, Illinois 60532 (US). **REGNIER, Kent E.**; c/o Molex, LLC, 2222 Wellington Court, Lisle, Illinois 60532 (US).

(74) Agent: **SHELDON, Stephen L.**; Molex, LLC, 2222 Wellington Court, Lisle, Illinois 60532 (US).

(81) Designated States *(unless otherwise indicated, for every kind of national protection available)*: AE, AG, AL, AM, AO, AT, AU, AZ, BA, BB, BG, BH, BN, BR, BW, BY, BZ, CA, CH, CL, CN, CO, CR, CU, CZ, DE, DK, DM, DO, DZ, EC, EE, EG, ES, FI, GB, GD, GE, GH, GM, GT, HN, HR, HU, ID, IL, IN, IR, IS, JP, KE, KG, KN, KP, KR, KZ, LA, LC, LK, LR, LS, LU, LY, MA, MD, ME, MG, MK, MN, MW, MX, MY, MZ, NA, NG, NI, NO, NZ, OM, PA, PE, PG, PH, PL, PT, QA, RO, RS, RU, RW, SA, SC, SD, SE, SG, SK, SL, SM, ST, SV, SY, TH, TJ, TM, TN, TR, TT, TZ, UA, UG, US, UZ, VC, VN, ZA, ZM, ZW.

(84) Designated States *(unless otherwise indicated, for every kind of regional protection available)*: ARIPO (BW, GH, GM, KE, LR, LS, MW, MZ, NA, RW, SD, SL, ST, SZ, TZ, UG, ZM, ZW), Eurasian (AM, AZ, BY, KG, KZ, RU, TJ, TM), European (AL, AT, BE, BG, CH, CY, CZ, DE, DK, EE, ES, FI, FR, GB, GR, HR, HU, IE, IS, IT, LT, LU, LV, MC, MK, MT, NL, NO, PL, PT, RO, RS, SE, SI, SK, SM, TR), OAPI (BF, BJ, CF, CG, CI, CM, GA, GN, GQ, GW, KM, ML, MR, NE, SN, TD, TG).

Published:

— *with international search report (Art. 21(3))*

— *before the expiration of the time limit for amending the claims and to be republished in the event of receipt of amendments (Rule 48.2(h))*

(54) Title: PLUG MODULE SYSTEM

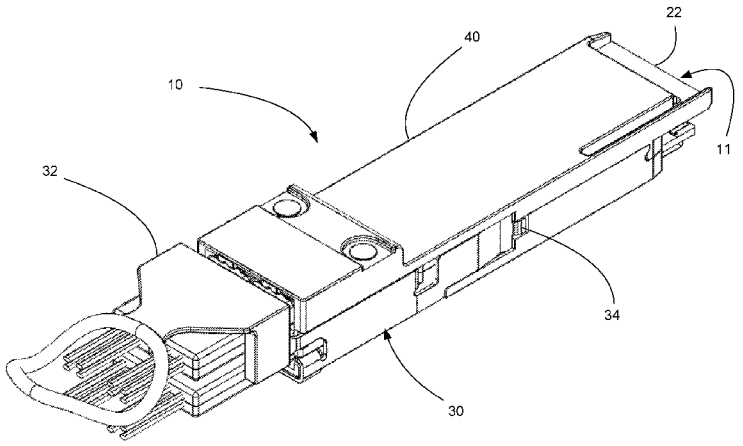

Fig. 1

(57) Abstract: A plug module is provided that includes a first mating end and a second mating end. The first mating end is configured to mate with a predefined port, such as a QSFP port. The second mating end can support two or more micro receptacles that allow the plug module to provide an octopus-like cable assembly without requiring the predetermination of a particular length of cable.

WO 2016/123204 A1

Plug Module System

RELATED APPLICATIONS

[0001] This application claims priority to United States Provisional Application No. 62/108,276, filed January 27, 2015, which is incorporated herein by reference in its entirety.

TECHNICAL FIELD

[0002] This disclosure relates to the field of input/output (IO) connectors, more specifically to IO connectors suitable for use in high data rate applications.

DESCRIPTION OF RELATED ART

[0003] Input/output (IO) connectors that have four communication channels (e.g., 4 transmits and 4 receives) are known. One example is the quad small form-factor pluggable (QSFP) connector. These types of connectors are suited to support high bandwidth applications due to the inclusion of the four communication channels.

[0004] One issue that sometimes comes up with a connector such as the QSFP style connector is that there is a desire to have a large amount of bandwidth available on a switch that is positioned as a Top of Rack (ToR) switch but the bandwidth available in one QSFP port provided in such a ToR switch might be greater than another single port really needs. The desire to break out the channel sometimes existed in standard QSFP products that provided 40 Gbps and this desired is expected to become a more prevalent issue in products designed to support 100 Gbps, such as 100 Gbps capable QSFP products.

[0005] One existing way to address this issue is to have what is sometime referred to as a break-out cable or octopus cable. For example, a cable assembly could have a QSFP plug module on one end and have four cables extending from the QSFP plug to four separate small form-factor pluggable (SFP) style plug modules. This allows a single QSFP port to communicate with 4 SFP ports and, for high performing assemblies, each communication channel can support 25 Gbps of bidirectional communication. While this is an effective way to break out the four communication channels so as to allow one port to communicate with four other ports, the use of octopus cables is generally disfavored. One issue is that a cable from a ToR switch will have to reach lengths of less than a foot to more than a meter. As can

be appreciated, it is difficult to know in advance how far each cable of an octopus cable assembly is going to need to reach. Therefore it is common to select a length that is long enough for all cases but is too long for most cases. This tends to result in a mess of cables that is difficult to understand or work with once installed. Consequentially, certain individuals would appreciate further improvements in connector configurations.

SUMMARY

[0006] A plug module is disclosed that includes a first mating end that is configured to mate with a predefined port (such as a conventional connector receptacle) and has a second mating end that includes a plurality of micro receptacles. A paddle card can be positioned at the first mating end and the micro receptacles can be supported so that they are offset upward, compared to the paddle card. A plurality of cable assemblies with micro plugs can be connected to the plurality of micro receptacles such that each cable assembly can offer a different length and have a desired far end termination configuration.

BRIEF DESCRIPTION OF THE DRAWINGS

[0007] The present invention is illustrated by way of example and not limited in the accompanying figures in which like reference numerals indicate similar elements and in which:

[0008] Fig. 1 illustrates a perspective view of an embodiment of a break out connector module.

[0009] Fig. 2 illustrates a simplified perspective view of the embodiment depicted in Fig. 1.

[0010] Fig. 3 illustrates a perspective, partially exploded view of the embodiment depicted in Fig. 2.

[0011] Fig. 4 illustrates an exploded perspective view of the embodiment depicted in Fig. 2.

[0012] Fig. 5 illustrates a perspective simplified view of the embodiment depicted in Fig. 4.

[0013] Fig. 6 illustrates a perspective enlarged view of the embodiment depicted in Fig. 5.

[0014] Fig. 7 illustrates a perspective simplified view of the embodiment depicted in Fig. 6.

[0015] Fig. 8 illustrates a perspective view of the embodiment depicted in Fig. 7.

[0016] Fig. 9 illustrates a perspective view of the embodiment depicted in Fig. 8 but with a latch in a second position.

[0017] Fig. 10 illustrates a perspective view of an embodiment of a break out module with the latch system removed.

[0018] Fig. 11 illustrates a perspective view of an embodiment of a circuit board supporting four connectors.

[0019] Fig. 12 illustrates a perspective simplified view of the embodiment depicted in Fig. 11 with just one connector housing positioned on the circuit board.

[0020] Fig. 13 illustrates another perspective view of the embodiment depicted in Fig. 12.

[0021] Fig. 14 illustrates a perspective view of an embodiment of a first housing wafer.

[0022] Fig. 15 illustrates another perspective view of the embodiment depicted in Fig. 14.

[0023] Fig. 16 illustrates a perspective view of an embodiment of a second housing wafer.

[0024] Fig. 17 illustrates another perspective view of the embodiment depicted in Fig. 16.

[0025] Fig. 18 illustrates a perspective, partially exploded view of an embodiment of a first housing wafer.

[0026] Fig. 19 illustrates another perspective view of the embodiment depicted in Fig. 18.

[0027] Fig. 20 illustrates another perspective view of the embodiment depicted in Fig. 18.

[0028] Fig. 21 illustrates an elevated rear view of a portion of an embodiment of a terminal set, showing an embodiment of uniform construction of the terminals.

[0029] Fig. 22 illustrates a perspective simplified view of an embodiment of a first housing wafer with a terminal block removed.

[0030] Fig. 23 illustrates a schematic representation of an embodiment of a cable assembly.

DETAILED DESCRIPTION

[0031] The detailed description that follows describes exemplary embodiments and is not intended to be limited to the expressly disclosed combination(s). Therefore, unless otherwise noted, features disclosed herein may be combined together to form additional combinations that were not otherwise shown for purposes of brevity.

[0032] As can be appreciated from the Figures, a plug module 10 is depicted and as depicted can result in a quad small-form factor pluggable (QSFP) module. Thus, the depicted embodiment allows for the insertion of the plug module 10 into an existing QSFP receptacle port and can provide four break out connectors. QSFP modules are fairly beneficial for Top of Rack (ToR) applications as well as many other applications that benefit from 4 channels of high-speed data. The features discussed herein, however, are not limited to use with QSFP style connectors as other sized plug receptacle could also provide similar functionality (with larger plug modules potentially supporting additional connectors).

[0033] The depicted plug module 10 includes a latch 30 with an optional pull-tab 32 that is removed in Fig. 2. As can be appreciated, the plug module has a body 40 formed of a lower half 43a and an upper half 43b that are secured together with fasteners 44 and the plug module 10 has a first mating end 11 and a second mating end 12 opposing the first mating end 11. In operation, the first mating end 11 is configured to mate with a receptacle (not shown but which could be a standard QSFP receptacle) and the second mating end 12 is intended to provide receptacles as discussed herein.

[0034] A paddle card 45 with contact pads 46 is provided on a first mating end 11 and the paddle card 45 is configured to mate with a corresponding connector (typically one that includes a card slot). Four micro receptacles 60 are provided at the second mating end 12 and each micro receptacle 60 includes a mating face 61a and a rear face 61b. While such data rates are not required, the micro receptacles 60 mounted in the plug module 10 can each support a two-way 25 Gbps channel with a design that provides one transmit pair and one receive pair (both configured to operate at 25 Gbps using NRZ encoding) with a total of 16 pins while being less than 7 mm wide. It should be noted that the depicted plug module 10 is

configured as a QSFP style plug module and thus is intended to mate with a receptacle that supports four two-way channels (e.g., with a 4X receptacle) and thus it makes sense to break out the one 4X into four 1X connectors. Do to size constraints, the micro receptacles 60 have less pins than a typical SFP connector would have but for many applications the 16 pins are sufficient. It should be noted that if the plug module was configured to engage a 2X receptacle then two 1X connectors would be sufficient from a break out standpoint and the design of the plug module could be so modified.

[0035] Each micro receptacle 60 is supported on a micro board 52 and includes a cage 62 and a latch 63. The latch 63 ensures that a mating micro plug connector 90 is securely fastened to the micro receptacle 60 and is not going to fall out do to vibration and inadvertent application of force to the micro plug connector 90. It should be noted that the depicted design includes a cable 47 (shown in truncated manner) that connects the paddle card 45 to the micro board 52. For purposes of illustration the termination of the cable 47 to the micro board 52 is omitted as such a termination is known and can be substantially the same as the termination shown on the paddle card 45. As is discussed, such a configuration is not required but it has been determination that such a configuration is desirable because it allows the micro board 52 to be offset upward compared to the paddle card 45. It turns out that offsetting the micro receptacles upward compared to the paddle card 45 is beneficial for users and it can help make it easier to package the plug module in a given system. Alternative embodiments could use flex circuitry to connect the micro receptacles 60 to the paddle card 45 and still provide the offset configuration. Other alternative embodiments that provide the optional offset configuration could include the use of a non-planar circuit board but in general a circuit board tends to be more lossy than a cable so care is needed to ensure the selected configuration is compatible with the signaling frequency and loss budget.

[0036] The micro receptacles 60 provide a micro port 65 that is defined by the cage 62 (preferably formed of a metal) that extends around a tongue 73 of a housing 70 that is formed of an insulative material. The housing 70 supports the terminals 80. In an embodiment the housing can be formed of a first wafer housing 71a and a second wafer housing 71b, where the first and second wafer housings 71a, 71b are each insert molded around a row of terminals such that corresponding contacts 80a are supported on a first tongue half 73a and a second tongue half 73b.

[0037] As can be appreciated, the micro receptacles 60 are configured as right-angle SMT style connectors with terminal sets 68 that each provide a row of terminals and are intended to be mounted on a pad array 54 on the micro board 52. In an embodiment the terminal sets 68 can have terminals 80 on a 0.5 mm pitch. Each of the terminals 80 includes a contact 80a, a tail 80b and a body 80c that extend therebetween. As can be appreciated, the tails 80b can be provided in two rows. Naturally, the mating micro plug connector 90 has mating terminals that are also arranged at a 0.5 mm pitch. In spite of the small size, the far end crosstalk can be more than 35 dB down and preferably can be more than 40 dB down out to 12.5 GHz signaling frequency.

[0038] To help provide the desirable performance, one of the rows of terminals can include signal terminals 86 (that form differential signal pairs 89a, 89b) spaced apart by a ground terminal 85 and in an embodiment the tongue and contact configuration can be adjusted so that the ground terminals 85 extends past the signal terminals 86 and notches 74a, 74b are provided in the first and second tongue halves 73a, 73b where the corresponding notch is placed at the end of the signal terminals 86 that form the differential pair. While such an optional configuration is not required, it has been determined that for a compact design as depicted it is beneficial to have the notches 74a, 74b as depicted so as to improve the tuning of the terminals. The notches 74a, 74gb, in combination with tuning apertures 77, can be arranged so that the signal terminals are preferentially coupled (e.g., more signal energy travels on the signal terminals than would normally travel on a symmetric configuration). This can be done by modifying the dielectric constant of the structure surrounding the signal terminals so that they are more tightly coupled together than one of the signal terminals is coupled to an adjacent ground terminal. As can be appreciated from Fig. 21, however, in an embodiment the spacing and construction of the terminals can be symmetric in that the space between ground and signal terminals, along with the shape of the terminals, is substantially the same along the body and tail sections.

[0039] As depicted, the first wafer half 71a includes a terminal block 82 that attaches to a projection 81 via a receiving channel 84. The terminal block 82, while it can be integrated into the first wafer half 71a, is preferably separate and provides a terminal comb 83 that helps control the location and spacing of the tails. The second wafer half 71b can be an integral unit, as is depicted.

[0040] One issue that exists is the inclusion of the latch 63. As can be appreciated, there is very little space available and a latch that could be operated without a tool would be difficult to package. For certain applications a latch may not be required. However, for server applications and any applications where there is a need for a robust configuration that is resistant to accidental disengagement of a connector, a latch is needed. While it is common to place the latch on the plug module, the micro plug modules are so small and the space is so tight when they are arranged as depicted that providing a latch on the micro plugs is not feasible. As a result, Applicants have determined that the latch 63 can be provided on the micro receptacle 60.

[0041] The depicted system therefore includes an optional latch 63 that is configured to retain a micro plug module that is inserted into the micro receptacle. The latch 63 includes a securing arm 63a that has one end secured to the cage 62 of the micro receptacle 60 and has retaining fingers 63b that extend through retaining apertures 64 in the cage 62 so that the retaining fingers 63b can engage the inserted plug connector and a release flange 63c is moveable with the use of a tool. In operation a tool can be inserted under the release flange 63c so as to cause the securing arm 63a to be translated upward. This will cause retaining fingers 63b on the securing arm 63a to disengage from retaining holes in the micro plug and the micro plug can then be removed. The translation of the securing arm 63a can be appreciated from the embodiments depicted in Figs. 8 and 9. Naturally, if it is desirable to remove several micro plugs from a plug module 10 then it may be easier to first disconnect the plug module first and then remove the micro plugs.

[0042] As noted above, the micro receptacles 60 are mounted on a micro board 52. As depicted, the micro board 52 is separate from the paddle card 45. In an alternative embodiment the paddle card could be extended so that the micro board 52 and the paddle card 45 were integral or a single board and the micro receptacles 60 could be mounted directly on the paddle card 45 (and thus communicate via traces provided on the paddle card 45). Otherwise the micro board 52 and the paddle card 45 can be connected together in any desirable manner. It should be noted that if desired the plug module could also include circuitry such as a retimer and/or an amplifier to allow for improved operation.

[0043] While active components can be added, it should be noted that the depicted configuration is intended to work as a passive system in certain applications. This is beneficial because the micro plug modules can be mounted on a cable assembly that has a

different style connector on the opposite end. Thus the micro plug connector 90 could be provided on one end of a cable 92 and a conventional SFP style plug 94 could be placed on the other end (such as is depicted schematically in Fig. 23).

[0044] The disclosure provided herein describes features in terms of preferred and exemplary embodiments thereof. Numerous other embodiments, modifications and variations within the scope and spirit of the appended claims will occur to persons of ordinary skill in the art from a review of this disclosure.

We claim:

1. A plug module, comprising:

a body with a first mating end and a second mating end, the first end configured to be inserted into a predefined port;

a paddle card positioned in the first end and including a plurality of contact pads, the paddle card configured to receive at least two transmit channels and two receive channels; and

a first micro receptacle and a second micro receptacle supported at the second mating end, wherein the first and second micro receptacle are each configured to include one of the two transmit channels and one of the two receive channels.

2. The plug module of claim 1, further comprising a micro board that supports the first and second micro receptacles, the micro board offset upward compared to the paddle card.

3. The module of claim 2, wherein at least one cable connects the micro board to the paddle card.

4. The module of claims 2-3, wherein the micro receptacles are positioned on two sides of the micro board.

5. The module of claims 1-4, wherein each micro receptacle has at least 16 pins arranged on a 0.5 mm pitch.

6. The module of claims 1-5, wherein each micro receptacle includes an individual latch, each latch configured, in operation, to releasably engage a mating micro plug module.

7. A plug module system, comprising:

a plug module as defined in claim 6; and

a cable assembly mated to the plug module, the cable assembly including a micro plug connector with terminals at a 0.5 mm pitch, wherein the micro receptacle and the micro plug connector are configured to support 12.5 GHz signaling over a transmit channel and a receive channel with less than 35 dB far end crosstalk.

8. The module system of claim 7, wherein the cable assembly has an SFP connector mounted on the other end.

9. The module system of claim 7, wherein a plurality of cable assemblies are mounted to the plug module, wherein one of the plurality of cable assemblies has a first length and another of the plurality of cables assembles has a second length, the first length being different than the second length.

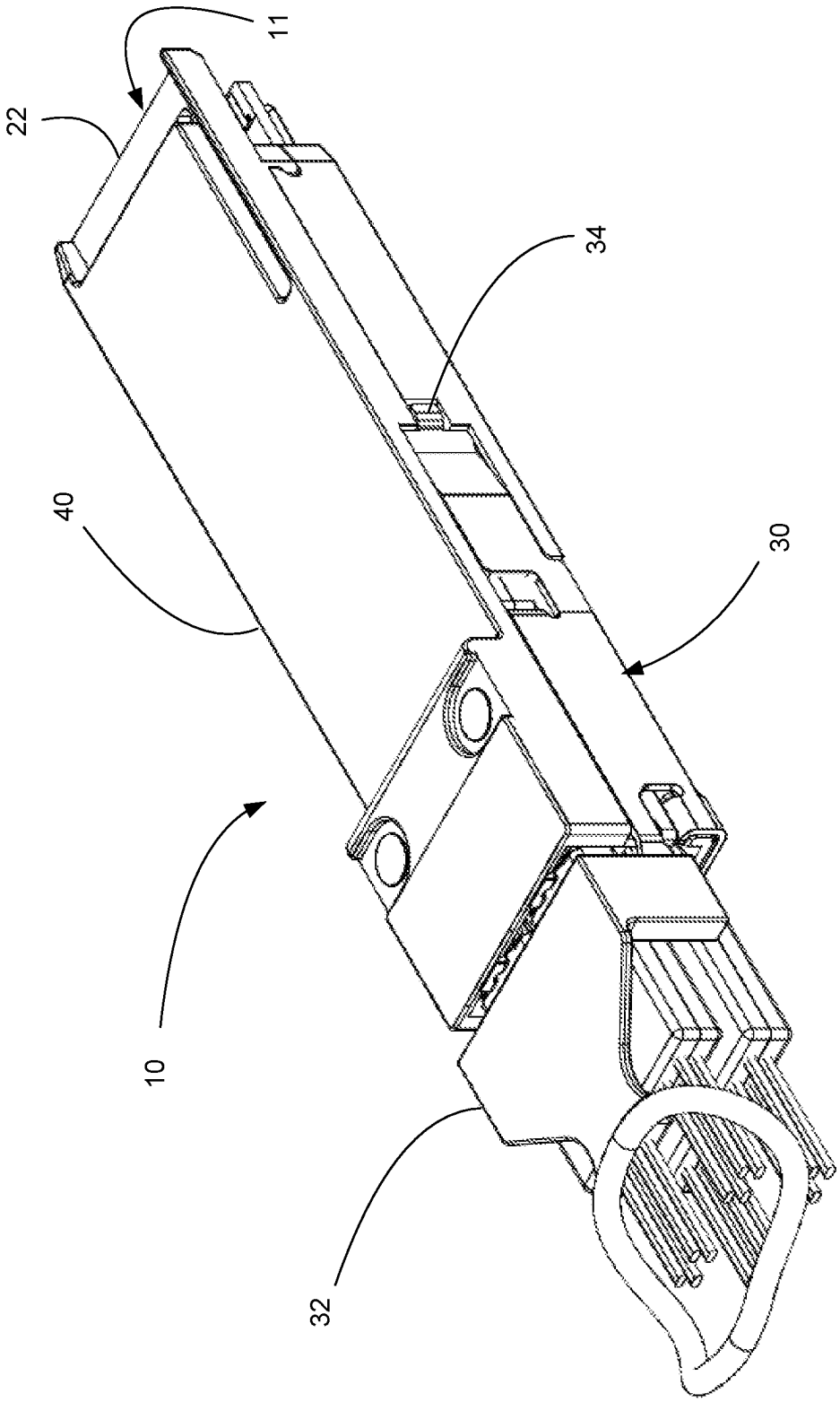

Fig. 1

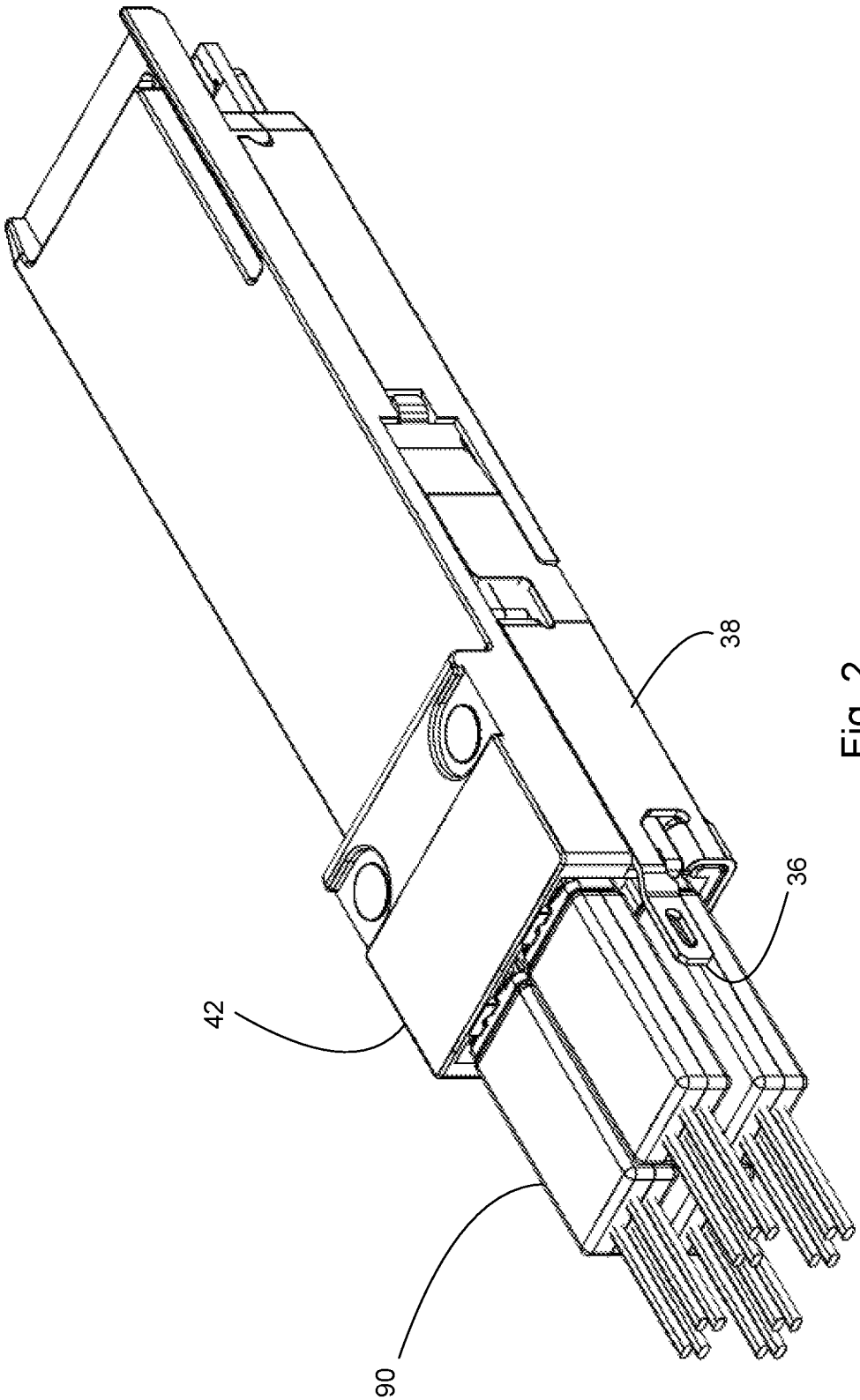

Fig. 2

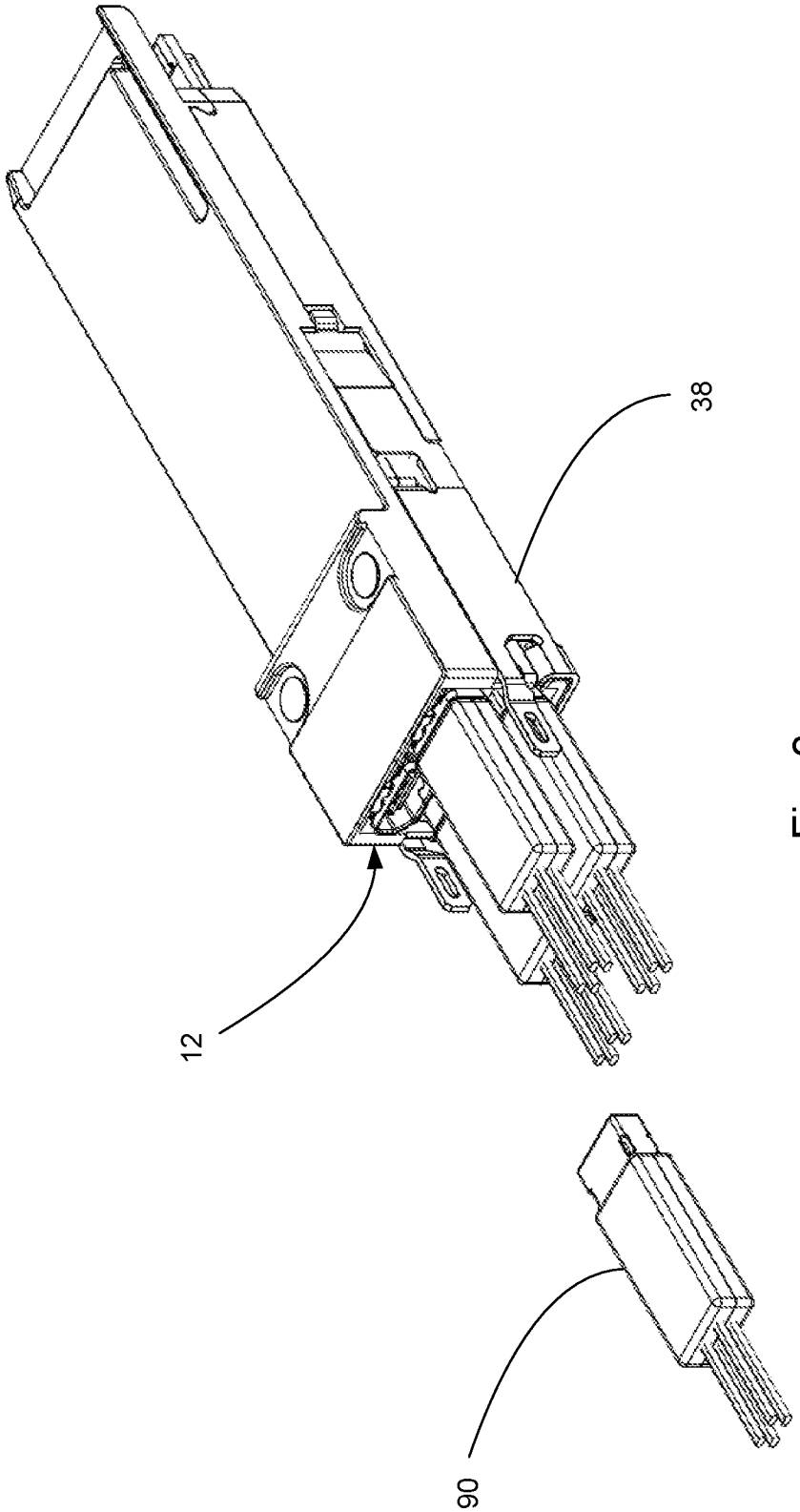

Fig. 3

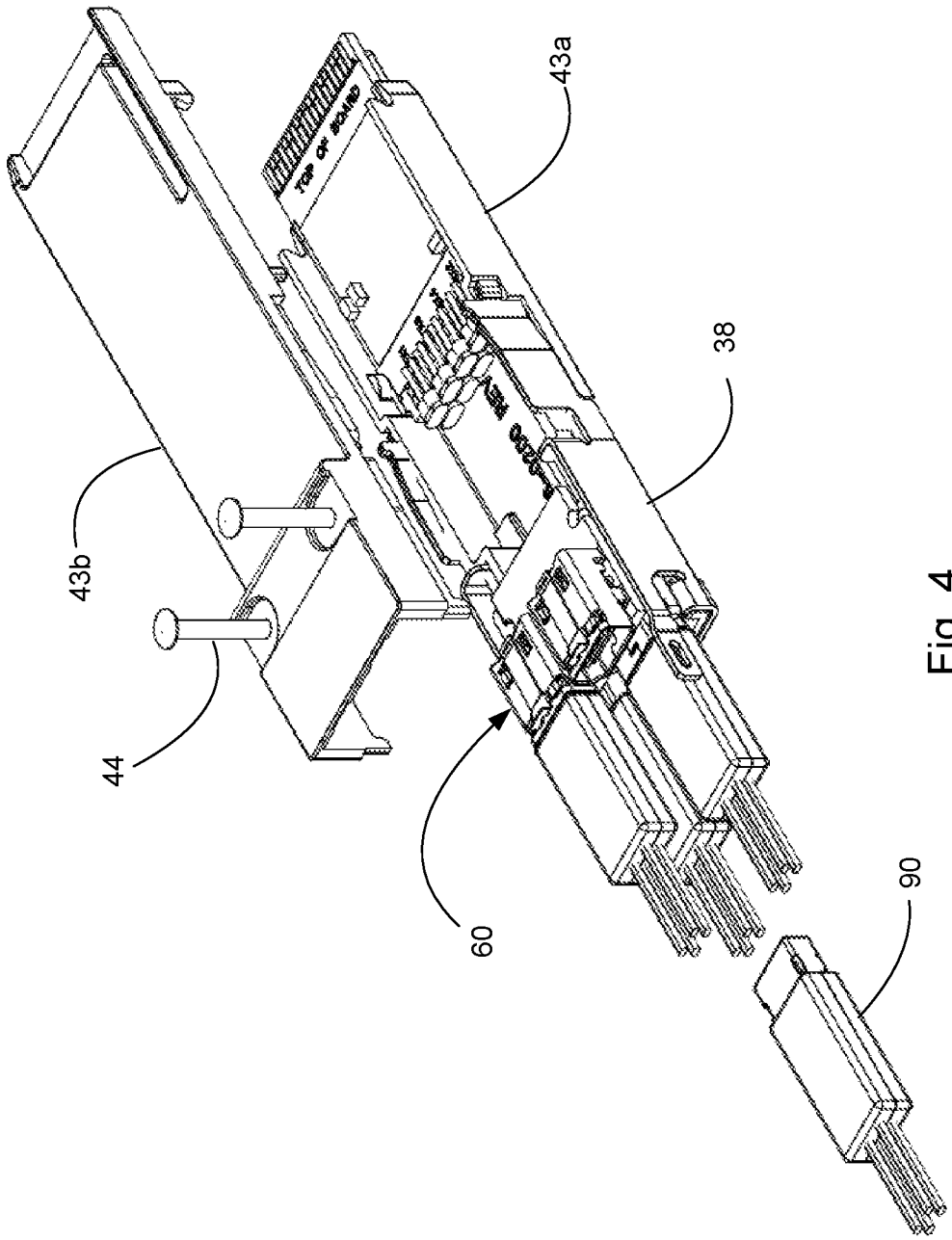

Fig. 4

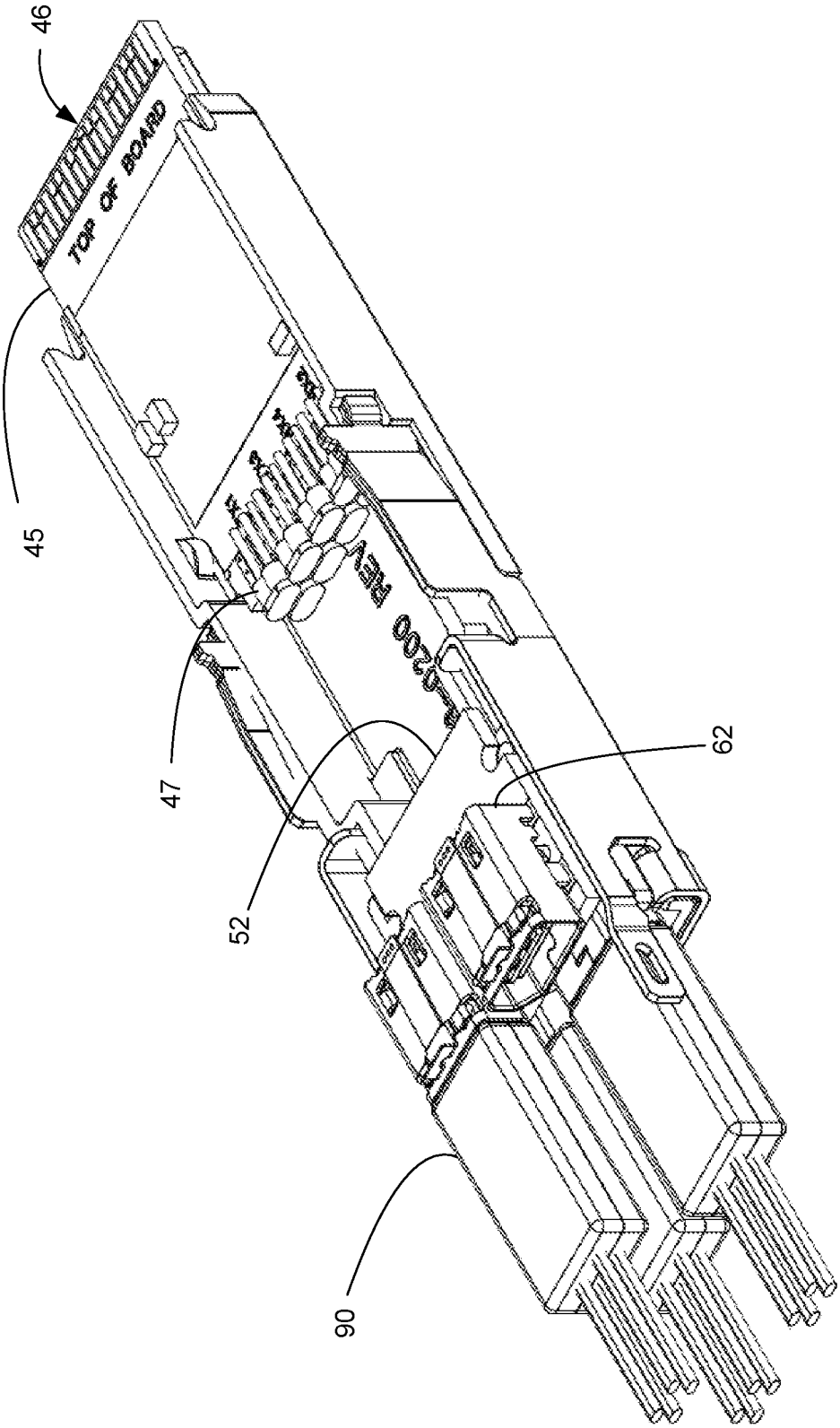

Fig. 5

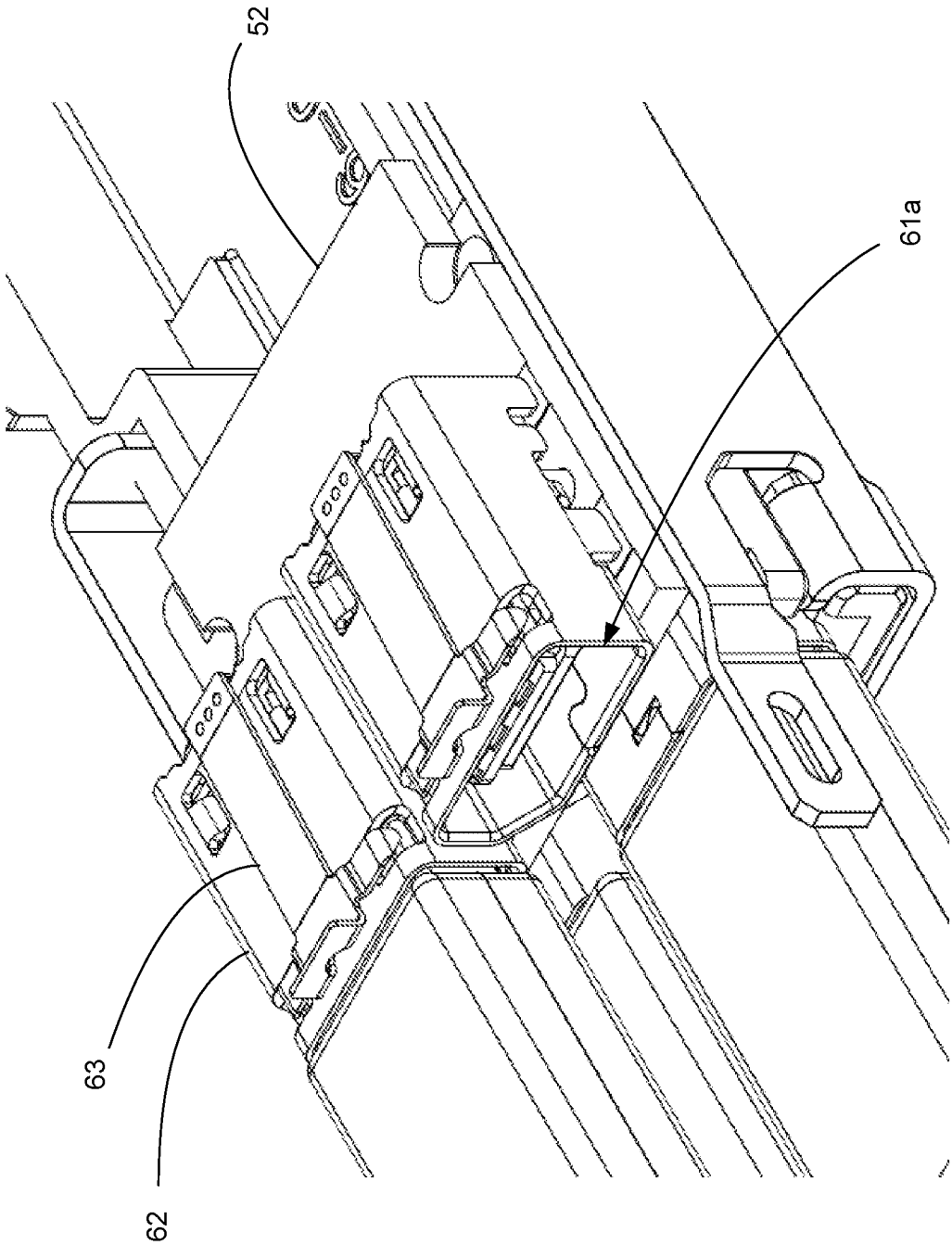

Fig. 6

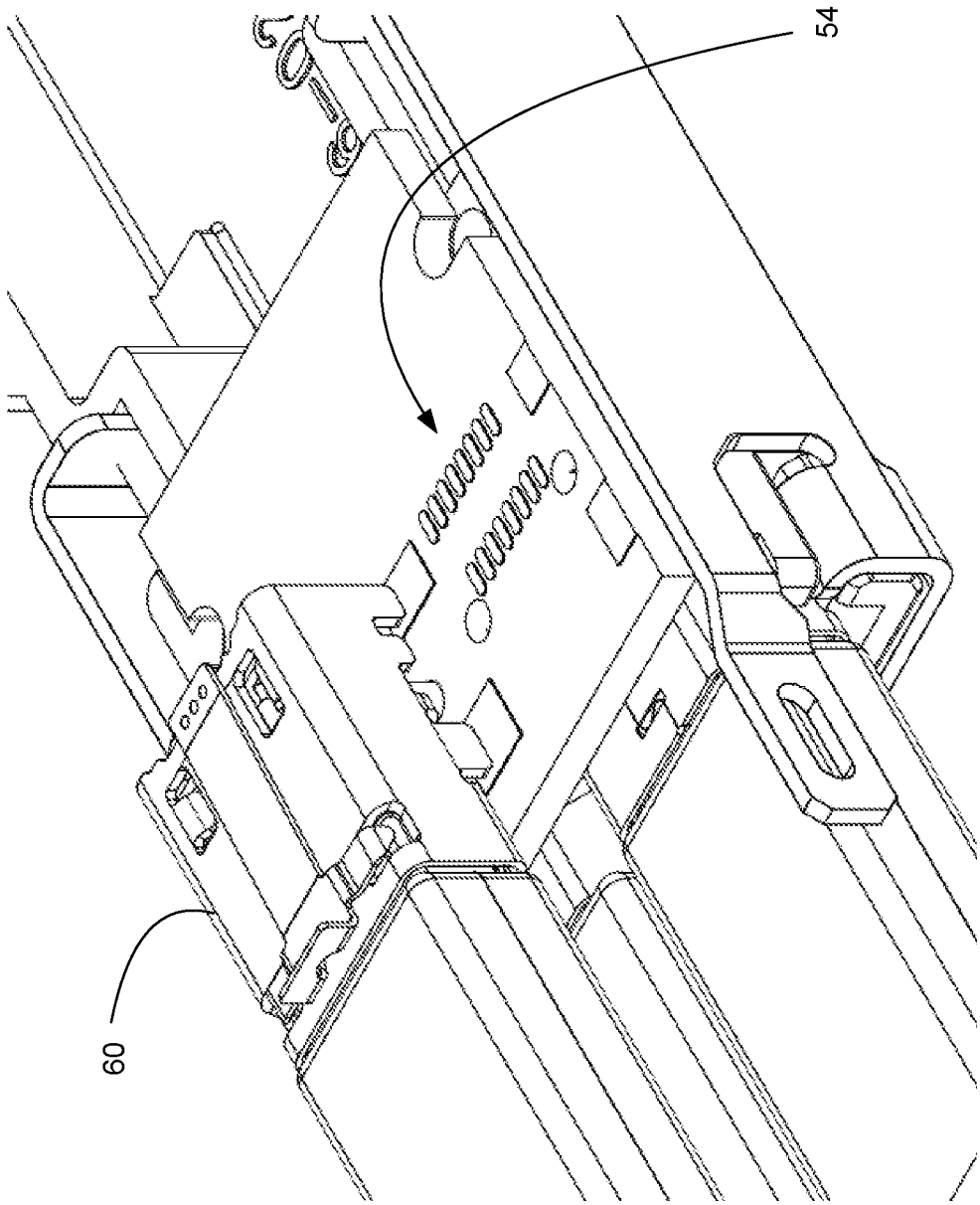

Fig. 7

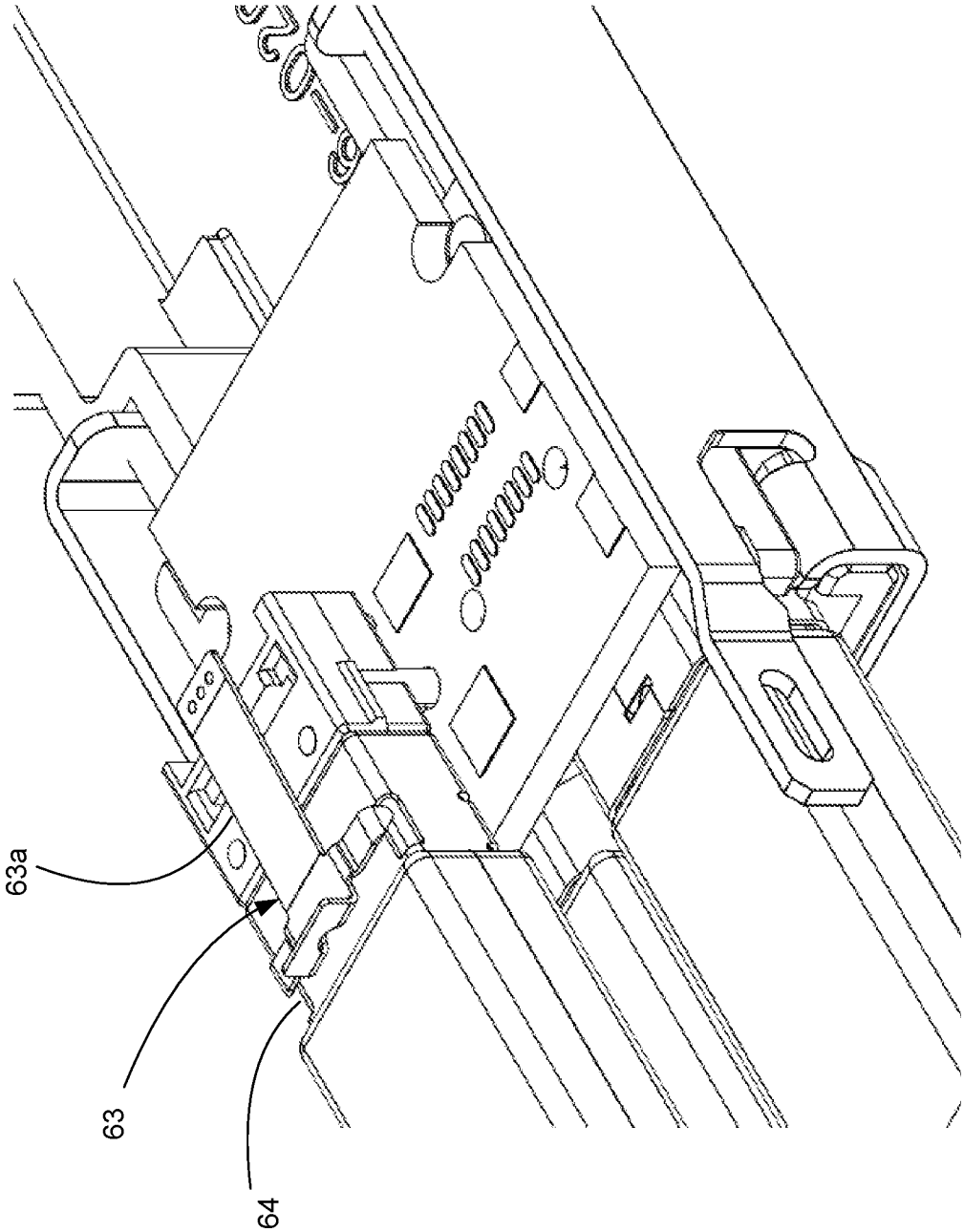

Fig. 8

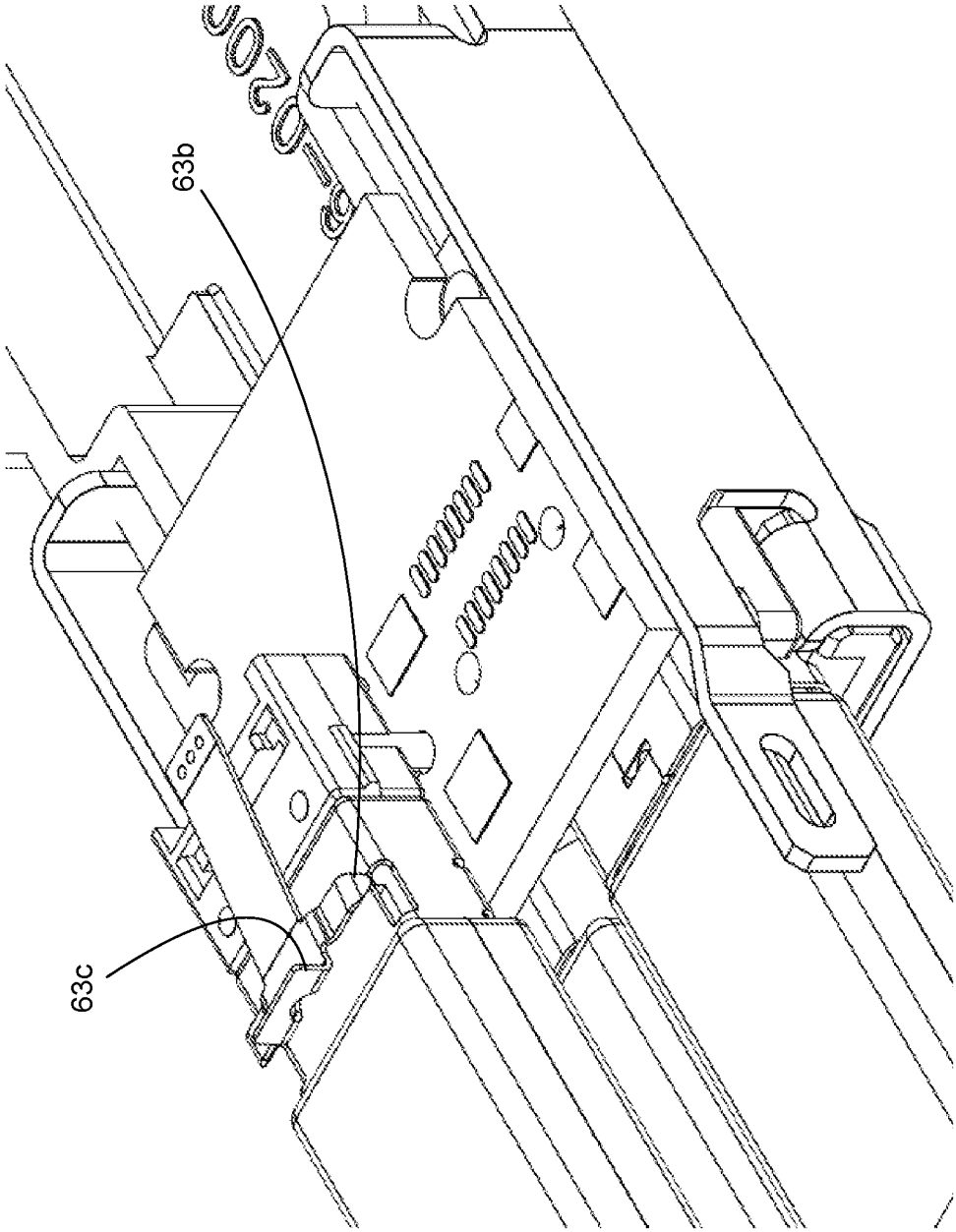

Fig. 9

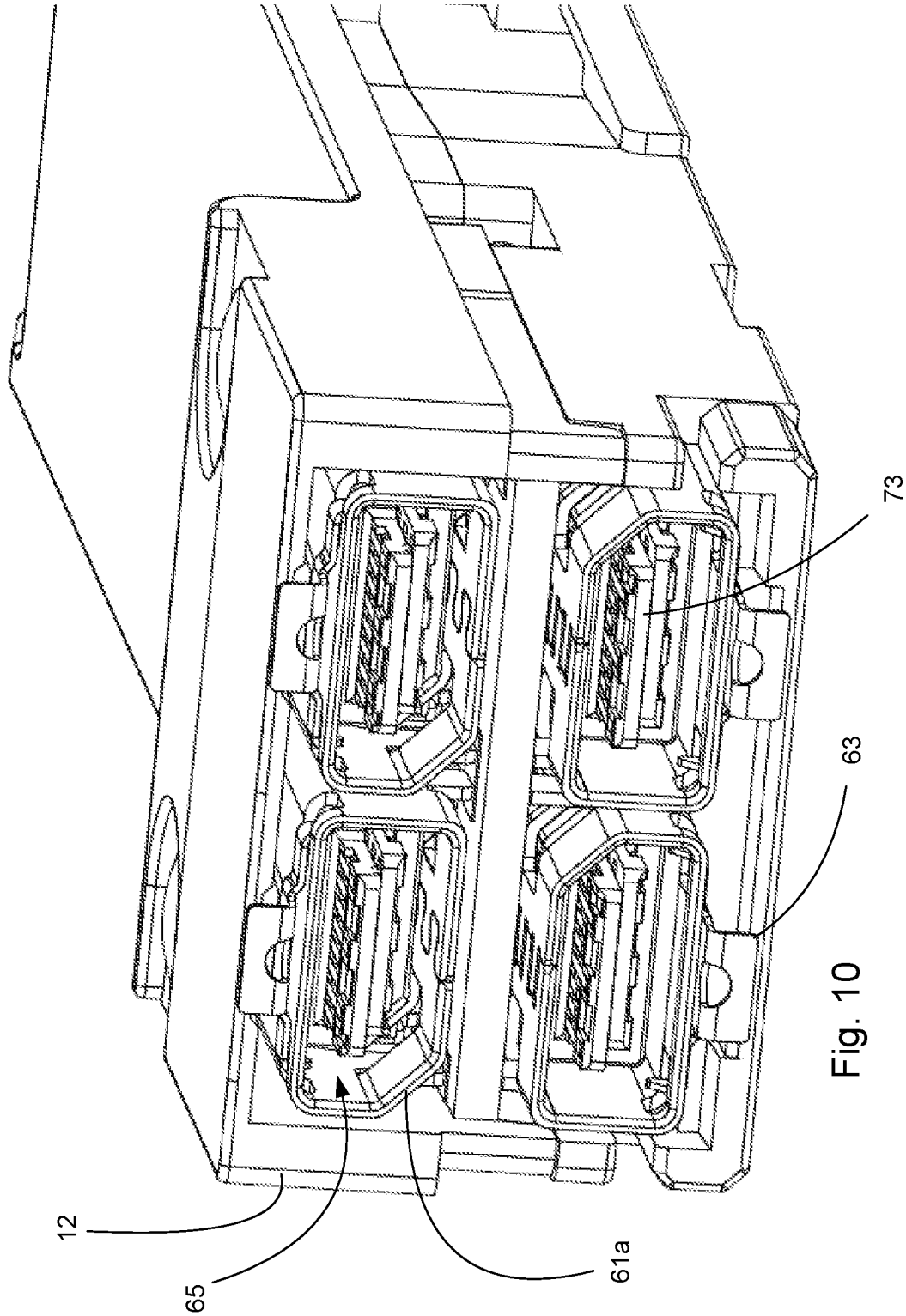

Fig. 10

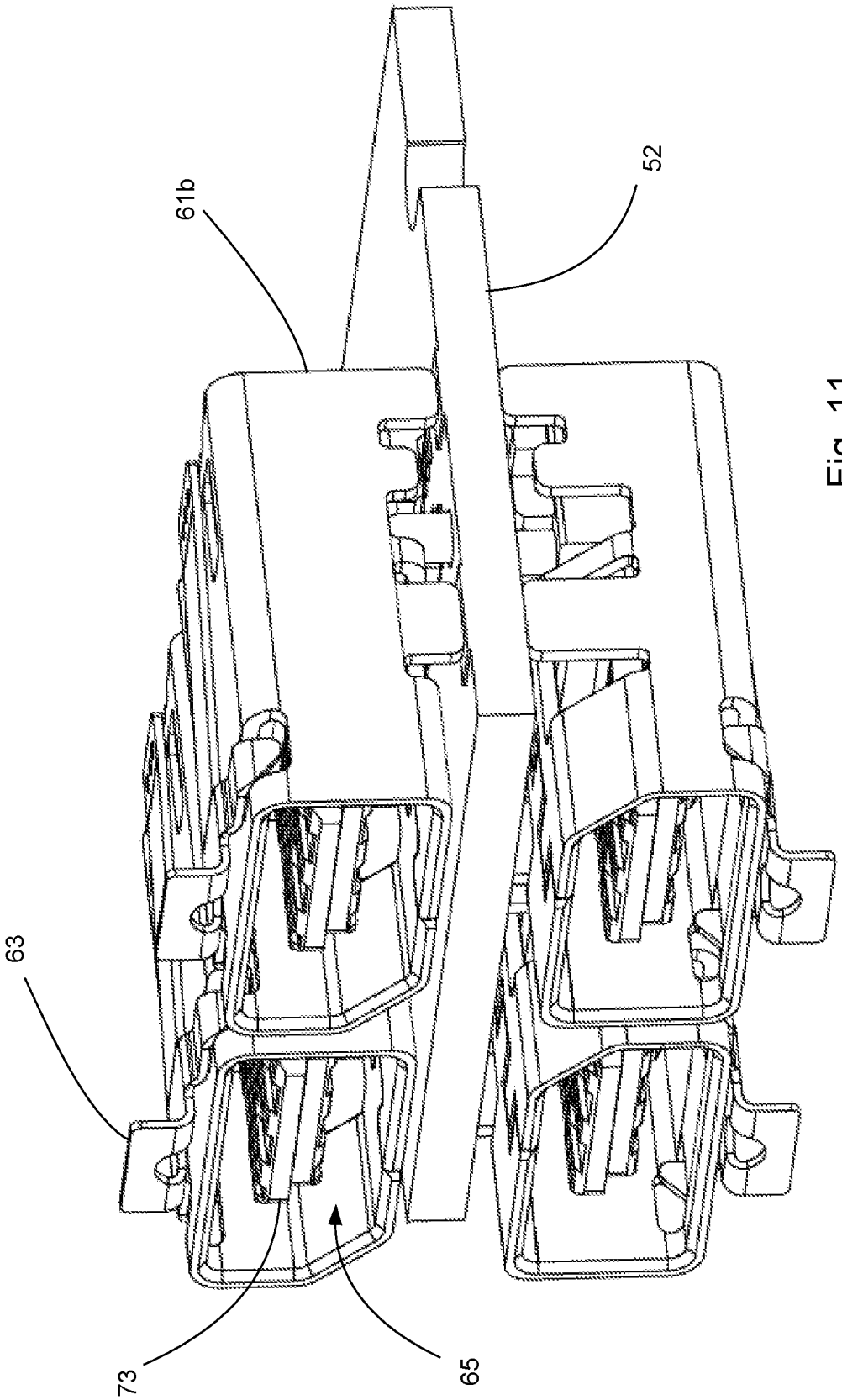

Fig. 11

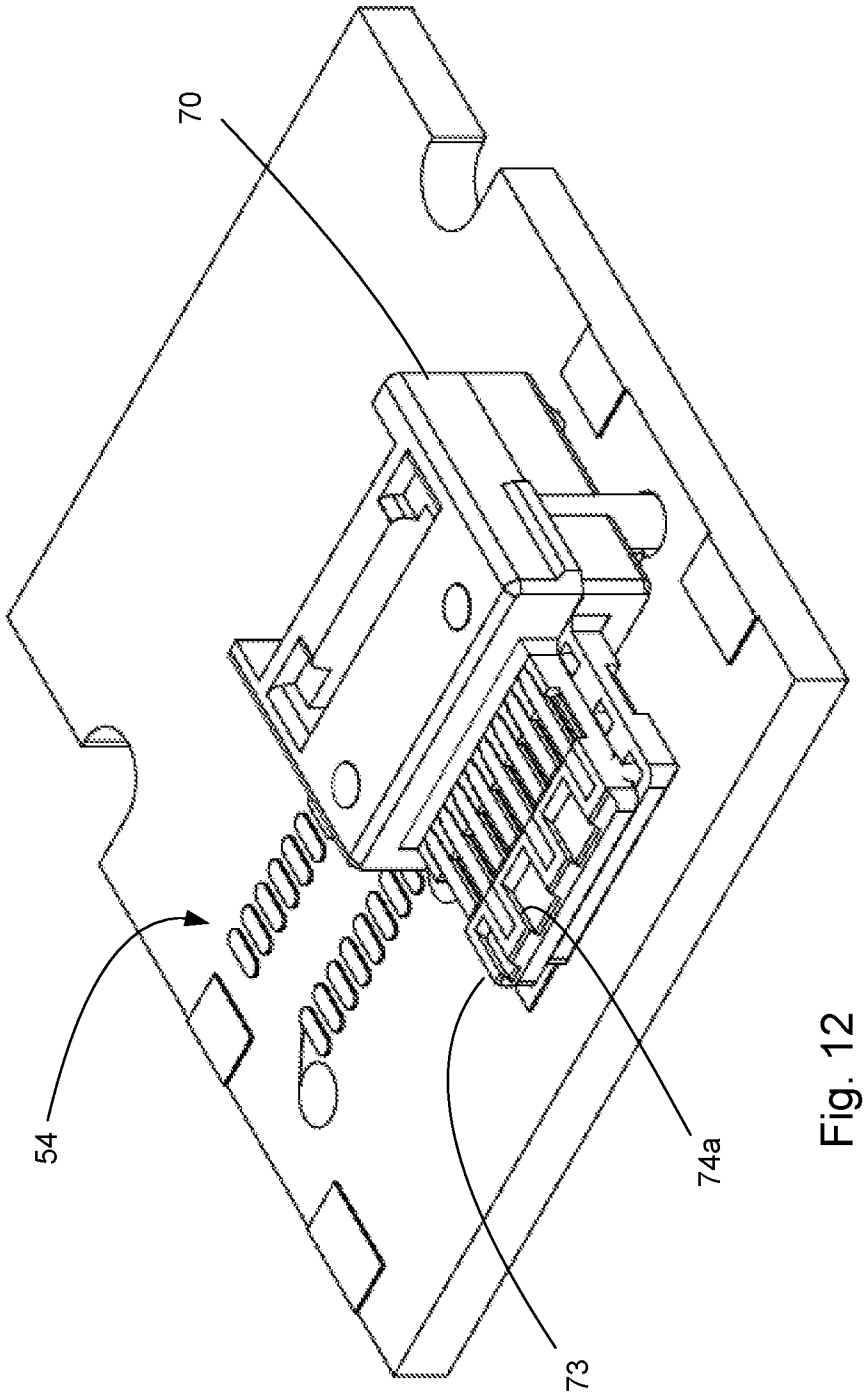

Fig. 12

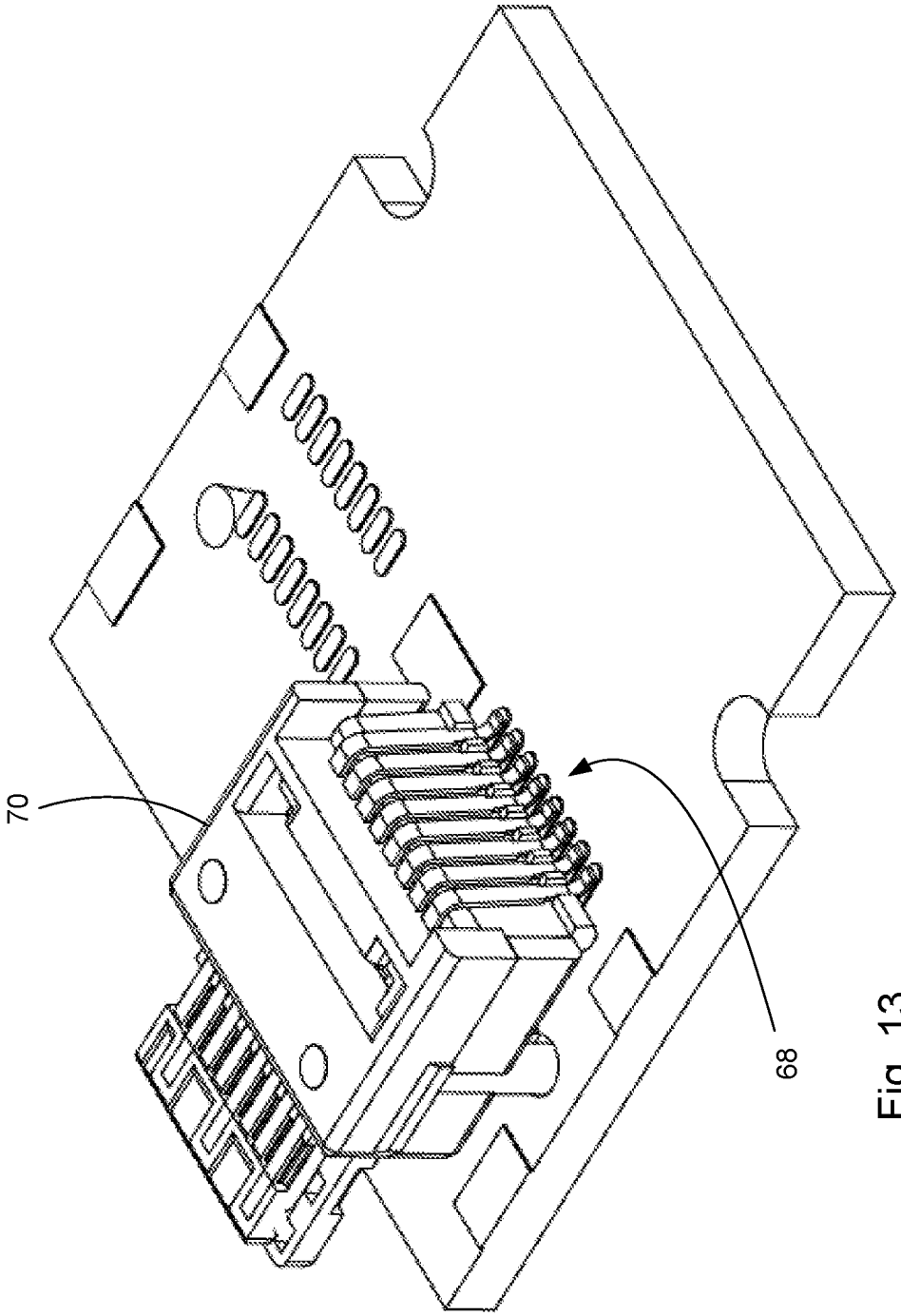

Fig. 13

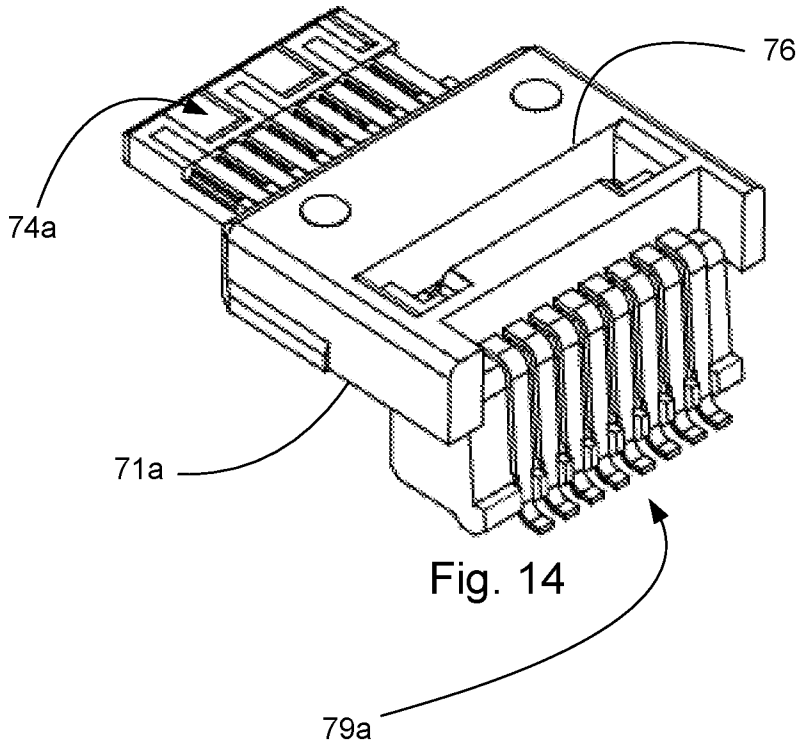

Fig. 14

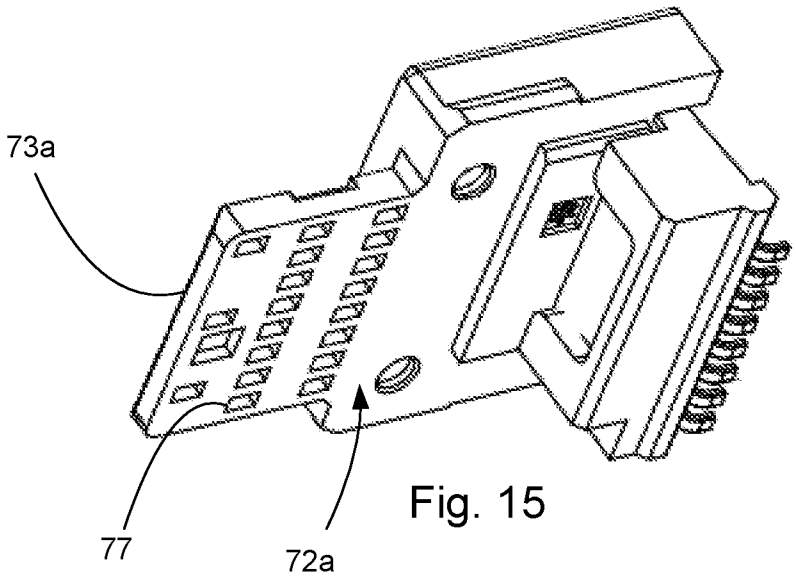

Fig. 15

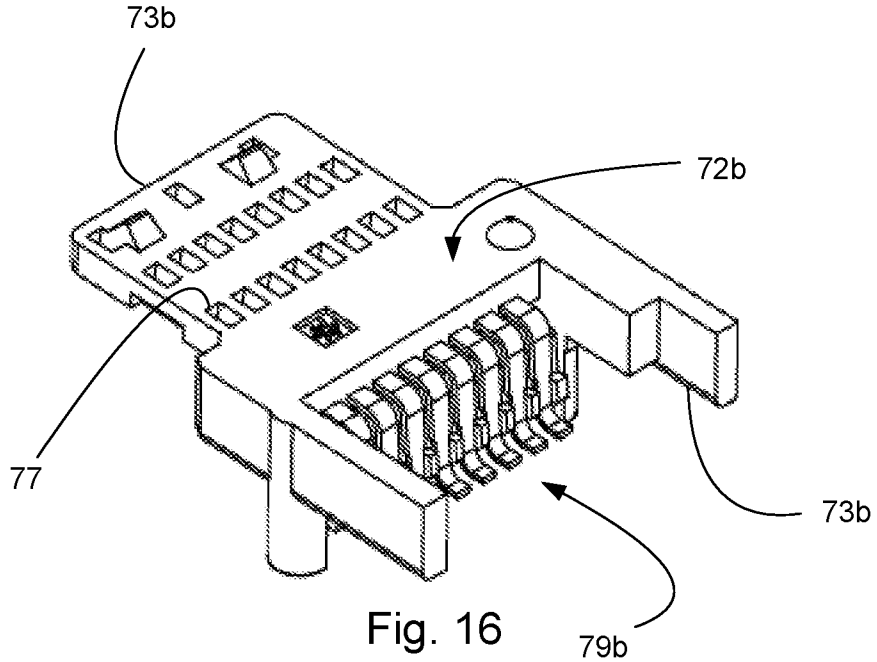

Fig. 16

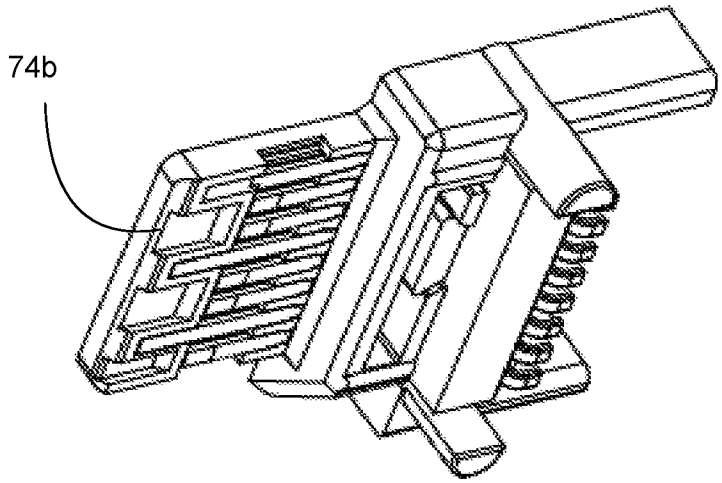

Fig. 17

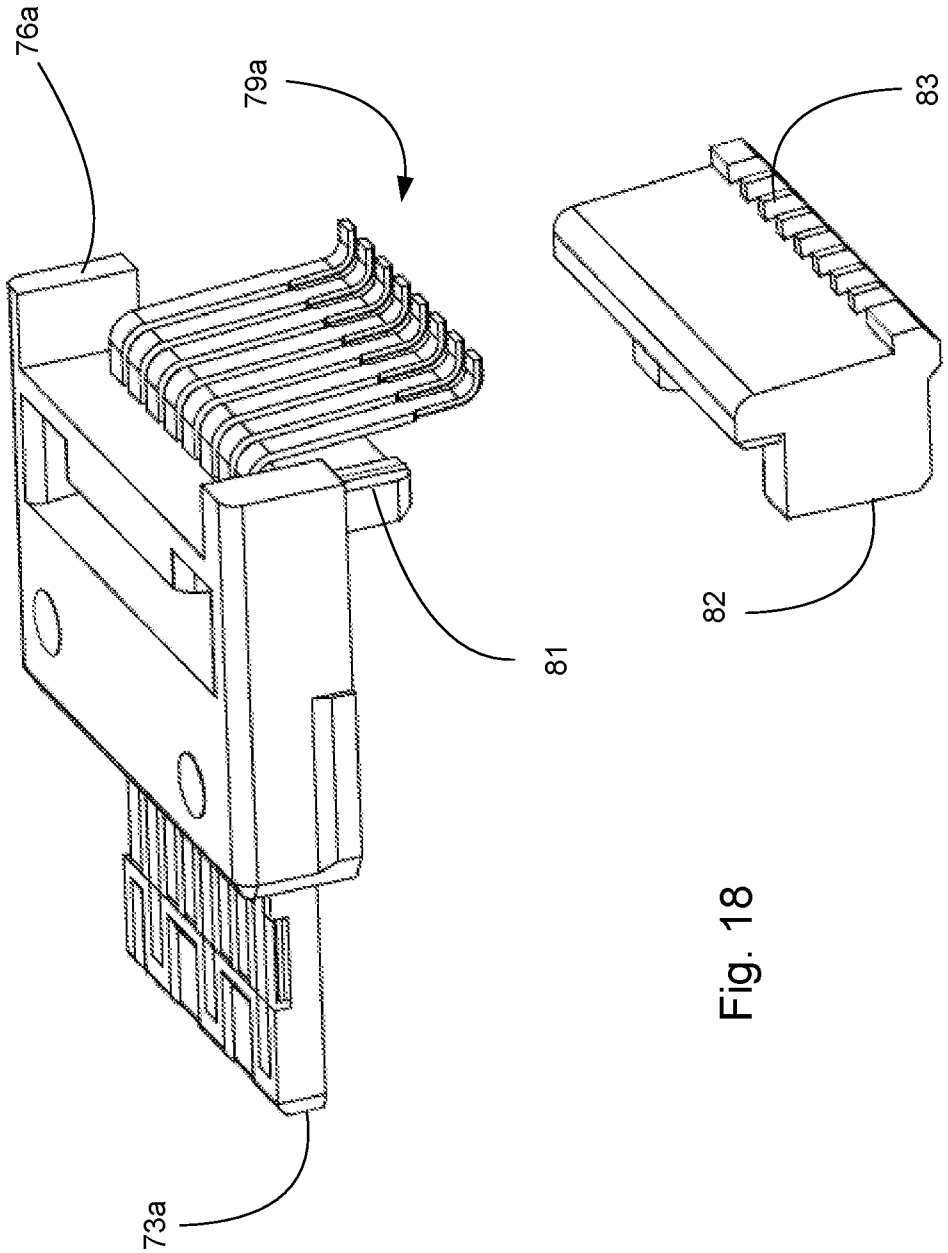

Fig. 18

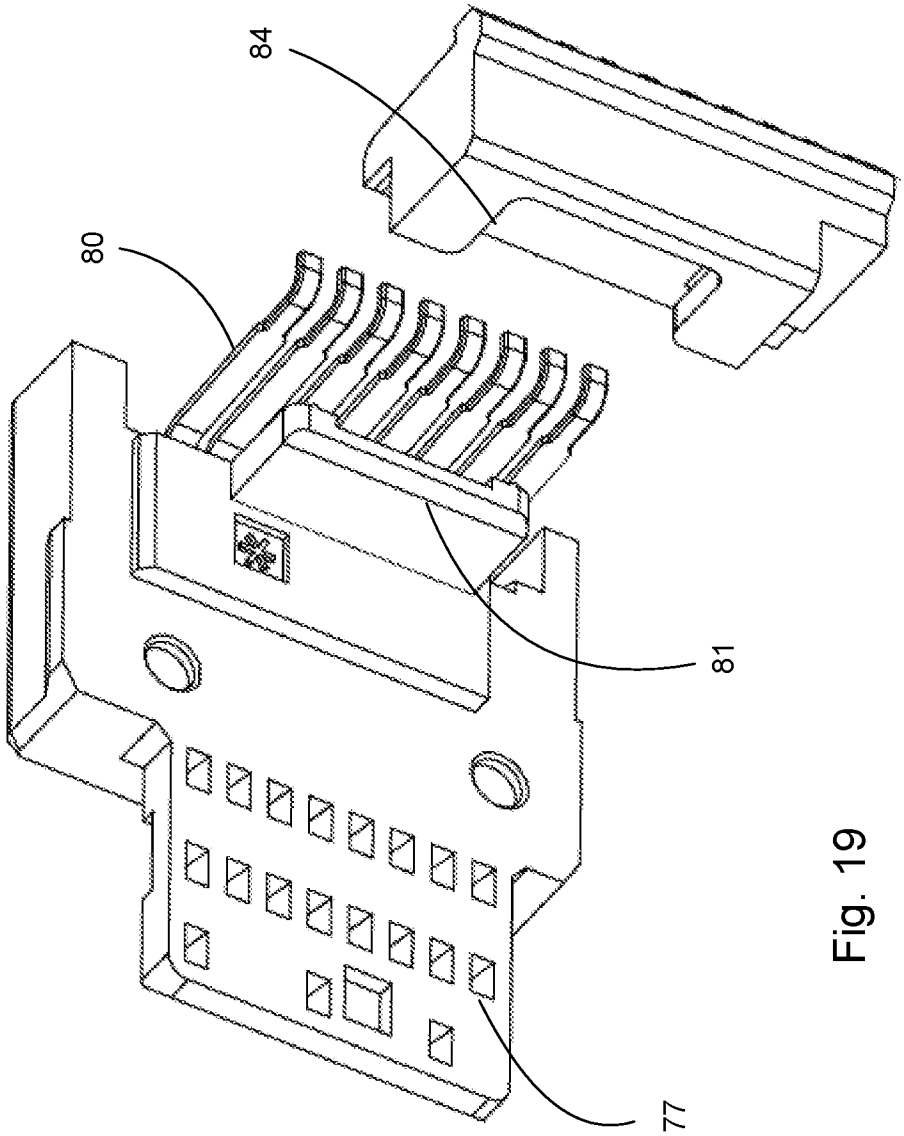

Fig. 19

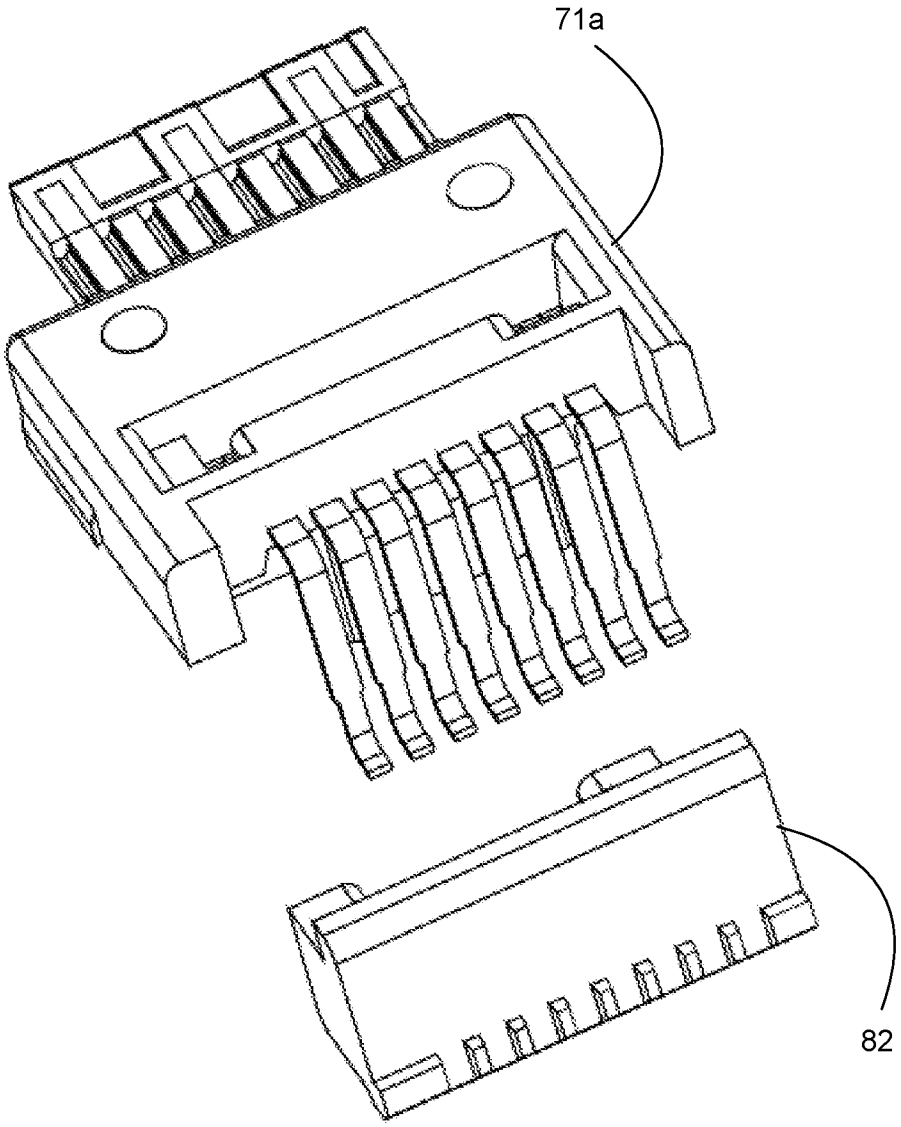

Fig. 20

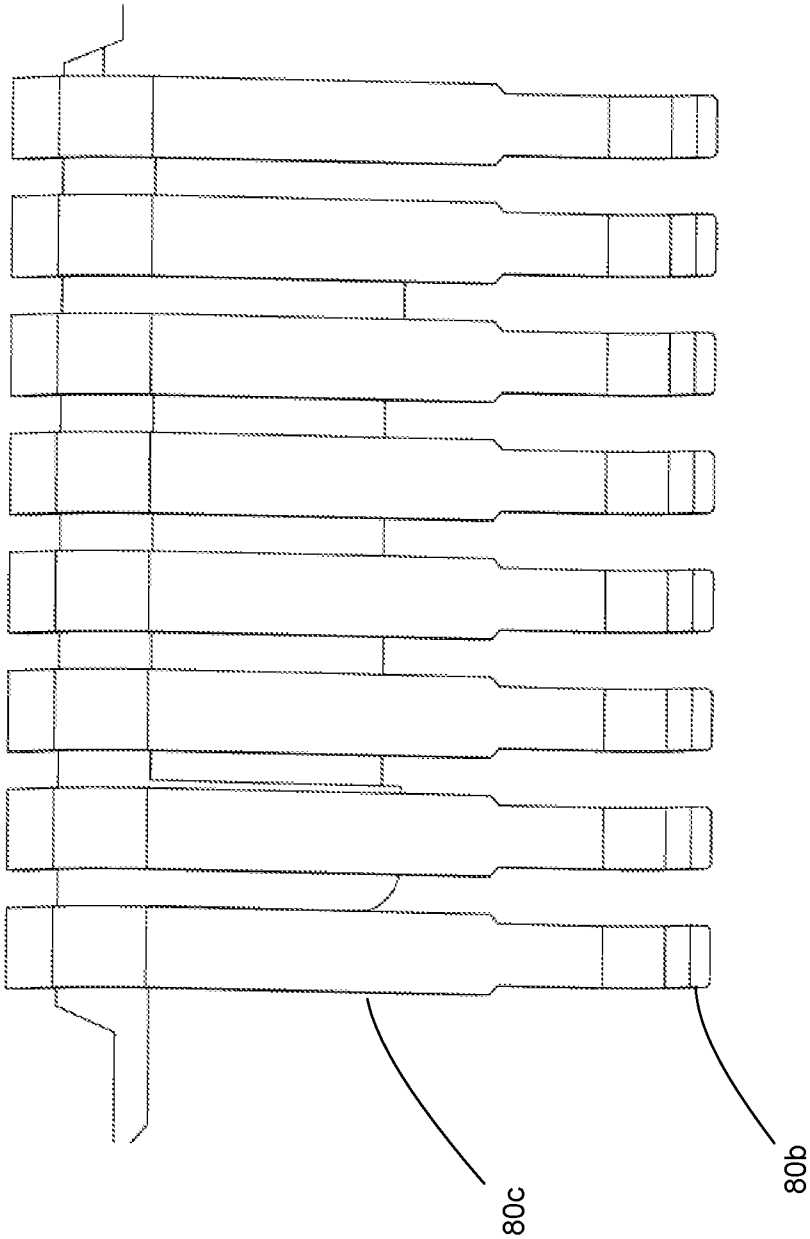

Fig. 21

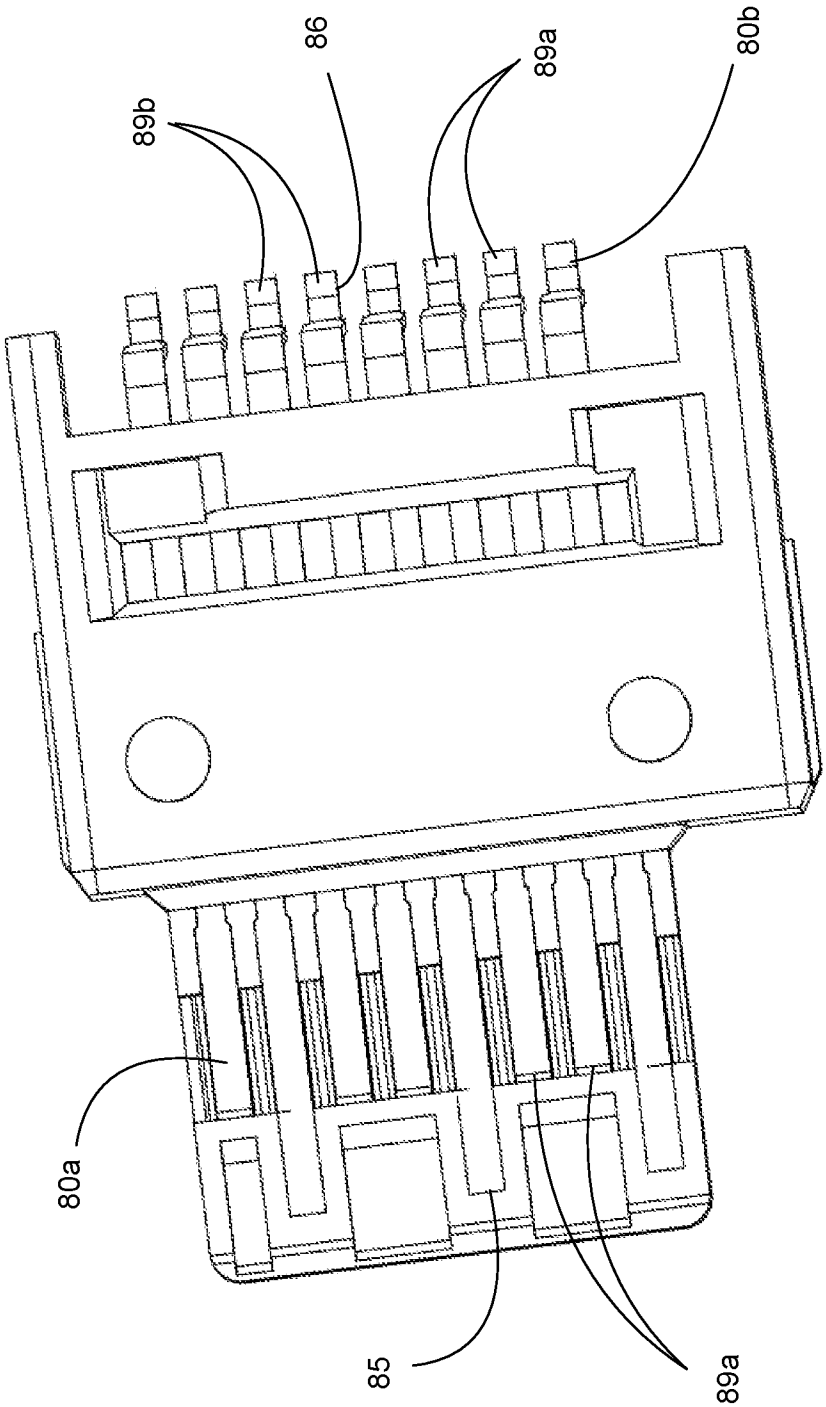

Fig. 22

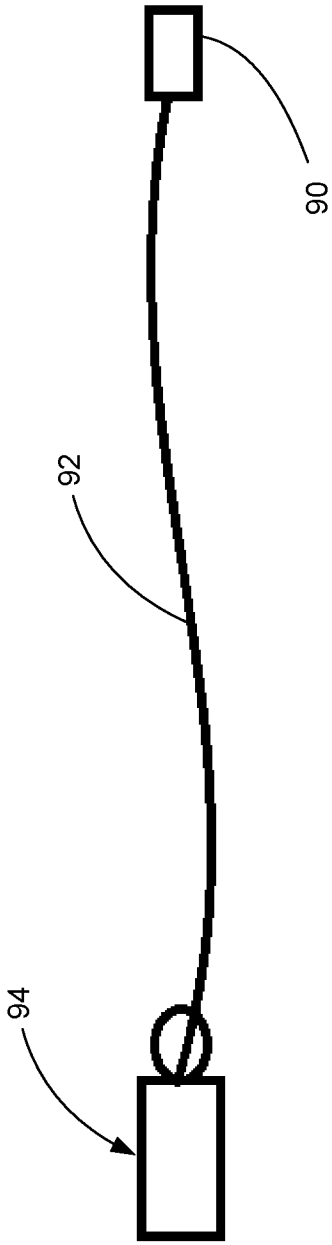

Fig. 23

INTERNATIONAL SEARCH REPORT

International application No.
PCT/US2016/015098

A. CLASSIFICATION OF SUBJECT MATTER

H01R 13/627(2006.01)i, G02B 6/42(2006.01)i

According to International Patent Classification (IPC) or to both national classification and IPC

B. FIELDS SEARCHED

Minimum documentation searched (classification system followed by classification symbols)
H01R 13/627; H01R 12/51; H01R 13/648; H01R 13/658; G02B 6/42

Documentation searched other than minimum documentation to the extent that such documents are included in the fields searched
Korean utility models and applications for utility models
Japanese utility models and applications for utility models

Electronic data base consulted during the international search (name of data base and, where practicable, search terms used)
eKOMPASS(KIPO internal) & Keywords: paddle, receptacle, channel, transmit, receive

C. DOCUMENTS CONSIDERED TO BE RELEVANT

Category*	Citation of document, with indication, where appropriate, of the relevant passages	Relevant to claim No.
X	WO 2014-113563 A1 (MOLEX INCORPORATED et al.) 24 July 2014 See paragraphs [0074]-[0086],[0101]-[0109], claims 1-10 and figures 16,44-45.	1-3
A	JP 2007-087877 A (FUJITSU COMPONENT LTD.) 05 April 2007 See paragraphs [0020]-[0035], claim 1 and figures 1-4.	1-3
A	US 2007-0049100 A1 (WEN-HSIEN TASI) 01 March 2007 See paragraphs [0022]-[0026], claim 1 and figures 1-4.	1-3
A	US 2013-0005178 A1 (FRANK M. STRAKA et al.) 03 January 2013 See paragraphs [0042]-[0052], claim 1 and figure 1.	1-3
A	US 2012-0220152 A1 (JERRY WU) 30 August 2012 See paragraphs [0020]-[0030], claim 1 and figures 1-3.	1-3

☐ Further documents are listed in the continuation of Box C. ☒ See patent family annex.

* Special categories of cited documents:
"A" document defining the general state of the art which is not considered to be of particular relevance
"E" earlier application or patent but published on or after the international filing date
"L" document which may throw doubts on priority claim(s) or which is cited to establish the publication date of another citation or other special reason (as specified)
"O" document referring to an oral disclosure, use, exhibition or other means
"P" document published prior to the international filing date but later than the priority date claimed
"T" later document published after the international filing date or priority date and not in conflict with the application but cited to understand the principle or theory underlying the invention
"X" document of particular relevance; the claimed invention cannot be considered novel or cannot be considered to involve an inventive step when the document is taken alone
"Y" document of particular relevance; the claimed invention cannot be considered to involve an inventive step when the document is combined with one or more other such documents,such combination being obvious to a person skilled in the art
"&" document member of the same patent family

Date of the actual completion of the international search	Date of mailing of the international search report
20 May 2016 (20.05.2016)	**23 May 2016 (23.05.2016)**

Name and mailing address of the ISA/KR	Authorized officer
International Application Division Korean Intellectual Property Office 189 Cheongsa-ro, Seo-gu, Daejeon, 35208, Republic of Korea	KIM, Sung Gon
Facsimile No. +82-42-481-8578	Telephone No. +82-42-481-8746

INTERNATIONAL SEARCH REPORT

International application No.
PCT/US2016/015098

Box No. II Observations where certain claims were found unsearchable (Continuation of item 2 of first sheet)

This international search report has not been established in respect of certain claims under Article 17(2)(a) for the following reasons:

1. ☐ Claims Nos.:
because they relate to subject matter not required to be searched by this Authority, namely:

2. ☒ Claims Nos.: 7-9
because they relate to parts of the international application that do not comply with the prescribed requirements to such an extent that no meaningful international search can be carried out, specifically:
Claims 7-9 were found unsearchable, because these claims refer to unsearchable multiple dependent claims, which are not drafted in accordance with the second (or third) sentence of PCT Rule 6.4(a).

3. ☒ Claims Nos.: 4-6
because they are dependent claims and are not drafted in accordance with the second and third sentences of Rule 6.4(a).

Box No. III Observations where unity of invention is lacking (Continuation of item 3 of first sheet)

This International Searching Authority found multiple inventions in this international application, as follows:

1. ☐ As all required addtional search fees were timely paid by the applicant, this international search report covers all searchable claims.

2. ☐ As all searchable claims could be searched without effort justifying an additional fees, this Authority did not invite payment of any additional fees.

3. ☐ As only some of the required additional search fees were timely paid by the applicant, this international search report covers only those claims for which fees were paid, specifically claims Nos.:

4. ☐ No required additional search fees were timely paid by the applicant. Consequently, this international search report is restricted to the invention first mentioned in the claims; it is covered by claims Nos.:

Remark on Protest

☐ The additional search fees were accompanied by the applicant's protest and, where applicable, the payment of a protest fee.
☐ The additional search fees were accompanied by the applicant's protest but the applicable protest fee was not paid within the time limit specified in the invitation.
☐ No protest accompanied the payment of additional search fees.

INTERNATIONAL SEARCH REPORT

Information on patent family members

International application No.

PCT/US2016/015098

Patent document cited in search report	Publication date	Patent family member(s)	Publication date
WO 2014-113563 A1	24/07/2014	CN 105247742 A	13/01/2016
		CN 105261855 A	20/01/2016
		JP 2016-027566 A	18/02/2016
		JP 2016-503954 A	08/02/2016
		TW 201444196 A	16/11/2014
		TW 201444203 A	16/11/2014
		US 2015-0288104 A1	08/10/2015
		US 2015-0333460 A1	19/11/2015
		US 2015-0364865 A1	17/12/2015
		WO 2014-113570 A1	24/07/2014
JP 2007-087877 A	05/04/2007	JP 4917784 B2	18/04/2012
		US 2007-0072457 A1	29/03/2007
		US 7438565 B2	21/10/2008
US 2007-0049100 A1	01/03/2007	US 7175465 B1	13/02/2007
US 2013-0005178 A1	03/01/2013	EP 2556564 A1	13/02/2013
		EP 2556564 B1	06/01/2016
		EP 2958192 A1	23/12/2015
		TW 201223029 A	01/06/2012
		US 2011-0250791 A1	13/10/2011
		US 8267718 B2	18/09/2012
		US 8632357 B2	21/01/2014
		WO 2011-126763 A1	13/10/2011
US 2012-0220152 A1	30/08/2012	CN 102651520 A	29/08/2012
		CN 102651520 B	29/10/2014
		US 8562373 B2	22/10/2013