W. D. SMITH.

ADVERTISING SIGN.

APPLICATION FILED MAR. 14, 1914.

1,116,942.

Patented Nov. 10, 1914.

2 SHEETS—SHEET 1.

Fig. 1.

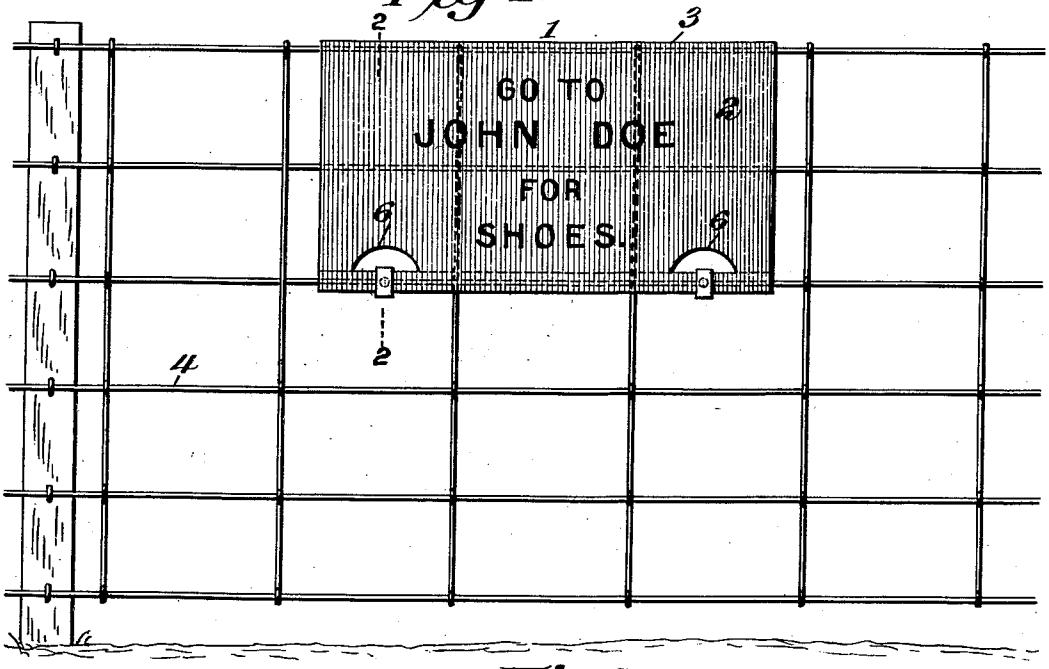

Fig. 2.

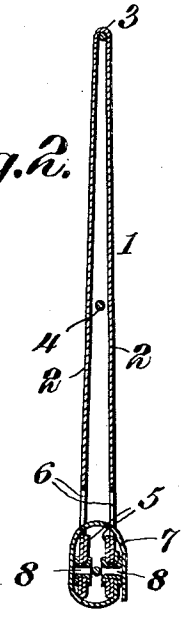

Fig. 3.

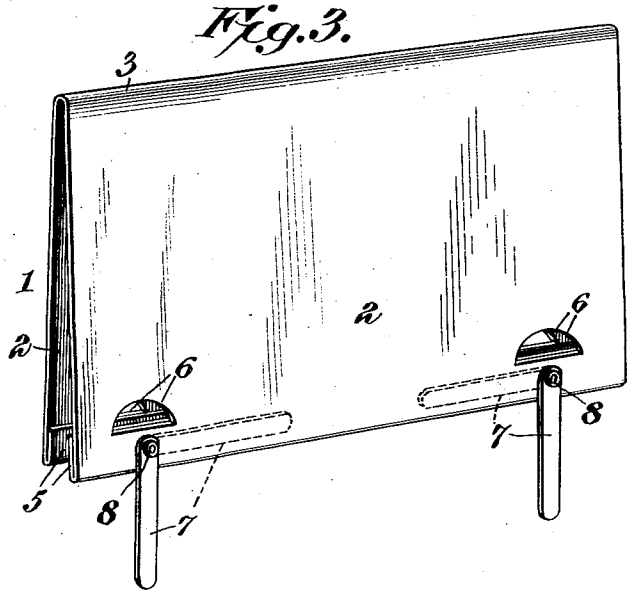

WITNESSES

Howard D. Orr.

H. J. Riley

Walton Duane Smith, INVENTOR,

BY E. L. Siggers.

ATTORNEY

W. D. SMITH.

ADVERTISING SIGN.

APPLICATION FILED MAR. 14, 1914.

1,116,942.

Patented Nov. 10, 1914.

2 SHEETS—SHEET 2.

Fig. 4.

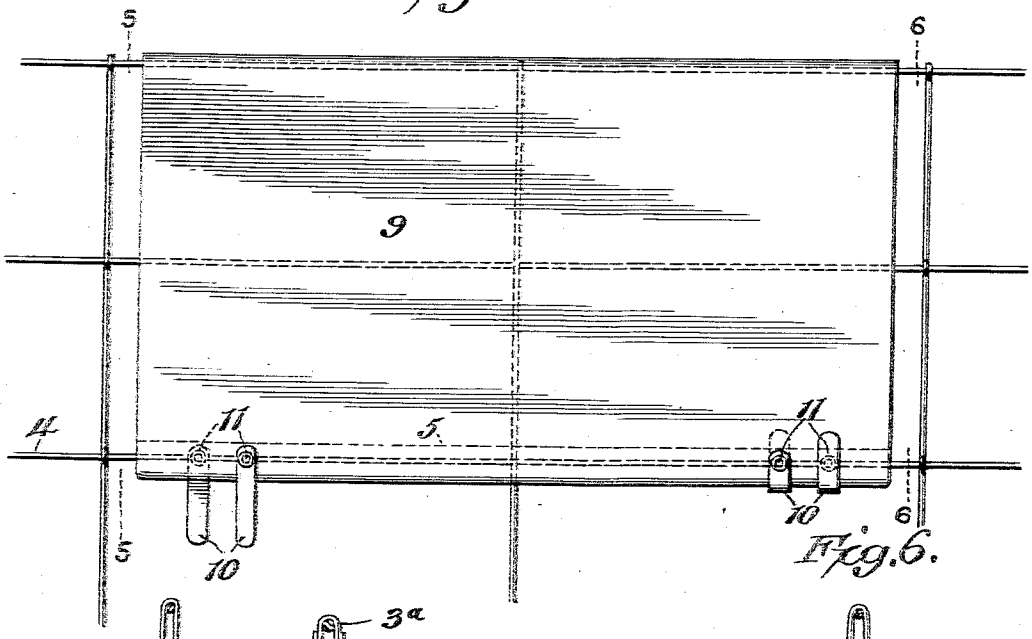

Fig. 6.

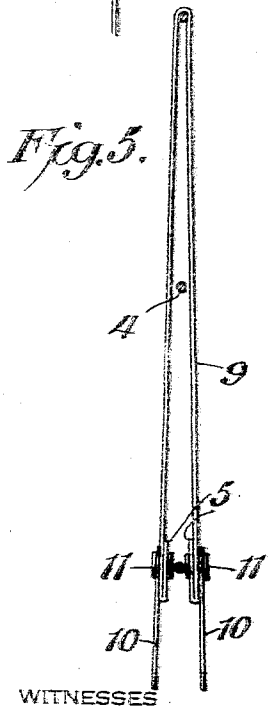

Fig. 5.

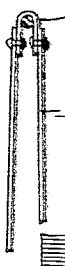

Fig. 8.

Fig. 7.

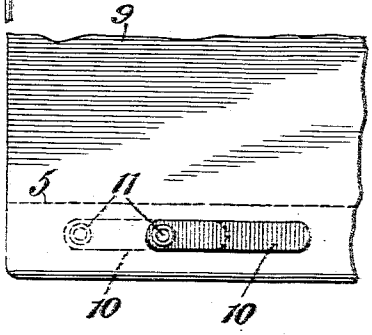

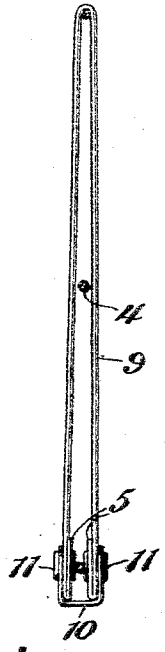

WITNESSES

Howard D. Orr.

H. F. Riley

Walton Duane Smith, INVENTOR,

BY E. G. Siggers.

ATTORNEY

UNITED STATES PATENT OFFICE.

WALTON DUANE SMITH, OF PROPHETSTOWN, ILLINOIS, ASSIGNOR OF ONE-THIRD TO WARNER S. HURLBERT AND ONE-THIRD TO CHARLES E. EMERY, BOTH OF PROPHETSTOWN, ILLINOIS.

ADVERTISING-SIGN.

1,116,942. Specification of Letters Patent. Patented Nov. 10, 1914.

Application filed March 14, 1914. Serial No. 824,719.

To all whom it may concern:

Be it known that I, WALTON DUANE SMITH, a citizen of the United States, residing at Prophetstown, in the county of Whiteside and State of Illinois, have invented a new and useful Advertising-Sign, of which the following is a specification.

The invention relates to improvements in advertising signs.

The object of the present invention is to improve the construction of signs and to provide a simple, efficient, and comparatively inexpensive sign, adapted to be easily and quickly applied to a wire fence, and equipped with means for displaying advertising matter at each side of the fence, so that such matter may be seen by persons working in a field, as well as those traveling over a road.

With these and other objects in view the invention consists in the construction and novel combination of parts hereinafter fully described, illustrated in the accompanying drawings, and pointed out in the claims hereto appended, it being understood that various changes in the form, proportion, size and minor details of construction, within the scope of the claims, may be resorted to without departing from the spirit or sacrificing any of the advantages of the invention.

In the drawings:—Figure 1 is an elevation of an advertising sign constructed in accordance with this invention, and shown applied to a wire fence. Fig. 2 is a vertical sectional view on the line 2—2 of Fig. 1. Fig. 3 is a perspective view of the sign, showing the same before being applied to a fence. Fig. 4 is an elevation of an advertising sign having another form of fastening means. Fig. 5 is a vertical sectional view on the line 5—5 of Fig. 4, showing the sign in end elevation, and the tongues before being bent into engagement with the leaves. Fig. 6 is a similar view on the line 6—6 of Fig. 4, showing the tongues bent in engagement with the leaves. Fig. 7 is a detail view of a portion of the sign, the tongues being folded or swung inwardly over the leaves. Fig. 8 is a sectional view of the upper portion of an advertising sign, showing another form of the invention.

Like numerals of reference designate corresponding parts in all the figures of the drawings.

The present invention, which is designed primarily for enabling a paper sign to be applied to a wire fence, comprises in its construction a sign 1 preferably constructed of a single sheet of flexible material, such as paper, folded or bent at the center to form two leaves 2, and a connecting bend 3 which is preferably arranged at the top of the sign. Instead of constructing the sign of a single piece of paper, it may be made of a single piece of any other flexible material, or of separate leaves 1^a and a top connecting portion 3^a, suitably secured to the said leaves 1^a, as clearly shown in Fig. 8 of the drawing. The leaves or members 2 are of the same size and are designed to be made of a size to enable the sign, when placed over or upon a wire fence 4, as illustrated in Figs. 1 and 4 of the drawings, to extend to one of the parallel line wires, so as to have the free edges of the leaves or members secured to such wire through the meshes or openings of the wire fence. The sign straddles the fence, and the bend or connecting portion 3 is arranged over the top wire of the fence and supports the sign thereon, and each of the leaves or members is designed to bear suitable advertising matter, so that the sign will be displayed to persons at each side of a wire fence. The leaves or members are reinforced at their lower free edges, preferably by folds 5 of the material, but separate reinforcing means may, of course, be employed.

The reinforced free edges of the leaves or members are designed to be secured together and to the adjacent line wire of the fence, and various fastening means may, of course, be employed for this purpose. In Figs. 1 to 3 of the drawings the leaves or members are provided with registering segmental openings 6 and are secured together by fastening devices 7 consisting of tongues secured at one end by rivets 8 or other suitable means to one of the leaves or members, and adapted to be bent around the free edges thereof and passed through the openings 6, as clearly illustrated in Fig. 2 of the drawings. Any number of the fastening devices may be employed, according to the size of the sign, and each tongue preferably consists of a thin narrow strip of sheet metal or other suitable material. The rivets 8 pivot the tongues to the sign and enable said tongues to be swung around over the leaves or mem-

bers, as illustrated in dotted lines in Fig. 3 of the drawings, to fold or arrange the tongues out of the way to facilitate printing the advertising matter on the signs, and storing or shipping the same.

In Fig. 4 of the drawings, the leaves or members of the sign 9 are secured together by fastening devices consisting of tongues 10 arranged in pairs and pivoted at one end to the leaves by rivets 11, and adapted to be bent in opposite directions around the free edges of the leaves or members, as clearly illustrated in Fig. 6 of the drawings. By this construction the free reinforced edges of the leaves or members are clamped together, and fastened to the adjacent line wire of a fence, and the said tongues are adapted to be folded or arranged over the leaves or members, as illustrated in Fig. 7 of the drawings.

The fastening means is adapted to enable a sign constructed of paper or other material to be easily and quickly applied to a wire fence, and the latter may thereby be utilized as a supporting means for an advertising medium. The sign may also be mounted in other places by means analogous to the spaced wires of a fence.

What is claimed is:

1. A sign for use on fences comprising a plurality of parallel horizontal wires, including two leaves or members and a connecting portion, said sign being adapted to straddle a fence wire with the leaves or members arranged at opposite sides of the fence, and being of a size to extend to another fence wire, and fastening means for connecting the free edges of the leaves or members, whereby the sign is secured in position.

2. A sign for use on fences comprising a plurality of parallel horizontal wires consisting of a single sheet of flexible material and composed of two leaves or members and a connecting portion, said sign being adapted to straddle a wire fence with the connecting portion arranged upon the top of the fence, and the leaves or members at opposite sides thereof said leaves or members being of a size to extend to one of the intermediate line wires of the fence, and fastening means for securing the sign in position.

3. A sign for use on fences comprising a plurality of parallel horizontal wires, composed of two leaves or members and a connecting portion adapted to straddle a fence wire and the said leaves or members being of a size to extend to another fence wire, and a fastening device for securing the free edges of the leaves or members together, said fastening device comprising a flexible tongue secured at one end to one of the leaves or members and adapted to be bent around the free edge of the other leaf or member.

4. A sign of the class described, composed of two leaves or members and a connecting portion, and a fastening device for securing the free edges of the leaves or members together, said fastening device comprising a flexible tongue pivoted at one end to one of the leaves or members and adapted to be bent around the free edge of the other leaf or member, said tongue being also adapted to be swung on its pivot to fold it within the periphery of the sign.

5. A sign of the class described, including two leaves or members and a connecting portion, said leaves or members being provided at their free edges with registering openings, and fastening means consisting of tongues located adjacent the said openings, each tongue being secured at one end to one of the leaves or members and arranged to be bent around the free edge of the other leaf or member and passed through the adjacent registering openings.

In testimony, that I claim the foregoing as my own, I have hereto affixed my signature in the presence of two witnesses.

WALTON DUANE SMITH.

Witnesses:

W. F. JOHNSON,

FRANK CLEAVELAND.