(12) UK Patent Application (19) GB (11) 2 103 045 A

(21) Application No **8123495**
(22) Date of filing **31 Jul 1981**
(43) Application published
9 Feb 1983
(51) **INT CL**[3]
G01S 3/78 A61B 3/00
(52) Domestic classification
H4D 247 710 730 733
761 782
U1S 1032 1058 H4D
(56) Documents cited
GB 1540992
GB 1492358
GB 1412707
GB 1410455
GB 1207861
GB 1175945
(58) Field of search
H4D
(71) Applicant
Omer Mohamed Abdel Gadir,
14 Granville Street,
Loughborough,
Leicestershire
(72) Inventor
Omer Mohamed Abdel Gadir

(54) **Microprocessor-based eye motion analysis system**

(57) A microprocessor-based video analysis system incorporates an interface to a T.V. camera, an edge detector, a 16-bit microprocessor system and interface circuitry to a data terminal and display devices. This system is used in conjunction with an oculometer to perform eye motion analysis.

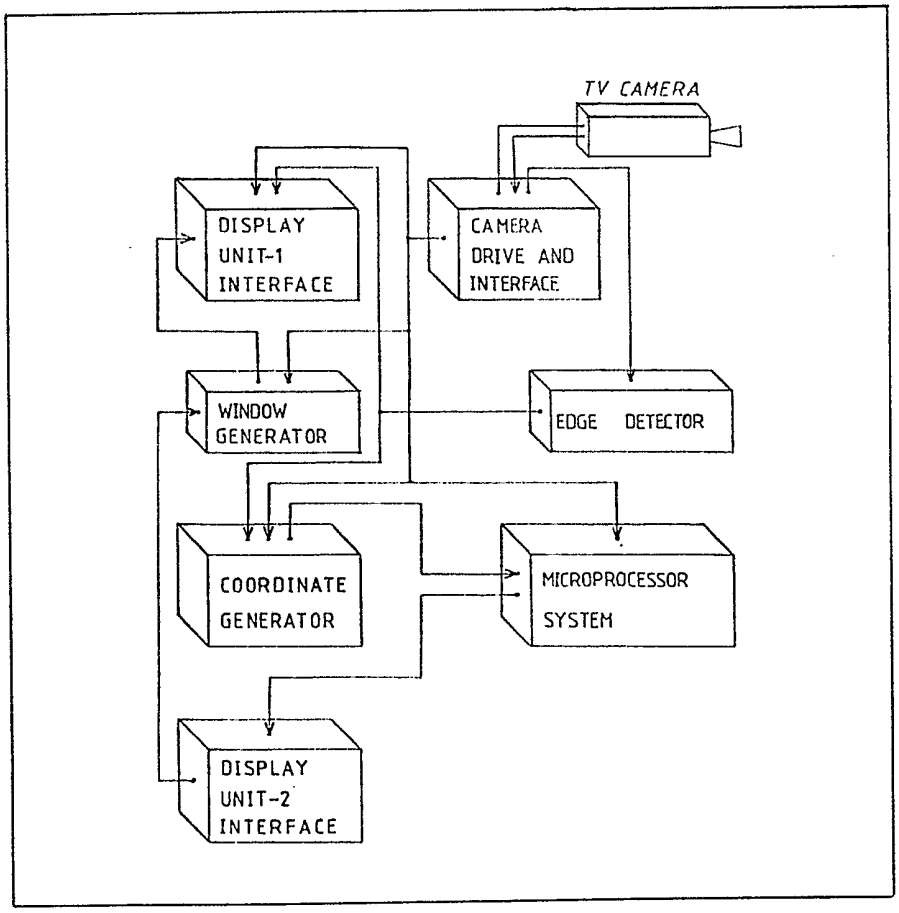

GB 2 103 045 A

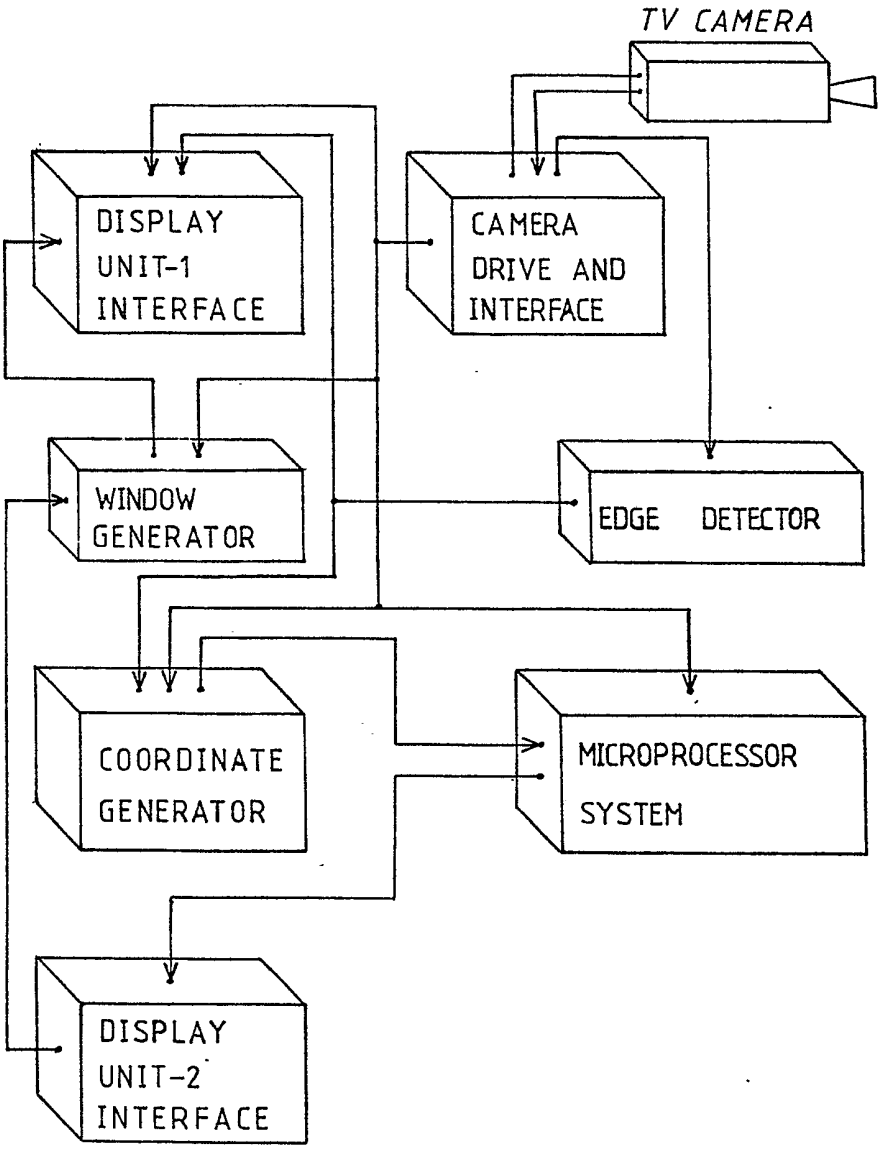
TV CAMERA
DISPLAY UNIT-1 INTERFACE
CAMERA DRIVE AND INTERFACE
WINDOW GENERATOR
EDGE DETECTOR
COORDINATE GENERATOR
MICROPROCESSOR SYSTEM
DISPLAY UNIT-2 INTERFACE

SPECIFICATION

A microprocessor-based system for eye motion analysis

INTRODUCTION

The human eye exercises different kinds of movements so as to place on the fovea that part of the total image about which the observer seeks a more detailed interpretation. Records of eye movements are useful in studies of human factors, visual representation of data and diagnosis of disturbances of the central nervous system as well as visual disorders.

So far, all real time eye motion analysis systems built by other workers incorporate the use of a mini-computer and hence are expensive and bulky. A microprocessor-based real time video analysis system (VAS) designed and constructed by the author, offers for the first time a cheap, portable and self-contained device for eye motion analysis. VAS is much cheaper than the existing systems and because of its small size it has a much wider range of research and industrial applications.

The eye sensing device used to monitor the eye movements is an oculumeter which tracks two elements of the eye detail, the pupillary disc and the corneal reflection. The displacement between the centre of the pupil and the corneal reflections gives a measure of the fixation point of a subject as it falls in space (point-of-regard). The output of the oculometer is a video image containing pertinent details of the eye and can be connected directly to VAS.

EMBODIMENTS

The eye of a subject is monitored by an oculometer which is connected to VAS. VAS detects the edges of the pupil and corneal reflections and uses these edges to determine the fixations point of a subjects eye.

The microprocessor collects the edges, calculates the point-of-regard and provides a visual display of results. Simultaneously the co-ordinates of displayed data are stored to provide a sequence of points which represent the time history of the point-of-regard for further processing. A set of interactive programs allows an experimenter to reduce the raw data to a form where its salient features can be evaluated, and to display eye scan patterns between original or processed fixation points. In addition VAS measures the diameter of the pupil in real-time.

VAS can be utilized in studies of vision, perception, television viewing, image scanning, novice training and effects of fatigue and drugs on impaired performance over time. Clinical and psychological applications include measurement of persuit and saccadic eye movements, nystagmus, measurement of vergence and muscular inbalance and correlation of voluntary and involuntary eye movements to physiological and psychological variables. VAS can be used in diagnosis of schizophrenia and various other neurological disorders which affect the eye movements and the pupil diameter. The on-line capabilities of VAS can easily be used simultaneously to collect data on physiological parameters such as heart rate, electroencephalogram (EEG) as well as data on motor responses such as reaction time. Other applications of VAS is in reading analysis and diagnosis of learning disabilities, for instance dyslexia. VAS can also be used in the testing of visual acuity and in training people suffering from learning disabilities.

From a psychological and a human factors perspective problems related to an operator's ability to acquire, process and apply information can be investigated using VAS. This includes the study of sensory mechanisms motor skill performance, emotional reactivity, physical capabilities, indices of general health, reaction to stress and physiological indices of psychological stress which are important for determining normal operator-performance capabilities as well as for understanding the effects and magnitude of performance decrements due to fatigue, alcohol, drugs and emotional stress, etc. Study of the man/machine interaction can be performed in a vehicle, aeroplane, factory, etc., to obtain results under natural conditions.

PRINCIPLES OF OPERATION:—

The design VAS can be described in terms of the block diagram of Fig. 1. The system consists of:

(1) TV camera drive and interface
(2) Edge detector
(3) Co-ordinate generator
(4) Microprocessor system
(5) Window generator
(6) Display Unit-1 interface
(7) Display Unit-2 interface.

The camera drive and interfaces a T.V. camera to the edge detector and supplied synchronising pulses to other parts of VAS.

A new edge detection procedure which allows for interactions to take place among spatial differentials at neighbouring pixels has been developed and built as a hardware processor. This procedure utilises the serial nature of the image formation and evaluates spatial differentials at each pixel of the incoming video signal. The spatial differenation involved is basically a difference operation in which a value of a pixel is subtracted from the preceeding one.

As the differentials are evaluated a decision procedure utilizing differentials at 3 adjacent pixels and the relationship between them is executed to extract edges. The decision procedure is a combination of a number of logical AND functions which are formulated from the following variables:—

1) signs of derivates.

2) variables obtained by comparing the magnitude of the differential at the centre pixel with those at adjacent pixels on both sides of the central one.

3) result of thresholding the differential at the centre.

Assuming D_l, D_c, D_r represent the absolute values of differentials at the left, centre and right pixel respectively, and T is the magnitude of the threshold, then the variables from which the AND functions are formulated are defined as follows:

b is true if $D_c \geqslant T$
c is true if $D_c \geqslant D_r$
d is true if $D_c \geqslant D_l$
p_1 is true if D_r is positive
p_2 is true if D_c is positive
P_3 is true is D_l is positive
s_1 is true if D_r is negative
s_2 is true if D_c is negative
s_3 is true if D_l is negative

A positive going edge exists whenever one of the products shown below is true.

AND functions	signs of differentials
$b.c.d.p_1.p_2.p_3$	+ + +
$b.s_1.p_2.s_3$	− + −
$b.s_1.p_2.p_3$	− + +
$b.p_1.p_2.s_3$	+ + −
$b.c.d.(\overline{s_1+p_1}).p_2.(\overline{s_3+p_3})$	0 + 0
$b.c.d.p_1.p_2.(\overline{s_3+p_3})$	+ + 0
$b.c.d.(\overline{s_1+p_1}).p_2.p_3$	0 + +
$b.c.d.(\overline{s_1+p_1}).p_2.s_3$	0 + −
$b.c.d.s_1.p_2.(\overline{s_1+p_3})$	− + 0

A similar table can be drawn for negative going edges.

The decision procedure extracts edges and at the same time performs a thinning operation. For instance when consecutive differentials are all positive and above the threshold value the edge point obtained lies at the pixel location where are differential is greater than adjacent ones.

The output of the edge detector is dependent on three parameters: the level of the video signal, the level of the reference voltage of the analogue-to-digital converter feeding the edge detector and the magnitude of the threshold T. The first two parameters determine the position of the quantising levels on the dynamic range of video signal. Since only the information pertaining to the part of the video signal between the top and bottom quantum levels is available for the edge detector, the whole dynamic range of the signal or any smaller part of it can be processed.

The output of the edge detector is routed to the microprocessor system via the co-ordinate generator and interface circuitry. The co-ordinate generator includes counters for the generator of x- and y- condinates of the edge points and buffers to ensure reliable transfer of co-ordinates from the counters to the microprocessor system. The display unit-2 interface is responsible for data transfer from the microprocessor to a storage oscilloscope or a raster scan computer graphics display terminal used to display results. The window generator is used to blacken the whole raster except for a rectangular area whose size and location can be varied by the operator. The window can be used to exclude parts of the video image which are irrelevant for processing. The display unti-1 feeds a T.V. monitor used to display the edges of video images extracted by VAS.

CLAIM

1. The design of a microprocessor-based system for eye motion analysis in which a novel edge detection procedure is implemented. This procedure allows for interactions to take place among spatial differentials at neighbouring pixels and has been developed and built as a hardware processor. This procedure utilises the serial nature of the image formation and evaluates spatial differentials at each pixel of the incoming video signal. The spatial differentiation involved is basically a difference in which a value of a pixel is subtracted from the preceding one.

As the differentials are evaluated a decision procedure utilizing differentials at 3 adjacent pixels and the relationship between them is executed to extract edges. The decision procedure is a combination of a number of logical AND functions which are formulated from the following variables:—

1) signs of derivatives

2) variables obtained by comparing the magnitude of the differential at the centre pixel with those at adjacent pixels on both sides of the central one.

3) result of thresholding the differential at the centre.

Assuming D_l, D_c, D_r represent the absolute values of differentials at the left, centre and right pixel respectively, and T is the magnitude of the threshold, then the variables from which the AND functions are formulated are defined as follows:

b is true if $D_c \geqslant T$
c is true if $D_c \geqslant D_r$
d is true if $D_c \geqslant D_l$
p_1 is true if D_r is positive
p_2 is true if D_c is positive
P_3 is true if D_l is positive
s_1 is true if D_r is negative
s_2 is ture if D_c is negative
se_3 is true if D_l is negative

A positive going edge exists whenever one of the products shown below is true.

AND functions	signs of differentials
$b.c.d.p_1.p_2.p_3$	+ + +
$b.s_1.p_2.s_3$	− + −
$b.s_1.p_2.p_3$	− + +
$b.p_1.p_2.s_3$	+ + −
$b.c.d.(\overline{s_1+p_1}).p_2.(\overline{s_3+p_3})$	0 + 0
$b.c.d.p_1.p_2.(\overline{s_3+p_3})$	+ + 0
$b.c.d.(\overline{s_1+p_1}).p_2.p_3$	0 + +
$b.c.d.(\overline{s_1+p_1}).p_2.s_3$	0 + −
$b.c.d.s_1.p_2.(\overline{s_1+p_3})$	− + 0

A similar table can be drawn for negative going edges.

Printed for Her Majesty's Stationery Office by the Courier Press, Leamington Spa, 1983. Published by the Patent Office, 25 Southampton Buildings, London, WC2A 1AY, from which copies may be obtained.