Office de la Propriété Intellectuelle du Canada
Un organisme d'Industrie Canada

Canadian Intellectual Property Office
An agency of Industry Canada

CA 2215056 C 2009/02/10

(11)(21) 2 215 056

(12) BREVET CANADIEN
CANADIAN PATENT

(13) C

(86) Date de dépôt PCT/PCT Filing Date: 1996/03/15
(87) Date publication PCT/PCT Publication Date: 1996/09/19
(45) Date de délivrance/Issue Date: 2009/02/10
(85) Entrée phase nationale/National Entry: 1997/09/10
(86) N° demande PCT/PCT Application No.: US 1996/003498
(87) N° publication PCT/PCT Publication No.: 1996/028129
(30) Priorité/Priority: 1995/03/15 (US404,442)

(51) Cl.Int./Int.Cl. *A61H 31/00* (2006.01),
A61H 31/02 (2006.01)

(72) Inventeurs/Inventors:
GELFAND, MARK, US;
GRUBEN, KREG GEORGE, US;
HALPERIN, HENRY, US;
KEOPSELL, JEFFREY D., US;
ROTHMAN, NEIL S., US;
TSITLIK, JOSHUA E., US

(73) Propriétaires/Owners:
CARDIOLOGIC SYSTEMS, INC., US;
JOHNS HOPKINS UNIVERSITY, US

(74) Agent: BERESKIN & PARR

(54) Titre : CONCEPT DE GILET AMELIORE POUR SYSTEME DE REANIMATION CARDIO-PULMONAIRE
(54) Title: IMPROVED VEST DESIGN FOR A CARDIOPULMONARY RESUSCITATION SYSTEM

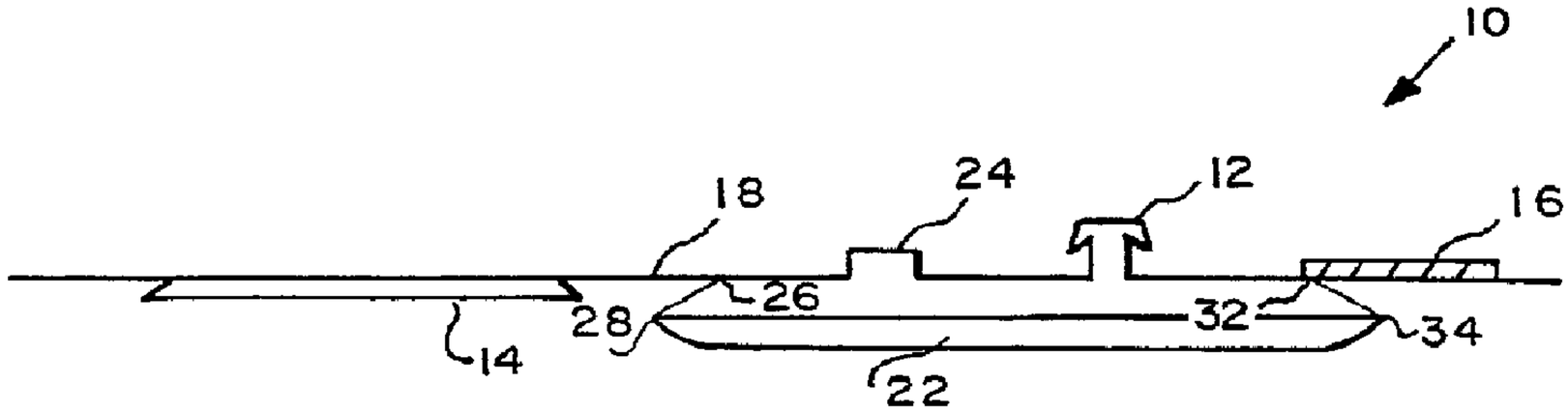

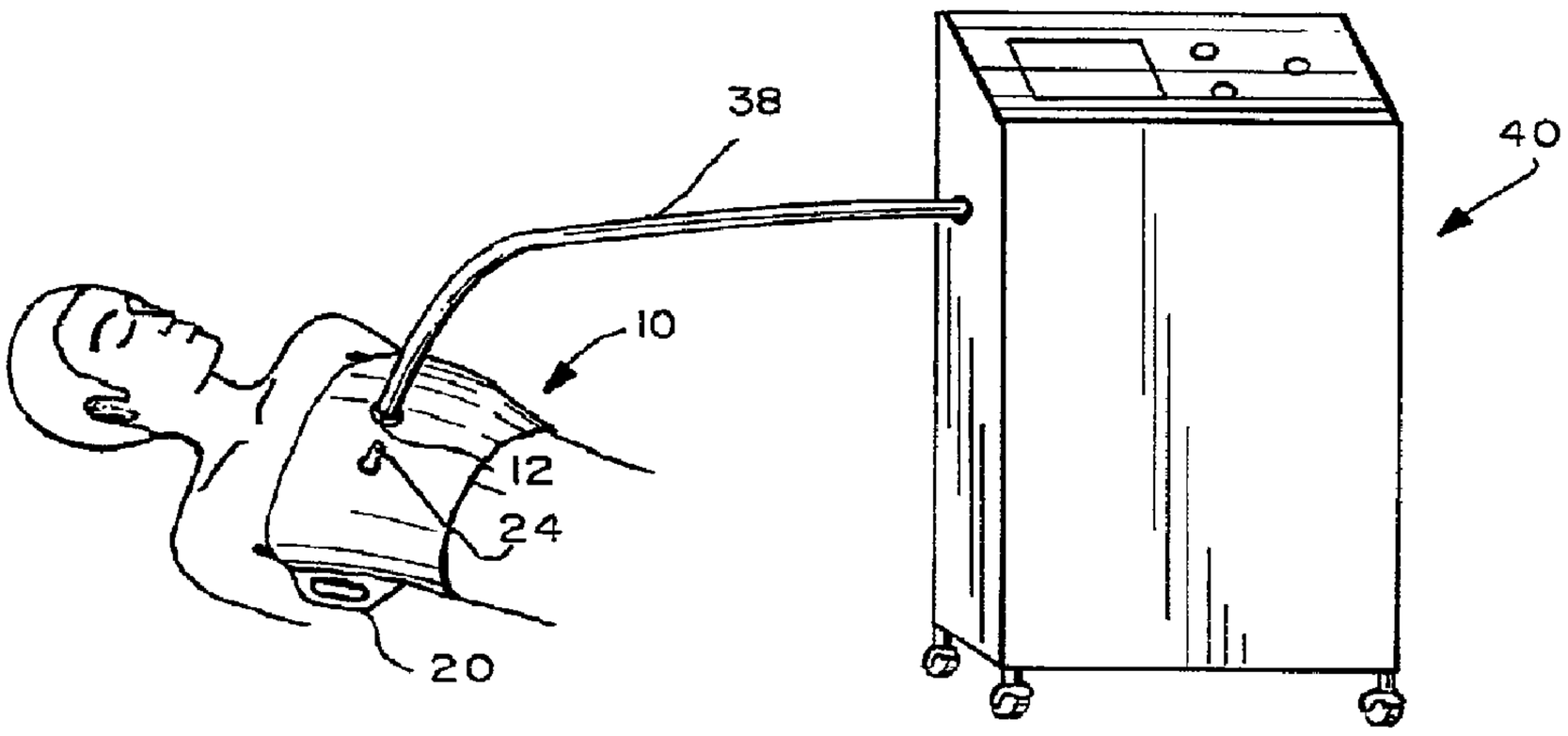

(57) Abrégé/Abstract:
An improved vest design (10) for cardiopulmonary resuscitation is disclosed. The vest (10) includes an inflatable bladder (22) capable of radial expansion to first conform to a patient's chest dimensions and then to apply circumferential pressure. The improved vest design (10) affords ease of placement on a patient without concern for how tightly the vest (10) is initially applied. Also disclosed are various vest designs (88, 90, 92) that reduce the amount of compressed air that must be used for each compression/decompression cycle of the vest (10). These improvements lower the energy consumption and make smaller and portable cardiopulmonary resuscitation systems possible.

CA 02215056 1997-09-10

PCT

WORLD INTELLECTUAL PROPERTY ORGANIZATION
International Bureau

INTERNATIONAL APPLICATION PUBLISHED UNDER THE PATENT COOPERATION TREATY (PCT)

(51) International Patent Classification 6 :
A61H 31/00

A1

(11) International Publication Number: WO 96/28129

(43) International Publication Date: 19 September 1996 (19.09.96)

(21) International Application Number: PCT/US96/03498

(22) International Filing Date: 15 March 1996 (15.03.96)

(30) Priority Data:
404,442 15 March 1995 (15.03.95) US

(71) Applicants: JOHNS HOPKINS UNIVERSITY [US/US]; 720 Rutland Avenue, Baltimore, MD 21205 (US). CARDIOLOGIC SYSTEMS, INC. [US/US]; Suite 190, 1500 Joh Avenue, Baltimore, MD 21227 (US).

(72) Inventors: GELFAND, Mark; 3800 Baker's Schoolhouse Road, Baltimore, MD 21053 (US). GRUBEN, Kreg, George; 201 South Madison Street, Stoughton, WI 53589 (US). HALPERIN, Henry; 7708 Crossland Road, Baltimore, MD 21208 (US). KEOPSELL, Jeffrey, D.; 1970 Bethany Road, Alphareta, GA 30201 (US). ROTHMAN, Neil, S.; 5 Crystal Field Court, Baltimore, MD 21209 (US). TSITLIK, Joshua, E.; 121 Northway Road, Reisterstown, MD 21136 (US).

(74) Agent: NELSON, Jeffry, H.; Nixon & Vanderhye P.C., 8th floor, 1100 North Glebe Road, Arlington, VA 22201-4714 (US).

(81) Designated States: AL, AM, AT, AU, AZ, BB, BG, BR, BY, CA, CH, CN, CZ, DE, DK, EE, ES, FI, GB, GE, HU, IS, JP, KE, KG, KP, KR, KZ, LK, LR, LS, LT, LU, LV, MD, MG, MK, MN, MW, MX, NO, NZ, PL, PT, RO, RU, SD, SE, SG, SI, SK, TJ, TM, TR, TT, UA, UG, UZ, VN, ARIPO patent (KE, LS, MW, SD, SZ, UG), Eurasian patent (AM, AZ, BY, KG, KZ, MD, RU, TJ, TM), European patent (AT, BE, CH, DE, DK, ES, FI, FR, GB, GR, IE, IT, LU, MC, NL, PT, SE), OAPI patent (BF, BJ, CF, CG, CI, CM, GA, GN, ML, MR, NE, SN, TD, TG).

Published

With international search report.

(54) Title: IMPROVED VEST DESIGN FOR A CARDIOPULMONARY RESUSCITATION SYSTEM

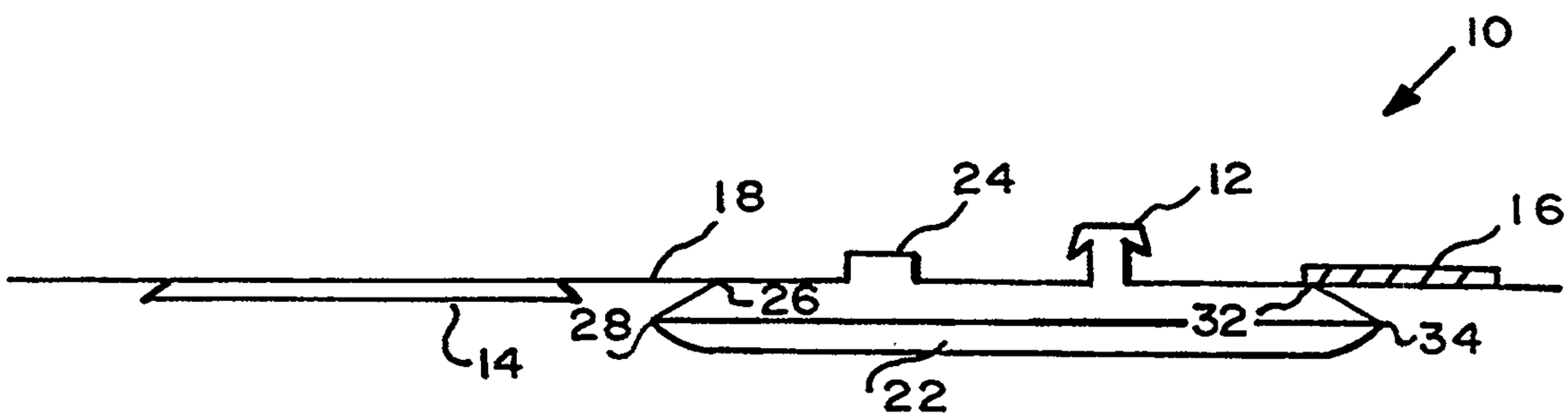

(57) Abstract

An improved vest design (10) for cardiopulmonary resuscitation is disclosed. The vest (10) includes an inflatable bladder (22) capable of radial expansion to first conform to a patient's chest dimensions and then to apply circumferential pressure. The improved vest design (10) affords ease of placement on a patient without concern for how tightly the vest (10) is initially applied. Also disclosed are various vest designs (88, 90, 92) that reduce the amount of compressed air that must be used for each compression/decompression cycle of the vest (10). These improvements lower the energy consumption and make smaller and portable cardiopulmonary resuscitation systems possible.

IMPROVED VEST DESIGN FOR A CARDIOPULMONARY RESUSCITATION SYSTEM

BACKGROUND

1. Field of the Invention

The present invention relates to cardiopulmonary resuscitation (CPR) and circulatory assist systems and in particular to an improved vest design providing both ease of application and reduced energy consumption.

2. Description of the Prior Art

Cardiac arrest is generally due to ventricular fibrillation, which causes the heart to stop pumping blood. The treatment of ventricular fibrillation is defibrillation. If, however, more than a few minutes have lapsed since the onset of ventricular fibrillation, the heart will be sufficiently deprived of oxygen and nutrients such that defibrillation will generally be unsuccessful. At that point it is necessary to restore flow of oxygenated blood to the heart muscle by cardiopulmonary resuscitation in order for defibrillation to be successful.

U.S. patent 4,928,674 issued to Halperin et.al. teaches a method of cardiopulmonary resuscitation that generates high levels of intrathoracic pressure. Halperin et.al. teaches the use of an inflatable vest operating under a pneumatic control system to apply circumferential pressure around a patient's chest. Halperin et.al. discloses various vest designs using a rigid base and one or more inflatable bladders. The present invention represents an improvement to the vest design taught by Halperin et.al. to achieve two results: first, to design a vest which can be easily applied to a patient without concern for how tightly the vest is applied; and, second, to design a vest which requires less compressed air to achieve the same compression/depression cycle and therefore consumes less energy. The latter result would make a portable CPR system practical.

Other prior art vest designs suggest for CPR use, which do not achieve the above results, are found in U.S. patents 4,424,806 and

4,397,306. Similarly, other pneumatic vest designs are known in the art search as the pneumatic pressure respiratory vest described in U.S. patent 2,869,537. However, such vests are not designed for cardiopulmonary resuscitation systems and therefore were not designed to achieve ease of application during an emergency situation or minimize energy consumption.

SUMMARY OF THE INVENTION

The present invention is an improved inflatable vest designed to be used in cardiopulmonary resuscitation (CPR) and circulatory assist systems. The vest overcomes deficiencies in prior art designs and specifically accomplishes two objectives. The first objective is to achieve a vest design which can easily be applied in an emergency situation. Key to the achievement of this objective is the design of a radially expandable bladder which first expands to conform to a patient's dimensions and then applies the desired circumferential pressure. The second objective is a vest design which minimizes the amount of compressed air needed in the compression/decompression cycle. Achieving this objective reduces energy consumption and makes a portable vest system practical.

In order to achieve the first objective the invented vest is designed to work equally well whether it is applied tightly or loosely. It is designed to easily slip under a patient laying on his back and extend around the patient's chest. It is designed to attach easily around the patient's chest without the need for complicated hooks or locks. The improved vest is also designed with a safety valve positioned directly on the vest. Key to the improved vest design is a bladder means for radially expanding when filled with compressed air to conform to the patient's dimensions regardless of how tightly or loosely the vest is applied.

In order to achieve the second objective, the "dead space" in the pneumatic hose and vest is reduced. "Dead space" is defined as that volume of bladder and tubing not contributing to chest compression.

Several embodiments of the vest design are disclosed to accomplish this objective. In a first embodiment, inflation and deflation poppet valves are incorporated into the design of a multilumen pneumatic hose supplying compressed air to the vest. In a second embodiment uniquely-designed inflation/deflation poppet valves are incorporated into the vest. In a third embodiment various techniques are taught to further eliminate the "dead space" occurring in the vest.

BRIEF DESCRIPTION OF DRAWINGS

Figures 1a - 1c are engineering drawings showing various views of the improved CPR vest design.

Figures 2a - 2c are schematic drawings showing the radial expansion of the bladder means in order to compensate for the initial tightness of the vest.

Figure 3 is a schematic drawing of the CPR system, including the improved vest design.

Figure 4 shows the pressure curve in the CPR vest during its inflation/deflation cycles.

Figure 5 is a schematic drawing showing the pneumatic control system for use with the vest.

Figures 6 shows the pressure curve in the vest when the vest is either tightly applied or loosely applied.

Figures 7shows an inflation and deflation valve configuration incorporated into the pneumatic hose, to reduce energy consumption.

Figures 8a - 8b show an inflation and deflation valve configuration incorporated into the vest, to reduce energy consumption.

Figure 9 is a cut-away view of a multilumen pneumatic tube used with the CPR vest.

Figures 10a - 10c show various configurations of vest design to eliminate the "dead space".

DESCRIPTION OF THE PREFERRED EMBODIMENTS

The details of the improved vest design 10, as taught by the present invention, are shown in Figures 1A, 1B, and 1C. The vest 10 is coupled by connector 12 to a hose and a pneumatic control system (shown in Figure 3) for controlled inflation and deflation. The vest 10 is designed to fit around a patient's chest with hook and loop strips 14, 16 (i.e., Velcro ™ brand strips) used to secure the vest around the patient. The body of the vest 10 comprises a belt 18, a handle 20, a radially expandable bladder 22, and pressure safety valve 24. The belt 18 can be made from polyester double coated with polyurethane. The integral safety valve 24 provides additional protection against over inflation of the vest. The handle 20 is used to assist the operator in applying the vest 10 around the patient. In operation, the patient who would be normally on his back would be rotated to his side. In one technique for applying the vest, the vest handle 20 would be pushed under the patient and the patient rotated back onto his back. The handle 20 would than be used for pulling the vest from under the patient a short distance. The portion of the vest remaining on the patient's other side would be wrapped around the chest, with the hook strip 16 positioned to engage the loop strip 14 adjacent to the handle 20. With the vest now secured around the patient's chest, the bladder 22 can be inflated in a controlled manner to apply circumferential compression to the chest. The controlled inflation and deflation of the vest, with the resulting circumferential compression of the chest drives oxygenated blood to the heart and brain.

The improved vest design is insensitive to how tightly the vest is applied to the patient. The vest itself is self compensating for different patient dimensions. The bladder 22 is designed to be radially expandable and thus to apply a preset pressure to the patient's chest regardless of how tightly the vest is initially applied. Bladder 22, as shown in Figures 1A, IB and IC is made from two flat pieces of a nylon fabric double coated with polyurethane, and connected along seams 26, 28, and 32, 34. This design geometry, and similar designs using multiple side panels, allows the bladder

to extend radially (like a bellows) when inflated. Radial expansion is achieved by using an inextensible material, that has no significant ballooning when inflated, and a geometry that permits extension in one direction. This radial expansion is best shown in Figures 2a, 2b, and 2c. When the bladder is inflated it expands radially to make contact with the patient's chest. Whether the belt 18 is attached loosely or tightly around the patient's chest, the bladder is designed to radially expanded to evenly contact the chest. After contacting the chest, the bladder can be further pressurized to apply consistent circumferential compression to the chest. This feature of the vest design is key to the practical application of the CPR vest around a patient.

Figure 3 is a schematic diagram showing the improved vest 10 as part of the overall cardiopulmonary resuscitation system. Female connector 12 on the vest 10 connects it by a hose 38 to the pneumatic control system 40. The vest 10 is placed around the patient using handle 20 to pull the vest under the patient's back. The vest is then secured to the patient by connecting hook and loop strips 14, 16 (as shown in Figure 1A). Because of the unique vest bladder design, the vest need not be attached around the patient with any specified firmness. The bladder design allows it to compensate for a loose or tight vest fit.

The pneumatic control system 40 inflates and deflates the bladder 22 to achieve a particular cycle of chest compression and release. As shown in Figure 4, the bladder is first inflated to apply a certain circumferential pressure to the chest (Pc); the bladder is then deflated in a controlled manner to a second lower bias pressure (Pb). This cycle is repeated a number of times; at a set number of cycles the bladder pressure is decreased further to ambient pressure (Pa) to allow ventilation of the patient. This overall cycle is repeated as long as the treatment is applied. In the embodiment illustrated in Figure 4, the bladder pressure is decreased to ambient pressure (Pa) on the fifth cycle.

Figure 5 is a schematic drawing showing the control system 40, connected by pneumatic hose 38 to the invented vest 10. The emergency relief valve 24 is incorporated into the vest design and would release air from the vest if pressure exceeds some set amount above the designed compression pressure (Pc). The control system 40 comprises: air tank 42 (for storing pressurized air); control valve 44 (for directing compressed air from the airtank 42 into the vest 10 and for releasing compressed air from the vest); control valve 44 (consisting of two independent valves 44a and 44b); vest pressure transducers 46 (for monitoring pressure in the vest); computer 48; motor 50; main air pump 52 (for pumping air into tank 42); pilot air pump 54 (for generating compressed air to operate control valve 44); power supply 56; batteries 58; pilot pressure manifold 60 (distributes air to pneumatic valves 44). In operation, valve 44a will be open allowing air from tank 42 to flow through connecting tube 38 to inflate vest 10. When pressure traducer 46 detects pressure approaching compression pressure (Pc) the valve 44a is closed. At the appropriate time interval, valve 44b is open allowing compressed air in the vest 10 to escape. When sensor 46 detects the pressure in the vest approaching the bias pressure (Pb), computer 48 closes valve 44b (on the fifth cycle, the valve 44b remains open until the start of the next inflation cycle, allowing vest pressure to approach ambient pressure (Pa)). Computer 48 utilizes an algorithm to operate valves 44a and 44b in advance of the pressure reaching the preset levels to anticipate the time delay between valve actuation and actual closure.

As mentioned earlier, the vest 10 is designed to expand radially. With this design feature it does not matter whether the vest is applied tightly or loosely. As shown in Figures 6, the vest will expand to conform with the chest and is further pressurized to apply pressure until the compression pressure (Pc) is reached. In Figure 6 the vest is shown tightly applied around the patient's chest and the vest is loosely applied. In both situations the vest -will expand radially the appropriate distance to contact

the chest and will then continue to apply pressure until the desired compression pressure (Pc) is achieved. However, when the vest is loosely applied, the amount of air that needs to flow into the loose vest (Figure 6) is greater and as a result the time to reach the compression pressure (Pc) will be greater. (Note the difference between t1 (62) and t2 (64) in Figure 6.). Therefore, the need for precise application of the vest to a certain tightness around the patient's chest is avoided. This feature is very important because in the hectic situation of responding to a patient's need, precise application of the vest should not be an additional concern to the physician team.

In another embodiment of the vest shown in Figures 7a, 7b, 8a, and 8b, the control valves 44 are placed either in the remote (vest end) end of the pneumatic hose 38 or directly on the vest. Such placement of the inflation/deflation control valves will reduce the amount of air consumed during the inflation and deflation cycle since the hose will no longer be inflated for each cycle. This feature reduces the amount of energy consumed during each cycle and will result in the use of a smaller motor, smaller storage tank and smaller batteries. This feature would be of particular importance for a portable CPR vest design.

In Figure 7b, the control valves 44 are positioned in the vest end of pneumatic hose 38. A first inflation poppet valve 66 is controlled by pilot air 68 to allow pressurized air to enter the vest 10. A second deflation poppet valve 70 is controlled by pilot air 72 to allow pressure to escape from the vest 10. The inflation and deflation valves 44 work in a manner similar to those described earlier (see, Figure 5). The pneumatic hose 38 used in this embodiment requires at least a three lumen design. As shown in Figure 9, a first lumen 74 contains pressurized air for inflating the vest, a second lumen contains pressurized pilot air 68 for controlling the inflation poppet valve 66, and a third lumen contains pressurized pilot air 73 for controlling the deflation poppet valve 70. In an alternative design, four (4) lumens are used, one lumen for vest air supply, two lumens for valve pilot

air and an additional lumen (79) used to detect vest pressure for the control computer.

Similarly, as shown in Figures 8a and b, the inflation and deflation valves 44 can be positioned on, and be part of, the disposable vest 10. As described previously, the pneumatic hose 38 contains at least three lumens to supply the inflation control pilot air, the deflation control pilot air and the pressurized inflation air (see, Figure 8a). As shown in Figure 8c, this embodiment also contains an inflation poppet valve 80 controlled by pilot air 82 and a deflation poppet 84 controlled by pilot air 86. Obviously, different valve designs are envisioned and valves that could be electronically activated are also within the contemplation of the inventors. The key is that the valves are positioned directly on the vest or on the vest end of the pneumatic hose. It is further envisioned that by placing the valves on the vest (or vest end of the pneumatic hose) that a sufficient reduction in power is achieved making a portable CPR vest system practical. This portable system would utilize a small pack of DC batteries to power the compression motors or be powered by a high pressure tank that is pre-charged with air at high pressures (around 4000psi).

Figures 10a, 10b and 10c show various embodiments of vest design that further reduce energy consumption by reducing the "dead space" in the vest. Thirty percent (30%) to forty percent (40%) of the energy used to operate the CPR vest is consumed by moving compressed air into "dead space" found in the vest's bladder and tubing. "Dead space" is defined as that volume of the bladder and tubing not contributing to chest compression. (The "dead space" in the tubing can be eliminated as described above, by placing the control valves directly on the vest or the vest end of the pneumatic hose.) Several solutions for reducing the "dead space" in the vest itself are shown in Figures 10a, 10b, and 10c. In Figure 10a, a secondary bladder 88 is inflated by an air source to reduce the "dead space". This secondary bladder may be positioned either in front or behind the main bladder. It may also be partioned as more fully described relative

to Figure 10c. In Figure 10b, foam or other substances 90 are placed in the bladder to reduce the "dead space". In an alternative embodiment, the foam or other expandable substance would be injected into a secondary bladder to remove dead space in the primary bladder. In Figure 10c, a partitioned, or honeycombed design 92 is used to reduce the "dead space". Reducing the "dead space" reduces the amount of compressed air needed to inflate the vest and to achieve the desired compression pressure (Pc). With less compressed air movement being required, less energy is needed to operate the CPR system.

Obviously, many modifications and variations of the present invention are possible in light of the above teachings. It is therefore to be understood that within the scope of the appended claims, the invention may be practiced otherwise than as specifically described.

WHAT IS CLAIMED IS:

1. An inflatable vest for administering CPR to a patient, the patient having a chest, armpits, and a sternum, said sternum having a superior-inferior length and said chest having an anterior surface, the inflatable vest comprising:

a belt sized to circumferentially fit around the patient and to cover substantially the entire width of the chest between the armpits and to cover substantially the entire superior-inferior length of the sternum, said belt being substantially circumferentially inextensible when fitted around the patient; and

a bladder attached to the belt, said bladder having a width and said bladder comprising:

a bottom-chest panel composed of an inextensible material that is adapted to cover at least substantially the entire portion of the anterior surface of the chest of the patient;

a top-belt panel composed of an inextensible material and sealed to the bottom-chest panel to form a gas tight bladder chamber having an opening to receive compressed gas;

wherein the bottom-chest panel and the top-belt form a radially extensible bellows.

2. An inflatable vest for administering CPR to a patient, the patient having a chest, armpits, and a sternum, said sternum having a superior-inferior length, the vest comprising:

a belt sized to circumferentially fit around the patient and to cover substantially the entire width of the chest between the armpits and to cover substantially the entire superior-inferior length of the sternum, said belt being substantially circumferentially inelastic when fitted around the patient; and

a bladder, attached to the belt, said bladder having a width, said bladder comprising:

a bottom-chest panel composed of an inelastic material that is adapted to cover at least substantially the entire portion of the top of the chest of the patient; and

a top-belt panel composed of an inelastic material and sealed to said bottom-chest panel to form a gas tight bladder chamber having a opening to receive compressed gas;

wherein the bottom-chest panel and the top-chest panel form a radially inelastically extensible bellows.

3. The vest according to claim 2, wherein the width of said bladder is at least two inches greater than the width of the belt.

4. An inflatable vest for administering CPR to a patient, the patient having a thorax, the vest comprising:

a belt sized to circumferentially fit around the patient, said belt having a width to cover substantially the entire thorax of the patient, said belt being substantially circumferentially inextensible when fitted around the patient; and

a bladder, attached to the belt, said bladder having a width greater than the width of the belt, said bladder comprising:

a bottom-chest panel composed of an inextensible material that is adapted to cover substantially the entire thorax of the patient;

a top-belt panel composed of an inextensible material and sealed to said bottom-chest panel to form a gas tight bladder chamber having a opening to receive compressed gas;

wherein the bottom-chest panel and the top-chest panel form a radially extensible bellows.

5. The vest according to claim 4, wherein the width of said belt is about ten inches.

6. The vest according to any one of claims 4 or 5, wherein the width of said bladder is at least two inches greater than the width of the belt.

7. An inflatable vest for administering CPR to a patient, the patient having a chest, armpits, and a sternum, said sternum having a superior-inferior length, said vest comprising:

a belt sized to circumferentially fit around the patient and to cover substantially the entire width of the chest between the armpits and to cover substantially the entire superior-inferior length of the sternum, said belt being substantially circumferentially inextensible when fitted around the patient;

a detachable bladder, detachably attached to the belt, said bladder having a width, said bladder comprising:

a bottom-chest panel composed of an inextensible material that is adapted to cover at least substantially the entire portion of the top of the chest of the patient;

a top-belt panel composed of an inextensible material and sealed to said bottom-chest panel to form a gas tight bladder chamber having a opening to receive compressed gas;

wherein the bottom-chest panel and the top-chest panel form a radially extensible bellows.

8. The vest according to claim 7, wherein the width of said bladder is at least two inches greater than the width of the belt.

9. An inflatable vest for administering CPR to a patient, the patient having a chest, said chest having an anterior surface extending laterally between the patient's armpits and superiorly along the superior-inferior length of the patient's sternum, said inflatable vest comprising:

a belt sized to circumferentially fit around the patient's chest and to cover substantially the entire anterior surface of the chest, said belt being substantially circumferentially inextensible when fitted around the patient; and

a bladder attached to the belt so that, when the belt is fitted around the patient's chest, the bladder is disposed between the belt and the patient's chest, said bladder having a width and said bladder comprising:

a bottom panel composed of an inextensible material that is adapted to cover substantially the entire anterior surface of the chest of the patient;

a top panel composed of an inextensible material and sealed to the bottom-chest panel to form the bladder.

10. The vest according to claim 9 wherein the bladder further comprises an opening to receive compressed gas.

11. The vest according to any one of claims 9 or 10 wherein the bottom-chest panel and the top-belt form a radially extensible bellows.

12. The vest according to any one of claims 9 to 11, wherein the bottom-chest panel and the top-belt panel are made of nylon fabric double coated with polyurethane.

13. The vest according to any one of claims 9 to 12, wherein the width of said bladder is at least two inches greater than the width of the belt.

14. The vest according to any one of claims 9 to 13, wherein the width of said belt is about ten inches.

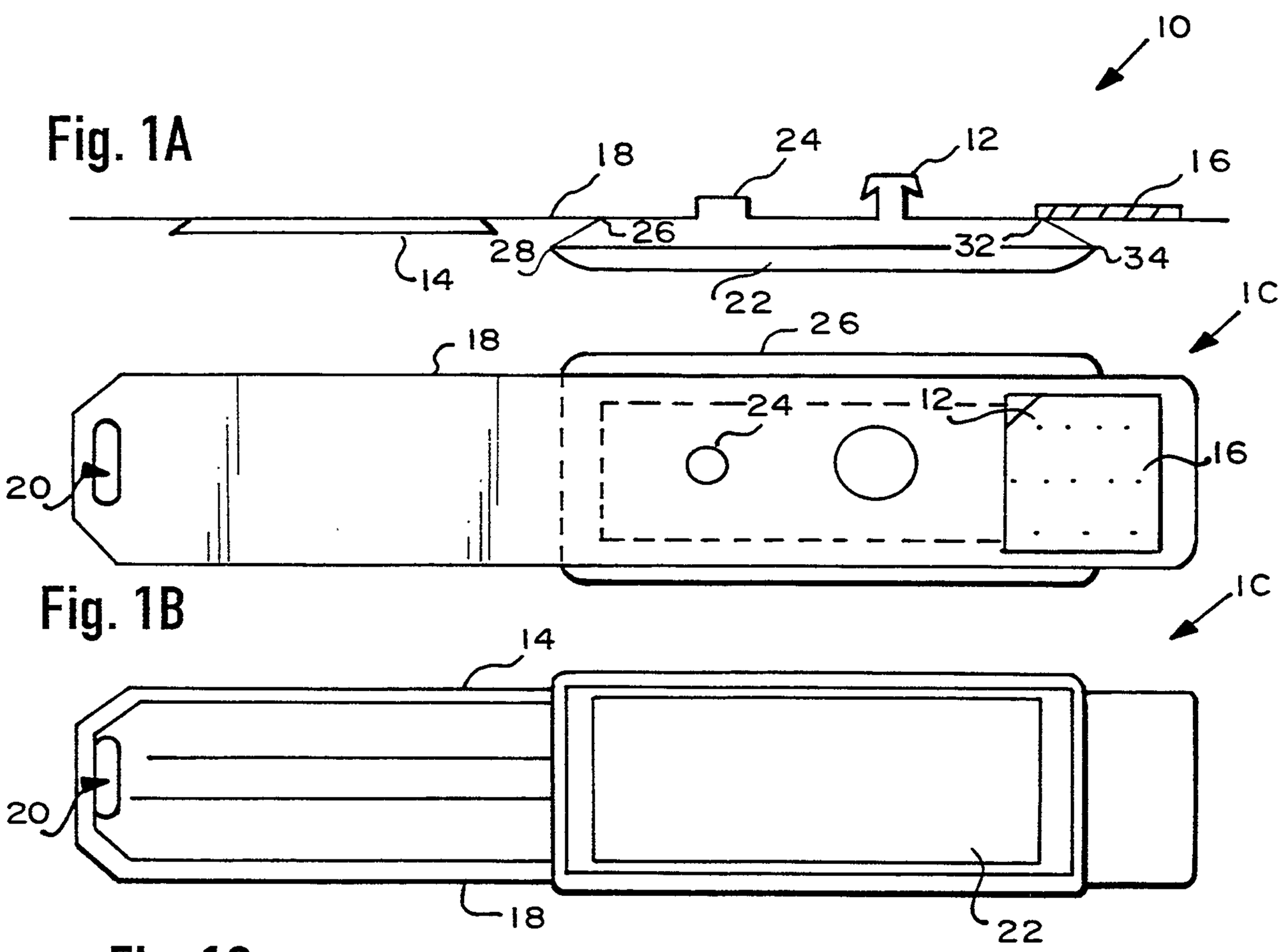

Fig. 1A

Fig. 1B

Fig. 1C

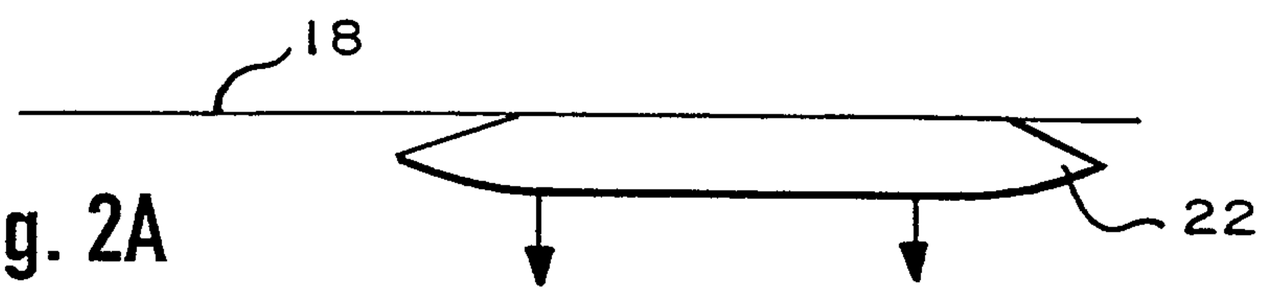

Fig. 2A

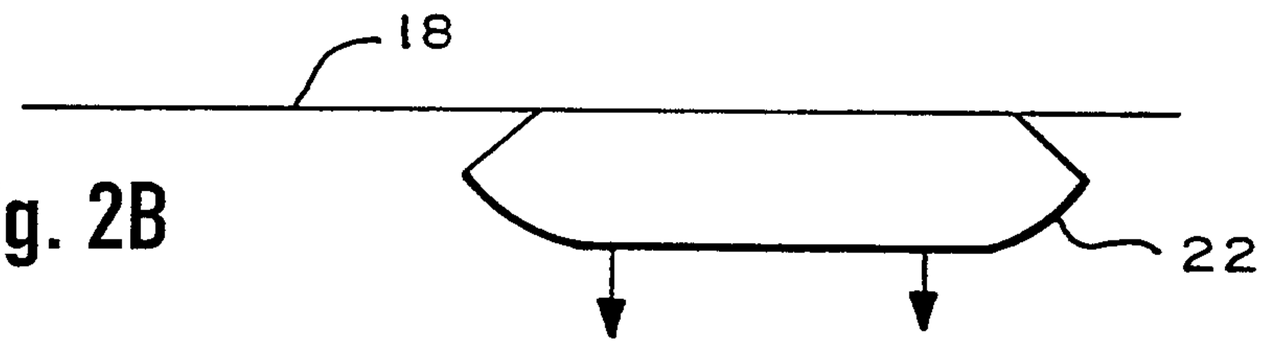

Fig. 2B

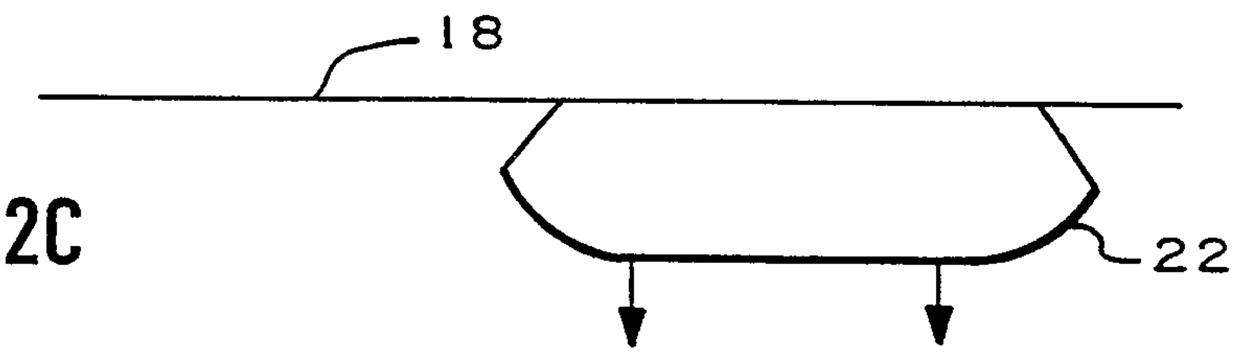

Fig. 2C

Fig. 3

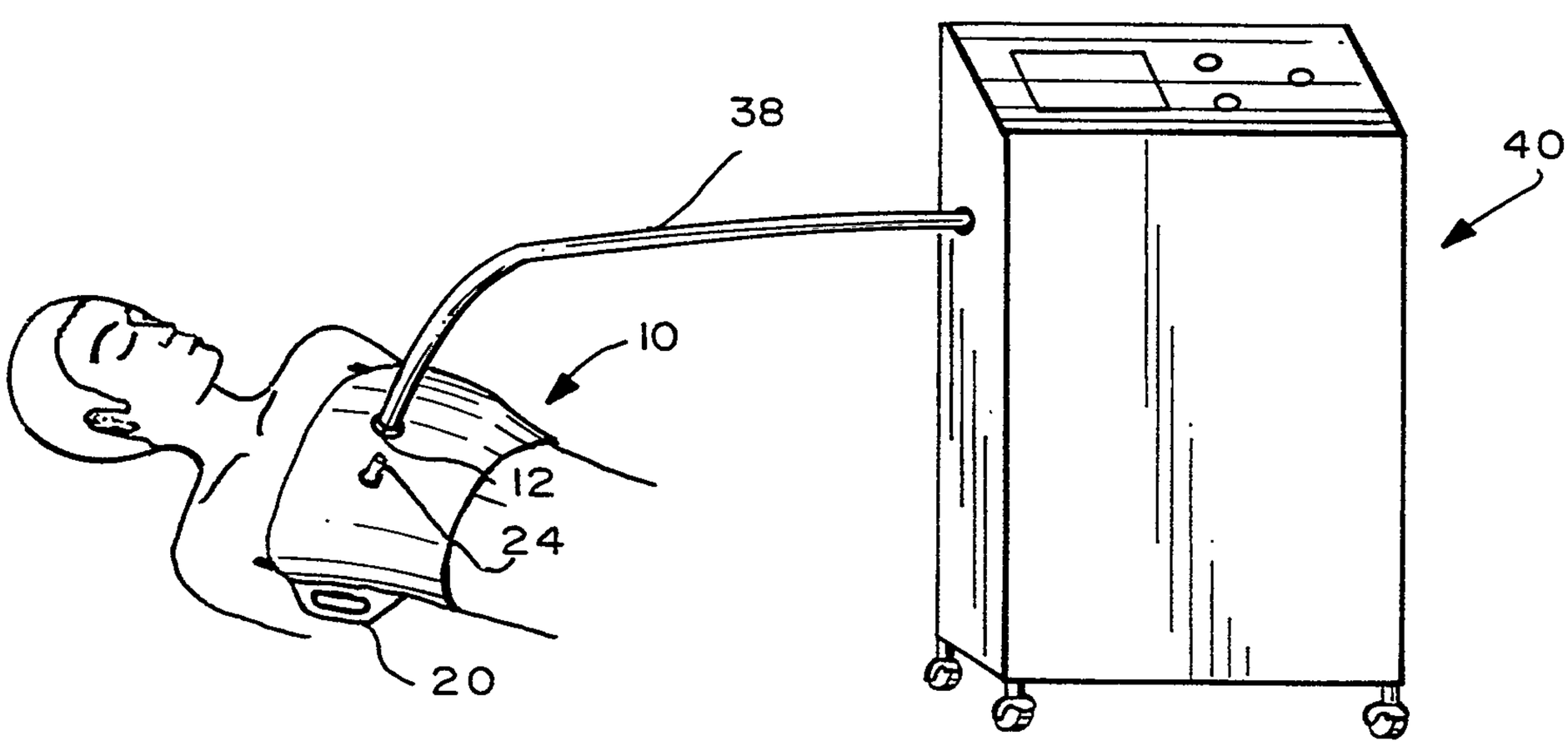

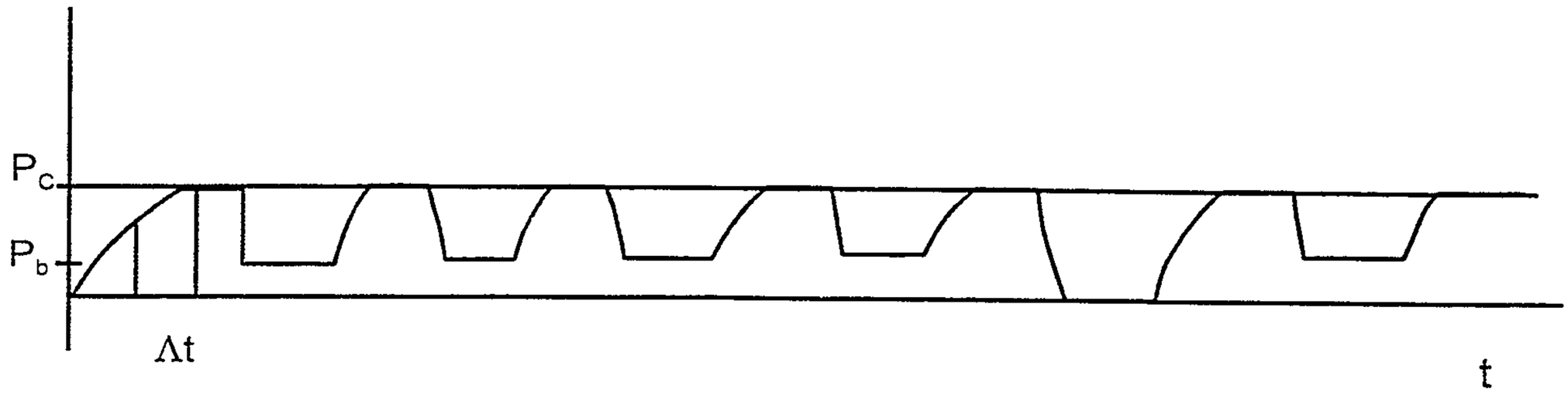

Fig. 4

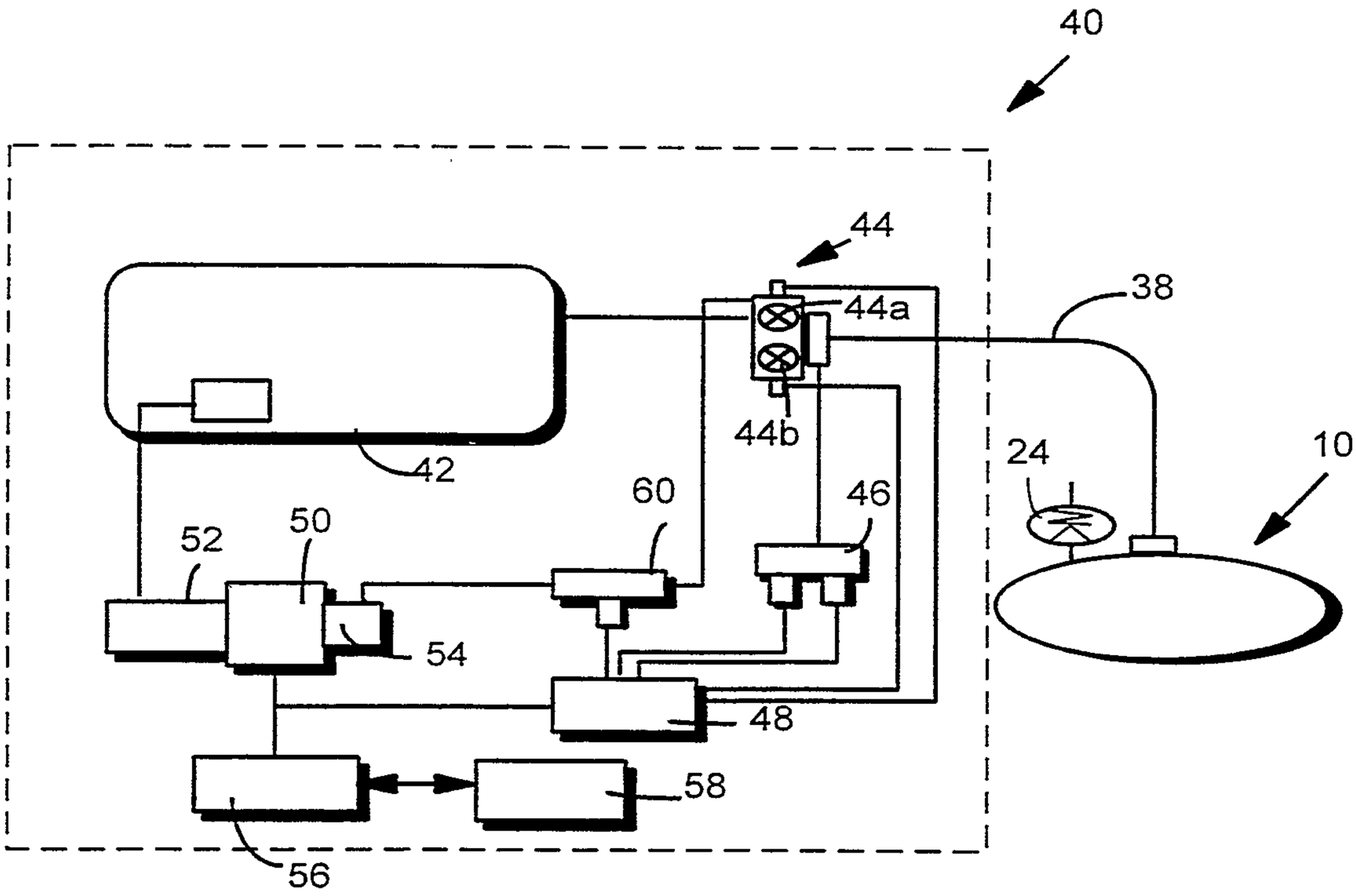

Fig. 5

Fig. 6

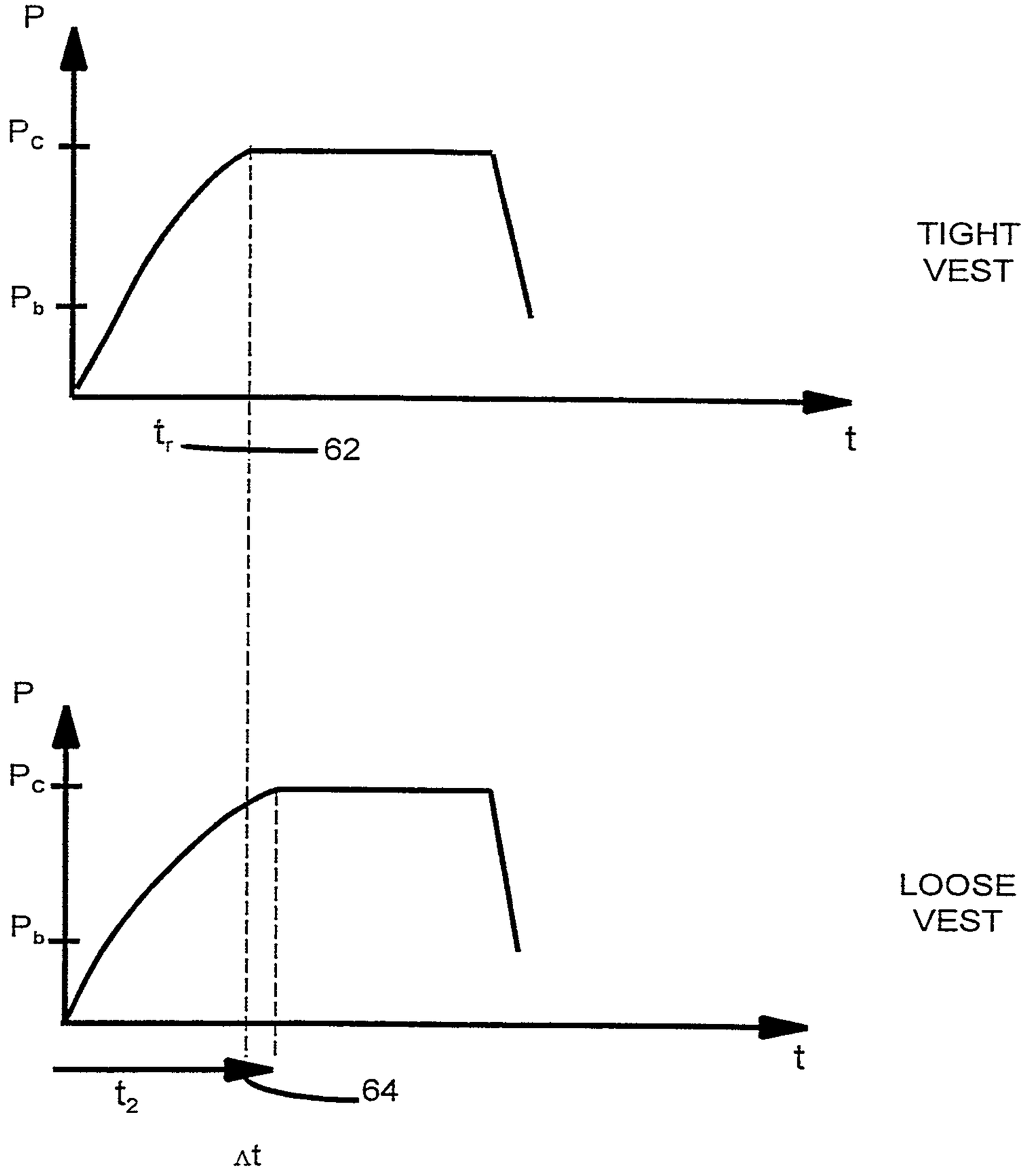

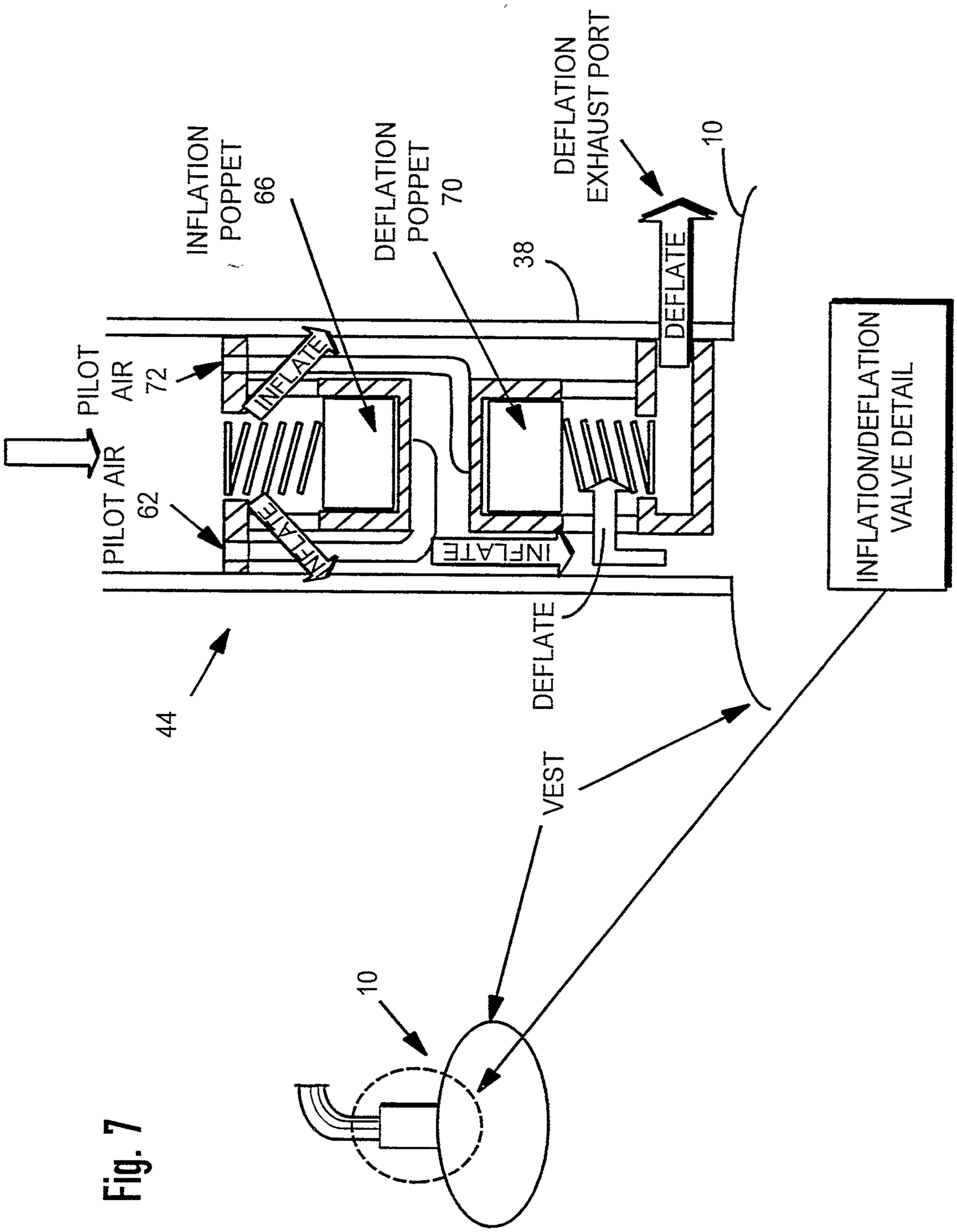
INFLATION/DEFLATION VALVE DETAIL
DEFLATION EXHAUST PORT
INFLATION POPPET 66
DEFLATION POPPET 70
10
38
DEFLATE
INFLATE
PILOT AIR 72
PILOT AIR 62
INFLATE
INFLATE
DEFLATE
44
VEST
10

Fig. 7

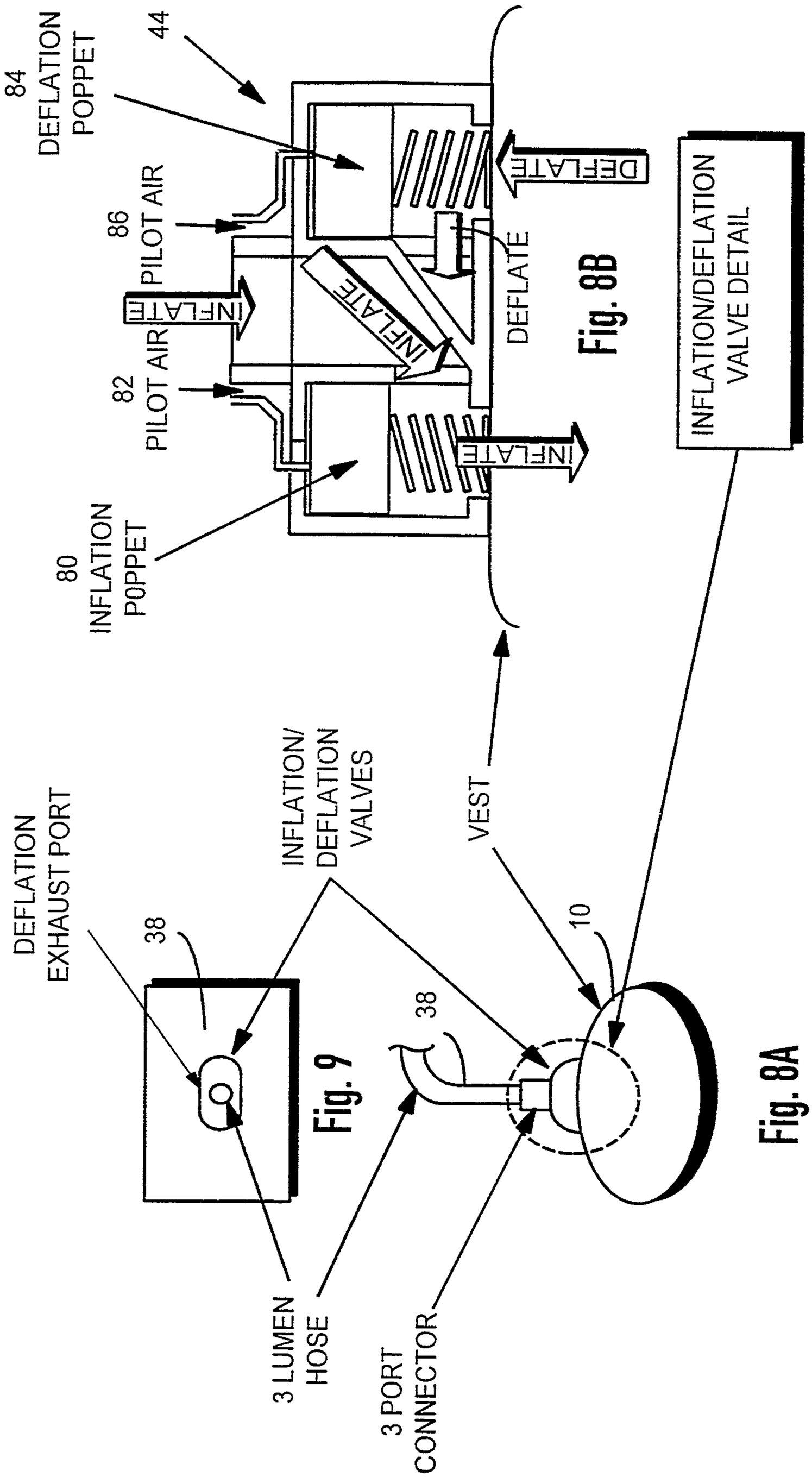
84
DEFLATION
POPPET
44
86
PILOT AIR
INFLATE
82
PILOT AIR
80
INFLATION
POPPET
DEFLATE
INFLATE
DEFLATE
INFLATE
INFLATION/DEFLATION
VALVE DETAIL
Fig. 8B
DEFLATION
EXHAUST PORT
38
INFLATION/
DEFLATION
VALVES
VEST
10
38
3 LUMEN
HOSE
3 PORT
CONNECTOR
Fig. 9
Fig. 8A

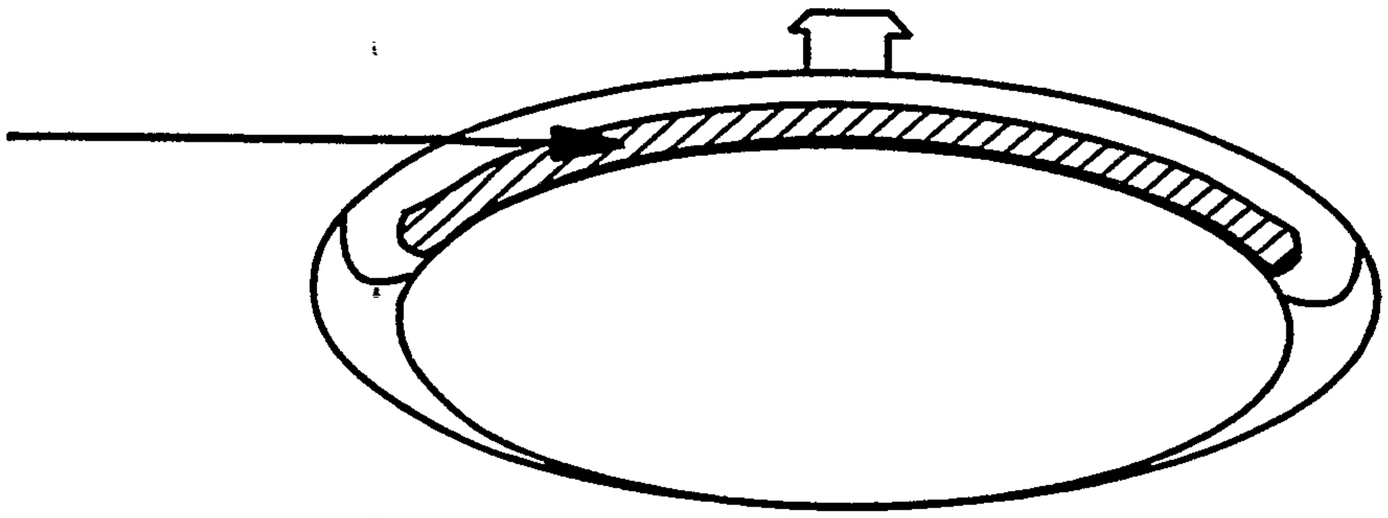

Fig. 10A

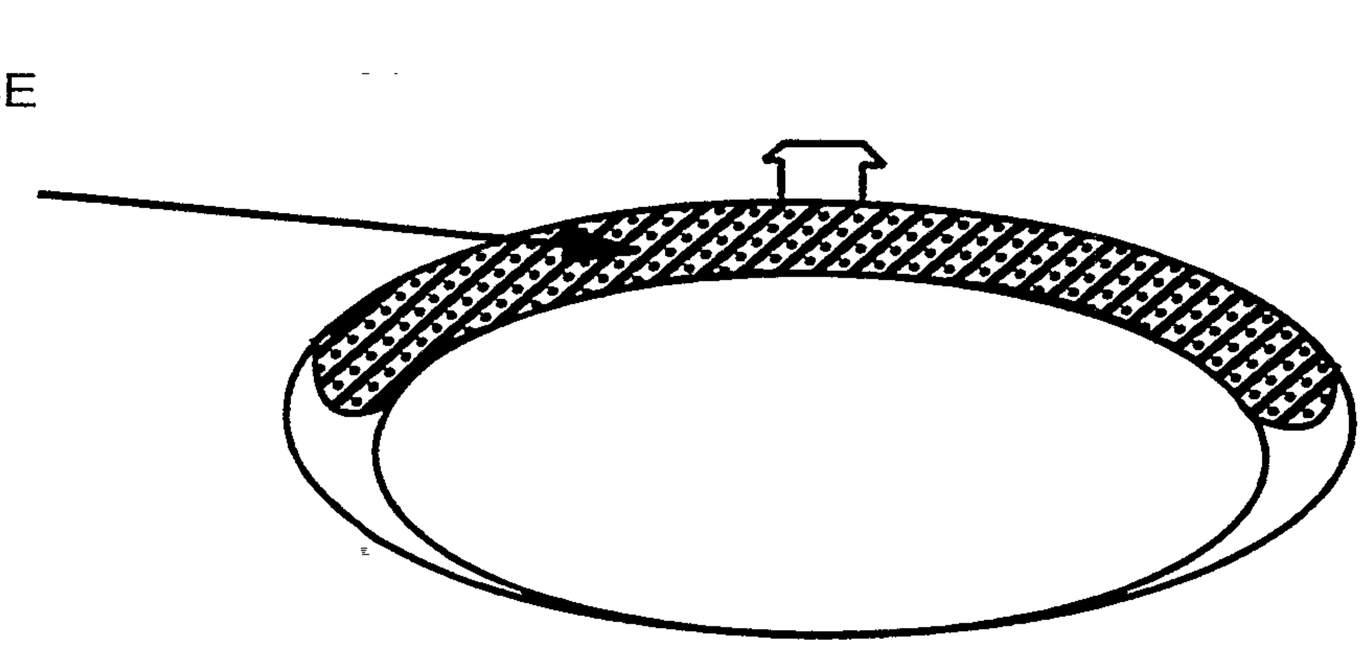

Fig. 10B

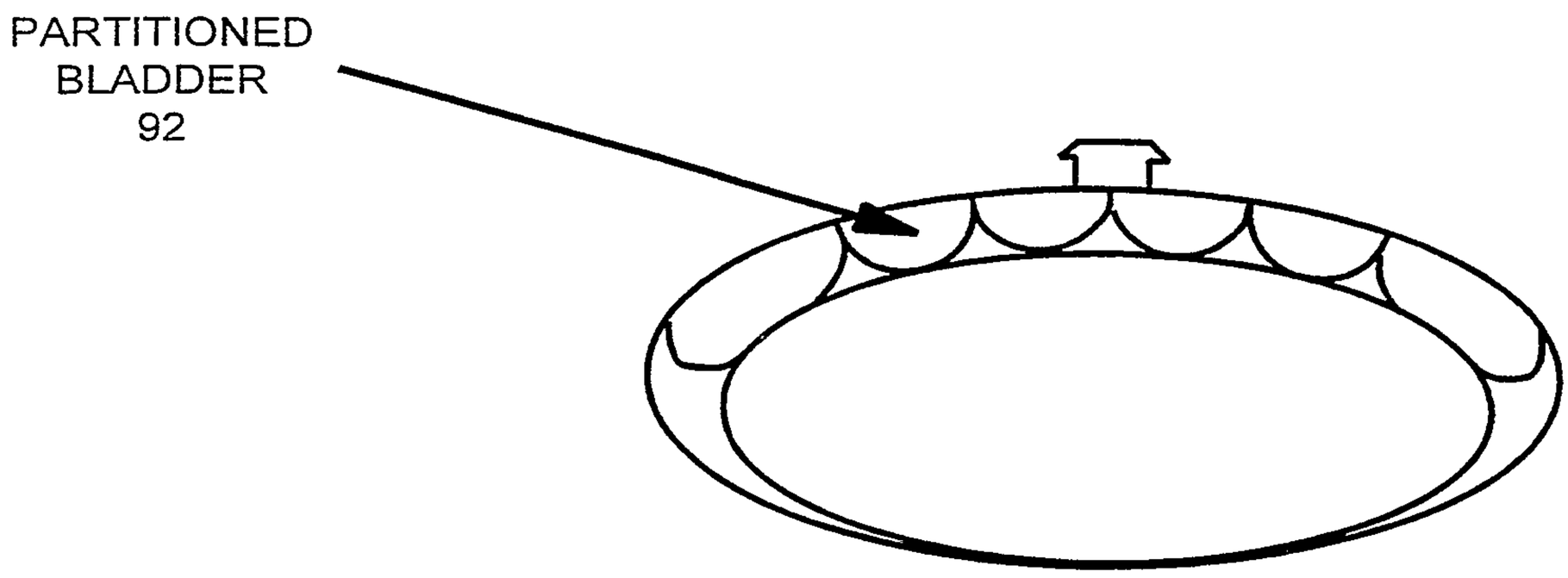

Fig. 10C

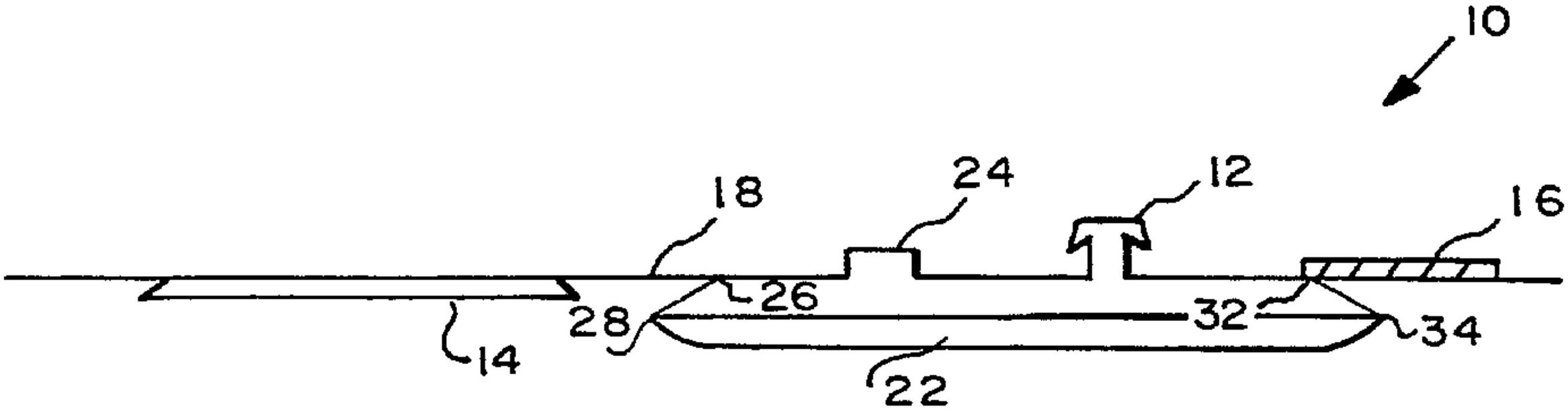
10
18
24
12
16
26
28
32
34
14
22

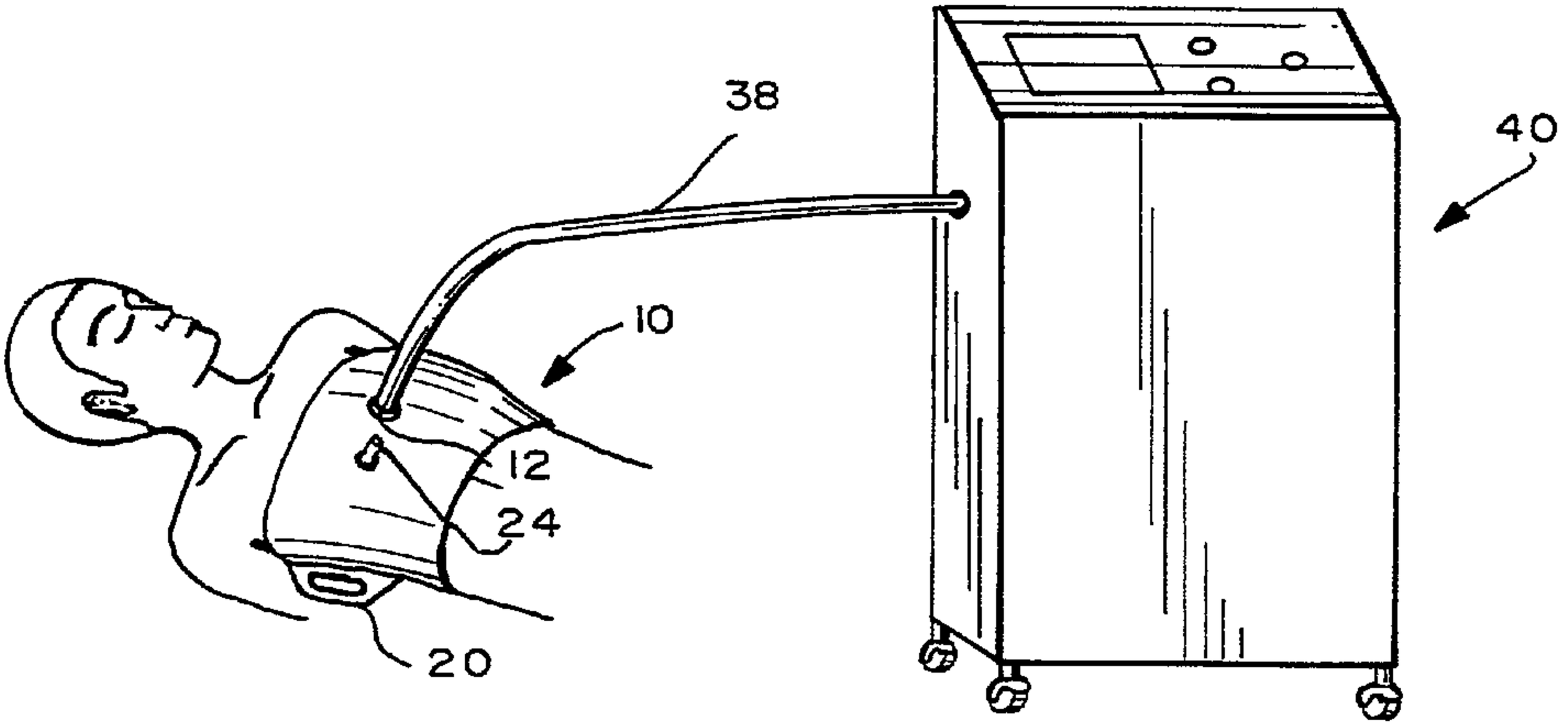
38
40
10
12
24
20