Jan. 31, 1956 J. A. AMICO 2,732,636

ARCH SUPPORT CONSTRUCTION

Filed July 14, 1952

FIG. 1.

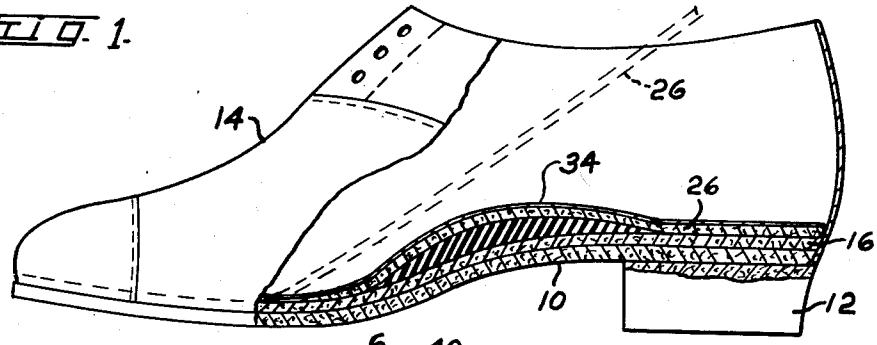

FIG. 2.

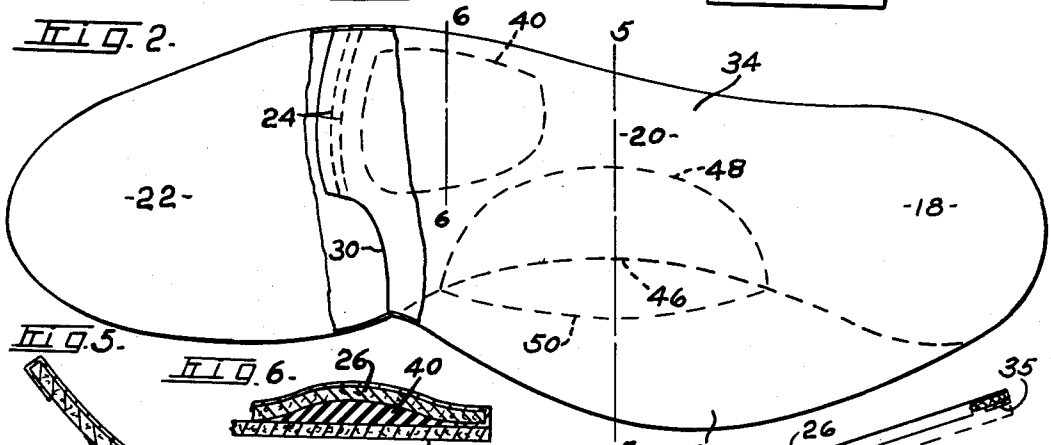

FIG. 5.

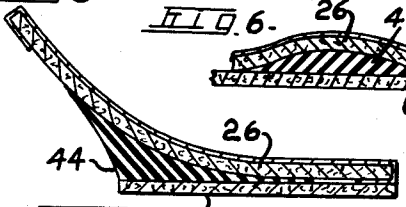

FIG. 6.

FIG. 3.

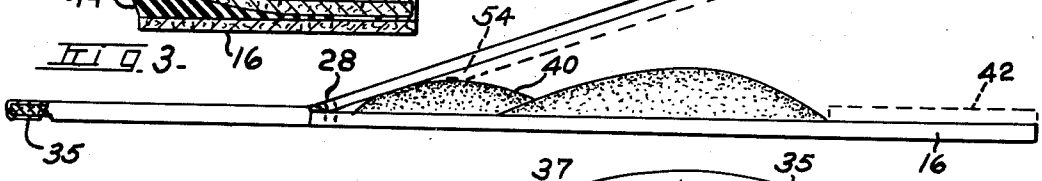

FIG. 4.

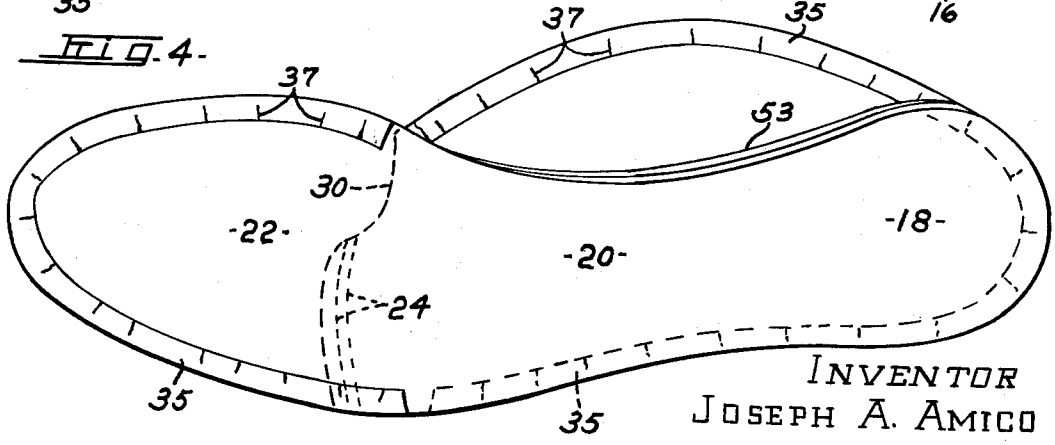

INVENTOR
JOSEPH A. AMICO
BY F. P. Keiper
ATTORNEY

United States Patent Office 2,732,636 Patented Jan. 31, 1956

2,732,636

ARCH SUPPORT CONSTRUCTION

Joseph A. Amico, Rochester, N. Y.

Application July 14, 1952, Serial No. 298,724

5 Claims. (Cl. 36—71)

This invention relates to corrective shoes, and more particularly to a shoe having built-in facilities for readily varying and shifting metatarsal, arch support and other padding as may be required.

The invention is an improved built-in construction incorporating substantially the principles of my copending applications Serial No. 438, filed January 3, 1948, and Serial No. 142,233, filed February 3, 1950, now issued as Patents No. 2,613,455 and No. 2,613,456 respectively on October 14, 1952, such applications disclosing two forms of supports adapted to be removably positioned within the shoe. The present invention is directed to an improvement thereover, in which through a hinged member secured to a foundation insole adapted to form a permanent part of the shoe, various metatarsal, arch support and heel pads may be inserted beneath the hinged member from time to time, and altered as to position, resiliency, and supporting thickness, to suit the varying conditions or needs of the individual wearer.

The above and other novel features of the invention will appear more fully hereinafter when taken in conjunction with the accompanying drawings. It is expressly understood that the drawings are employed for purposes of illustration only and are not designed as a definition of the limits of the invention, reference being had for this purpose to the appended claims.

In the drawings, wherein like reference characters indicate like parts:

Figure 1 is a side elevation partly cut away to show a shoe constructed with the built-in arch support construction;

Figure 2 is a plan view of the insole construction with portions cut away;

Figure 3 is a side elevation of the insole construction opened for adjustment;

Figure 4 is a bottom plan view of the insole construction;

Figure 5 is a sectional view taken substantially on the line 5—5 of Figure 2; and

Figure 6 is a sectional view taken substantially on the line 6—6 of Figure 2.

In the drawings, there is shown a shoe construction comprising the usual outer sole 10, which may be of leather or other suitable composition, heel 12, and upper 14. Located upon the sole 10 is what may be termed a foundation insole 16, overlying the sole 10 from toe to heel, such foundation insole being of one piece and formed of a suitable thickness of leather or other material of suitable strength and similar characteristics.

The foundation insole has the usual heel portion 18, connecting shank section 20, and ball portion 22. To the ball portion, at the point of greatest width, there is stitched along preferably curved lines 24 as indicated, a member 26 of leather or other material of similar characteristics, the same being feathered along its forward edge as at 28 to join the foundation insole with a smooth surface effect. The stitching extends from the outside to the center or slightly beyond center of the ball portion

of the foundation insole, the member 26 being cut away readwardly as at 30 on the inside.

The member 26 is provided with a wing portion 32 formed as an integral extension along the inside of the shank portion 34, which portion extends rearwardly to the heel portion. The member 26, and the ball portion of the foundation insole, are preferably covered with a thin skin of leather secured in place by suitable means such as rubber cement, such thin skin lying over the entire surface of the foundation insole forward of the member 26 and over the entire upper surface of the member 26. The marginal edges of the skin may be folded under as at 35, and suitably slit at intervals as at 37 to assist in forming a fit around the curved marginal edges.

The construction thus described is positioned within the shoe covering or superimposed over the sole from toe to heel, and the foundation sole may be cemented, stitched, or otherwise permanently secured in place. The structure thus provided permits the location between the member 26 and the foundation sole of any corrective pads. A metatarsal pad 40 may be located immediately to the rear of the curved stitching, the stitching being on a curve concave to the rear to permit maximum forward adjustment. A heel pad of rubber or rubber and cork composition 42 may be laid in place upon the foundation insole. An arch support pad or wing cookie of substantially obtuse triangular midsection as shown in Figure 5, may be positioned on the inside of the shank region, the same being shaped to fit beneath the wing, with its edge 44 contoured to conform to the inside curvature 46 of the shank of the foundation insole and the marginal edges 48 and 50 being shaped to give the desired effect, with such cross-sectional shape as may be required by conditions. Such wing cookie may be formed of rubber composition offering desired resiliency and support.

The under surface of the member 26 may be, if desired, further provided with a cushion layer of rubber composition 52, the same having an edge contour 53 similar to that of the shank and heel portion of the foundation sole. Such pad may terminate at 54 in a feathered edge. Such a pad is secured in place as by rubber cement or by other suitable means.

In practice, the skin covering will be formed from a thin cut of dry absorbent clay-impregnated sole leather secured in place by a coating of rubber cement, and the metatarsal pad, cookie, heel support pad and cushion will preferably be utilized in a manner similar to that set forth in my copending applications aforesaid, the present invention being directed to a construction adapted to be a permanent insole construction built in as a part of the shoe, the member 26 being liftable from the foundation insole to provide access to the supports and permit change and adjustment as conditions may be required by the wearer.

The member 26, being hinged upon the outside half by the stitches 24, is hinged on the side least subject to deformation by the various supports placed therein, so that minimum strain is placed upon the hinge connection, and the member 26 maintains its proper alignment over the foundation sole at all times. In this respect, it will be observed that the wing cookie having substantial thickness where a high degree of arch support is required, is located principally upon the inside side of the foundation insole, whereas the principal support on the outside is the metatarsal pad, which in practice is often dispensed with and does not assume very great thickness. The hinge member as thus attached to the foundation insole forms a pair of spaced members not liable to slip laterally with respect to one another, whereby, whether the pads be secured lightly in place as by adhesive means

or otherwise, have no tendency to shift when once placed in position.

While a single form of the invention is disclosed, which may be provided with varying combinations of pads as set forth, it is to be understood that the invention is not limited thereto. As various changes in construction and arrangement may be made without departing from the spirit of the invention, as will be apparent to those skilled in the art, reference will be had to the appended claims for a definition of the limits of the invention.

What is claimed is:

1. In an arch support construction for a shoe, a sole, an upper, a foundation insole superimposed over said sole, having ball shank and heel portions, said foundation insole having secured to the ball portion along a transverse region of maximum width thereof a hinged member, stitching extending from the outside of the foundation insole to substantially a midpoint thereof along a curved line concave toward the heel portion, for securing said member to said insole, said hinged member being free from the foundation insole on the inside side thereof, said member having an outside contour similar to the outside corresponding contour of said foundation member, and an inside contour including a wing arch support extension, a skin of thin dry absorbent clay-impregnated sole leather covering the upper side of said member and the upper side of the portion of the foundation sole forward of said member, said skin having edges turned under the edges of said member and foundation sole, rubber cement securing said skin to said member and foundation sole, a metatarsal pad positioned on said foundation sole beneath said member, immediately to the rear of said stitching and with its forward edge nesting in the curvature of said stitching, a wing cookie positioned on said foundation sole along the inside shank portion, said cookie having a substantially obtuse triangular mid-cross-section and having one surface adapted to support the wing of said member, and another surface adapted to engage the inside upper adjacent the foundation insole shank and laterally of said wing extension, a cushion pad of rubber underlying the entire under side of said hinged member except said wing extension, and a heel pad of resilient material mounted upon the heel portion of said foundation insole.

2. In an arch support construction for a shoe, a sole, an upper, a foundation insole superimposed over said sole, having ball shank and heel portions, said foundation insole having secured to the ball portion along a transverse region of maximum width thereof a hinged member, stitching extending from the outside of the foundation insole to substantially a midpoint thereof along a curved line concave toward the heel portion, for securing said member to sail insole, said hinged member being free from the foundation insole on the inside side thereof, said member having an outside contour similar to the outside corresponding contour of said foundation member, and an inside contour including a wing arch support extension, a skin of thin dry absorbent clay-impregnated sole leather covering the upper side of said member and the upper side of the portion of the foundation sole forward of said member, said skin having edges turned under the edges of said member and foundation sole, rubber cement securing said skin to said member and foundation sole, a metatarsal pad positioned on said foundation sole beneath said member, immediately to the rear of said stitching and with its forward edge nesting in the curvature of said stitching, a wing cookie positioned on said foundation sole along the inside shank portion, said cookie having a substantially obtuse triangular mid-cross-section and having one surface adapted to support the wing of said member, and another surface adapted to engage the inside upper adjacent the foundation insole shank and laterally of said wing extension, and a heel pad of resilient material mounted upon the heel portion of said foundation insole.

3. In an arch support construction for a shoe, a sole, an upper, a foundation insole superimposed over said sole, having ball shank and heel portions, said foundation insole having secured to the ball portion along a line of maximum width thereof a hinged member, stitching extending from the outside of the foundation insole to substantially a midpoint, for securing said member to said insole, said hinged member being free from the foundation insole on the inside side thereof, said member having an outside contour similar to the outside corresponding contour of said foundation member, and an inside contour including a wing arch support extension, a skin of thin sole leather covering the upper side of said member and the upper side of the portion of the foundation sole forward of said member, rubber cement securing said skin to said member and foundation sole, and a wing cookie positioned on said foundation sole along the inside shank portion, said cookie having a substantially obtuse triangular mid-cross-section and having one surface adapted to support the wing of said member, and another surface adapted to engage the inside upper adjacent the foundation insole shank and laterally of said wing extension.

4. In an arch support construction for a shoe, a sole, an upper, a foundation insole superimposed over said sole, having ball shank and heel portions, said foundation insole having secured to the ball portion along a line of maximum width thereof a hinged member, stitching extending from the outside of the foundation insole to substantially a midpoint, for securing said member to said insole, said hinged member being free from the foundation insole on the inside side thereof, said member having an outside contour similar to the outside corresponding contour of said foundation member, and an inside contour including a wing arch support extension, a skin of thin sole leather covering the upper side of said member and the upper side of the portion of the foundation sole forward of said member, said skin having edges turned under the edges of said member and foundation sole, rubber cement securing said skin to said member and foundation sole, a metatarsal pad positioned on said foundation sole beneath said member, immediately to the rear of said stitching, and wing cookie positioned on said foundation sole along the inside shank portion, said cookie having a substantially obtuse triangular mid-cross-section and having one surface adapted to support the wing of said member, and another surface adapted to engage the inside upper adjacent the foundation insole shank and laterally of said wing extension.

5. In an arch support construction for a shoe, a sole, an upper, a foundation insole superimposed over said sole, having ball shank and heel portions, said foundation insole having secured to the ball portion along a line of maximum width thereof a hinged member, stitching extending from the outside of the foundation insole to substantially a midpoint, for securing said member to said insole, said hinged member being free from the foundation insole on the inside side thereof, said member having an outside contour similar to the outside corresponding contour of said foundation member, and an inside contour including a wing arch support extension, a skin of thin dry absorbent clay-impregnated sole leather covering the upper side of said member and the upper side of the portion of the foundation sole forward of said member, said skin having edges turned under the edges of said member and foundation sole, rubber cement securing said skin to said member and foundation sole, and a wing cookie positioned on said foundation sole along the inside shank portion, said cookie having a substantially obtuse triangular mid-cross-section and having one surface adapted to support the wing of said member, and another surface adapted

to engage the inside upper adjacent the foundation insole shank and laterally of said wing extension.

References Cited in the file of this patent

UNITED STATES PATENTS

1,694,353	Messler	Dec. 4, 1928
1,976,441	Feldman	Oct. 9, 1934
2,033,758	Cronan et el.	Mar. 10, 1936
2,304,384	Stemmons	Dec. 8, 1942

FOREIGN PATENTS

462,514	Germany	July 13, 1928