May 4, 1965 E. BOHLINGER ETAL 3,181,217

JEWELRY SHORTENER LOCK

Filed Oct. 3, 1963

2 Sheets-Sheet 1

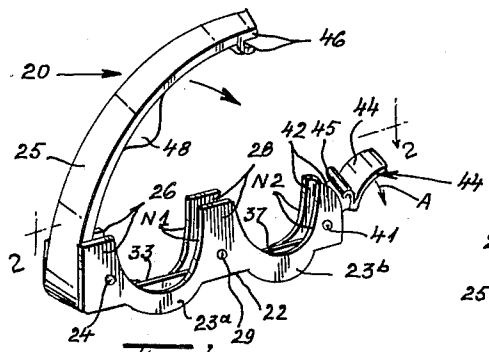

Fig. 1.

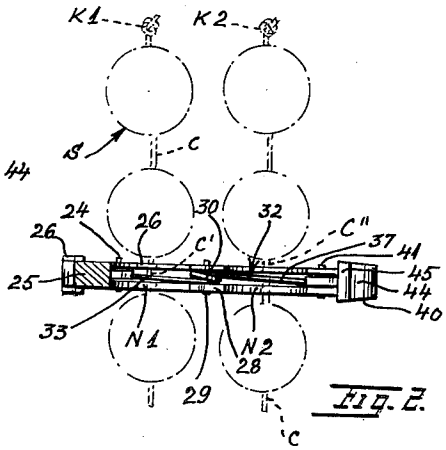

Fig. 2.

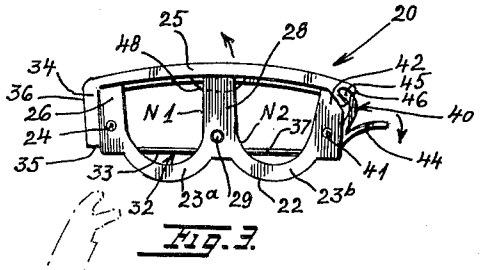

Fig. 3.

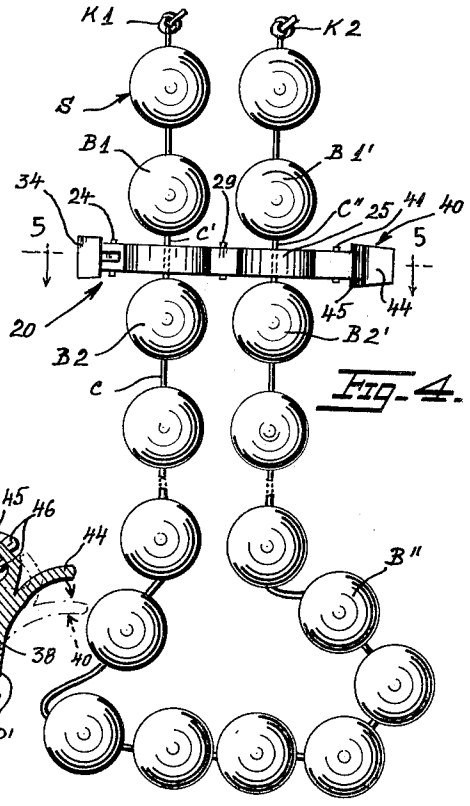

Fig. 4.

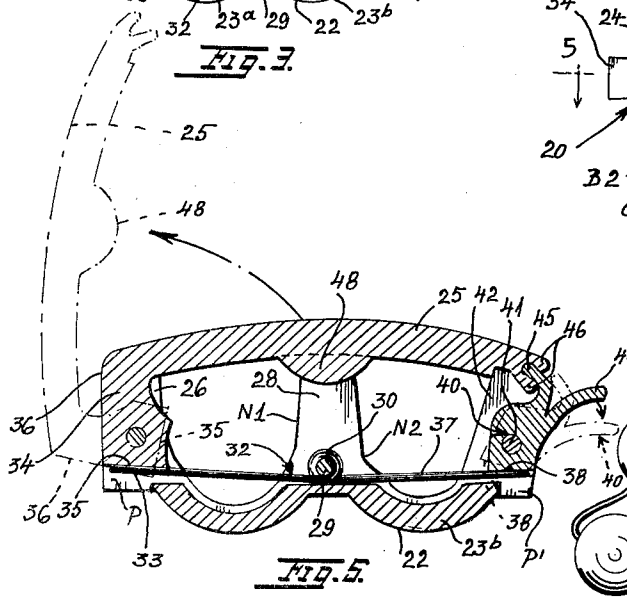

Fig. 5.

INVENTORS
ERNST BOHLINGER
SAMUEL FRIEDMAN

BY Polachek & Saulsbury

ATTORNEYS

May 4, 1965 E. BOHLINGER ETAL 3,181,217

JEWELRY SHORTENER LOCK

Filed Oct. 3, 1963 2 Sheets-Sheet 2

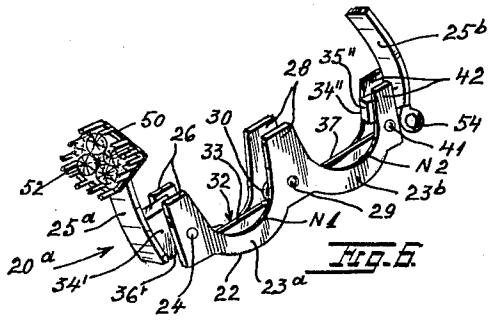

Fig. 6.

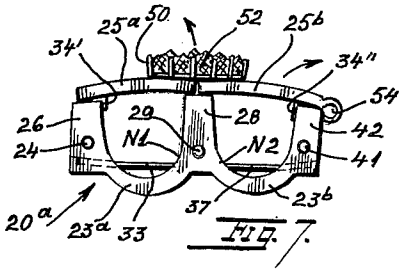

Fig. 7.

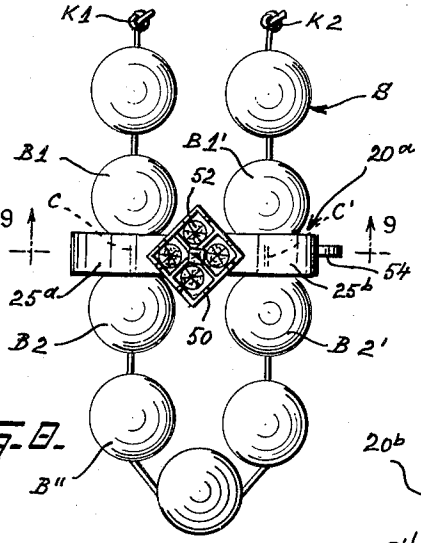

Fig. 8.

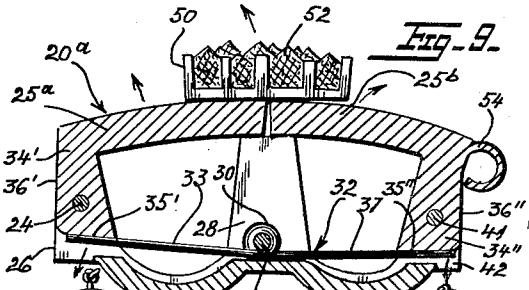

Fig. 9.

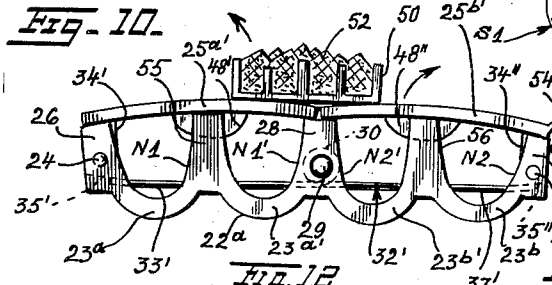

Fig. 10.

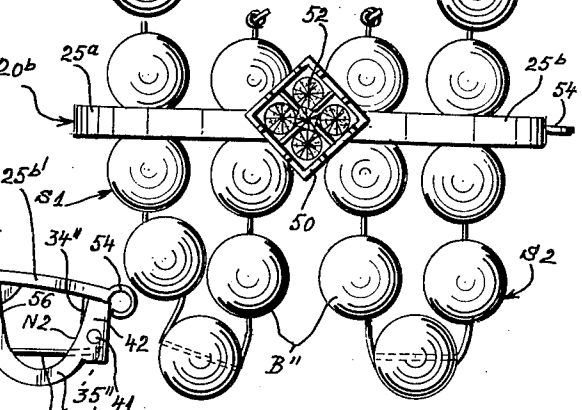

Fig. 11.

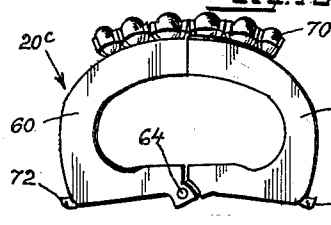

Fig. 12.

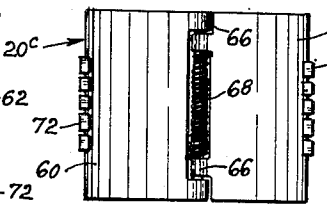

Fig. 13.

INVENTORS
ERNST BOHLINGER
SAMUEL FRIEDMAN
BY Polachek & Saulsbury
ATTORNEYS

United States Patent Office 3,181,217 Patented May 4, 1965

3,181,217

JEWELRY SHORTENER LOCK

Ernst Bohlinger, 31—15 25th Ave., Astoria, N.Y., and Samuel Friedman, 556 Ave. Z, Brooklyn, N.Y.

Filed Oct. 3, 1963, Ser. No. 313,549
1 Claim. (Cl. 24—116)

This invention relates to the art of jewelry clasps and more particularly concerns a clasp for adjusting in length necklaces and the like.

According to the invention there is provided a clasp including a body member with two notches. In each of these notches there can be engaged one end of a string of beads, pearls and the like. A clasp bar is pivotally mounted at one end of the body member to close down on the body member. A catch member is pivotally mounted at the other end of the body member to engage the clasp bar in a closed position. A coil spring is seated inside the body member. This spring has opposite ends engaged on pivoted ends of the clasp bar and catch member. The spring holds the clasp bar in an open position when the bar is opened and holds the catch member in a closed position when the clasp bar is closed.

In another form of the invention the pivoted clasp bar is short and supports a jewel crown or other ornament on one end. The spring in the yoke serves to hold the clasp bar in open and closed positions. The clasp bar serves to close one notch in the yoke. Another short pivoted clasp bar is provided for closing the other notch in the yoke. The spring also holds the other clasp bar in open and closed positions. In addition, the jewel crown on the end of the first clasp bar serves as a catch member to hold the other clasp bar closed.

In a further form of the invention the yoke has four notches to engage ends of two strings of beads or for adjustably shortening and lengthening the two strings independently of each other. Each of the two clasp bars serves to close two of the four notches.

It is therefore a principal object of the invention to provide a jewelry clasp for adjustably shortening and lengthening a necklace by engaging ends thereof at different selected points, the clasp including a body member having notches to engage the ends of the necklace, one or two pivotally mounted clasp bars to close the notches, spring means to hold the clasp bar or bars in closed position and a catch member to engage an end of one of the clasp bars.

A further object is to provide a jewelry clasp including a body member having notches for engaging ends of one or two strings of beads, a pair of pivoted clasp bars to close the notches, and spring means to hold the clasp bars in open and closed positions.

Another object is to provide a pivoted clasp bar in a jewelry clasp with an ornamental member which serves as catch means for another pivoted clasp bar in the clasp.

For further comprehension of the invention, and of the objects and advantages thereof, reference will be had to the following description and accompanying drawings, and to the appended claim in which the various novel features of the invention are more particularly set forth.

In the accompanying drawings forming a material part of this disclosure:

FIGURE 1 is a perspective view of a jewelry clasp embodying one form of the invention in an open position,

FIG. 2 is a horizontal sectional view of the open jewelry clasp, taken on line 2—2 of FIG. 1, parts of an associated necklace being shown in dot-dash lines,

FIG. 3 is a side elevational view of the clasp in a closed position,

FIG. 4 is a top plan view of the closed clasp shown with parts of an associated necklace,

FIG. 5 is a sectional view on an enlarged scale taken on line 5—5 of FIG. 4, the necklace being omitted, the clasp being shown in dot-dash lines in open position,

FIG. 6 is a perspective view of another jewelry clasp in open position,

FIG. 7 is a side elevational view of the clasp of FIG. 6 in closed position,

FIG. 8 is a top plan view of the closed clasp of FIG. 6 shown with parts of an associated necklace,

FIG. 9 is a sectional view on an enlarged scale taken on line 9—9 of FIG. 8, the necklace being omitted,

FIG. 10 is a side elevational view of still another jewelry clasp shown in closed position,

FIG. 11 is a top plan view of the closed clasp of FIG. 10, shown with parts of two string of beads,

FIG. 12 is an end elevational view of still another modified form of the invention, and

FIG. 13 is a bottom plan view thereof.

Referring to the drawings, there is shown in FIGS. 1 to 5, a jewelry clasp 20 including an elongated body member 22 comprising a pair of individual side bars, each bar having a pair of arcuate intermediate portions 23^a, 23^b defining notches N1, N2. At one end of the yoke is a pintle 24 pivotally engaging one end of a curved clasp bar 25 between spaced walls 26 at the end of the body member. The body member has spaced center or intermediate walls 28 at the bottom of which is a transverse pintle 29. On this pintle is engaged the center loop 30 of a coil spring 32. One free end 33 of the spring is engaged underneath end wall 34 of the bar 25 at bottom face 35 when the bar is closed as shown in FIG. 5. The end 33 of the spring is engaged under end face 36 of wall 34 when the bar is opened as indicated by dotted lines in FIG. 5. The spring holds the bar in the open position by engagement at face 36. The spring also holds the bar in a closed position by engagement at face 35.

The other end 37 of spring 32 is engaged under bottom face 38 of a catch member 40. This catch member is pivotally mounted on a pintle 41 secured in spaced end walls 42 of the body member. The catch member has an outwardly extending finger piece 44 which can be manually pressed outwardly to turn the catch member slightly clockwise as indicated by arrow A in FIG. 1. The catch member has a tongue 45 which engages in jaws 46 formed at the free end of clasp bar 25. The catch member can be turned against tension in spring end 37 to disengage tongue 45 from jaws 46. If the catch member is released after being manually turned down from the position of FIG. 1 and while the clasp bar is closed down on the body member, then tongue 45 will engage in jaws 46 to hold the clasp bar closed. Spring end 33 will assist and cooperate with spring end 37 since spring end 33 will tend to hold the clasp bar down on the body member while spring end 37 keeps the catch member from turning and thus holds the tongue 45 engaged in jaws 46.

The clasp bar may have an intermediate plate-like projection 48 which can engage between intermediate walls 28 of the body member to prevent lateral movement of the clasp bar with respect to the body member and catch member.

FIGS. 2 and 4 show a necklace or string S of beads having ends engaged in notches N1, N2 of the body member. The ends of the wire or cord C of the string of beads or necklace S may have knots K1, K2. The cord portions C', C'' will engage in the notches while adjacent end beads such as B1, B2 and B1', B2' will be located on opposite sides of the clasp. The clasp bar 25 is shown in FIG. 4 closed down on the body member and thus securely locking ends of the necklace in the clasp. To lengthen or shorten the loop of the necklace defined by beads B'', less or more beads respectively at the free ends of the

necklace can be located beyond the clasp to provide corresponding more or less beads B'' in the loop.

The arcuate portions 23a and 23b of the body member terminate short of spaced end walls 26 and 42, respectively, to provide spaces P, P' into which the free ends 33, 37 of the spring can flex while the clasp bar is being opened and closed and while the catch member is turned to the clockwise position shown in dotted lines in FIG. 5.

FIGS. 6–9 show another clasp 20a in which parts corresponding to those of clasp 20 are identically numbered. Yoke 22 is the same as in clasp 20. Two clasp bars 25a, 25b are provided. These bars are shorter than bar 25 and each has a length about one half the length of the yoke 22. Spring end 33 engages under bottom face 35' of end wall 34' of bar 25a when the bar is closed as shown in FIG. 9, and engages under end face 36' when the bar is opened. The spring thus holds the bar in both open and closed positions. Spring end 37 engages under bottom face 35'' of end wall 34'' when the clasp bar 25b is in the closed position of FIG. 9 and engages under the end face 36'' when the clasp bar is open in the position of FIG. 6.

A catch member 50 in the form of a crown for mounting jewels 52 may be attached to the free end of bar 25a. This catch member will overlap the free end of bar 25b at the center of the yoke and help to hold this bar closed. Spring end 37 will effectively hold the bar 25b closed and crown 50 will serve as a safety catch to insure that the bar 25b cannot open unless bar 25a also opens. End beads B1, B1' and B2, B2' can be engaged at opposite sides of the clasp 20a as indicated in FIG. 8 while the cord portions C, C' are engaged in the notches of the yoke, closed by the clasp bars 25a, 25b.

The free ends of the clasp bars 25a, 25b overlay the upper ends of opposing center walls 28 of the yoke when the clasp bars are closed. The crown 50 can be grasped for opening bar 25a. Then the free end of clasp bar 25b can be grasped for opening this bar. A loop or eye 54 can be formed at the outer end of bar 25b to serve as handle means for pivoting the bar to open and closed positions. This eye can be used to engage another ornament on the clasp.

In FIGS. 10 and 11, the clasp 20b is similar to clasp 20a and corresponding parts are identically numbered. Yoke 22a is somewhat longer than the yoke 22 to provide four arcuate portions 23a, 23a' and 23b, 23b'. The additional arcuate portion 23a' adjacent to arcuate portion 23a provides another notch N1' adjacent to notch N1 to engage beads at the ends of bead string or necklace S1. Additional arcuate portion 23b' adjacent to arcuate portion 23b defines another notch N2' which with notch N2 engages the end beads of second bead string or necklace S2. The yoke 22a is provided with additional opposing walls 55 between walls 26 and 28 and with additional opposing walls 56 between walls 28 and 42. The free ends of the clasp bars 25a' and 25b' which are longer than bars 25a, 25b, overlay center walls 28. Intermediate walls 55 and 56 support the centers of the clasp bars and may engage depending clasp bar plates 48', 48'' therebetween.

The ends 33' and 37' of spring 32' are longer than ends 33 and 37 of spring 32 to engage under the bottom faces 35', 35'' of the catch bar walls 34', 34''. The spring ends serve to hold the catch bars in open and closed positions as explained in connection with clasp 20a.

If desired, the outer or top surfaces of the catch bars 25, 25a, 25b, 25a' and 25b' may be provided with ornamentation, engraving or other suitable decorations.

In the modified form of the invention shown in FIGS. 12 and 13, the clasp 20c shown herein comprises two

semi-circular or arcuate-shaped body portions 60 and 62 hingedly secured together at one end by a pintle 64 passing through aligned knuckles 66 and 68 respectively on the body portions. A coil spring 70 sleeved around the pintle urges the body portions toward each other into closed condition as shown in FIG. 12. The other ends of the body portions are flat and abut each other. An elongated frame for mounting a cluster of pearls 72 is secured at one end to the other end edges of body portion 62 and overlaps the end edge of body portion 60 when closed. Feet 72 on the outside of the body portions serve for supporting the clasp on a horizontal supporting surface.

In using the clasp 20c, the cord portion of a necklace will engage in the space between the body portions while adjacent beads will be located on opposite sides of the clasp. The cluster of pearls can be grasped for opening the body portions.

The various forms of clasps described all serve the function of enabling adjustable lengthening or shortening of loops of necklaces in a quick, convenient and safe manner.

The clasps can be made of precious or base metals, or may be made of base metals plated with various metals.

While we have illustrated and described the preferred embodiments of our invention, it is to be understood that we do not limit ourselves to the precise constructions herein disclosed and that various changes and modifications may be made within the scope of the invention as defined in the appended claim.

Having thus described our invention, what we claim as new, and dseire to secure by United States Letters Patent is:

A jewelry clasp for adjusting the length of a necklace, comprising an elongated body member formed by a pair of individual side bars, each bar having a pair of spaced transverse notches therein, pivot pins connecting said bars at their ends and midway thereof and being the only connection therebetween, a clasp bar mounted on one end pivot pin and provided with spaced jaws at its opposite end and a depending spacing lug intermediate its ends receivable between said bars midway of their lengths, a combined catch member and finger piece pivotally mounted on the other end pivot pin for locking engagement between said spaced jaws when said clamp bar is in closed position, said transverse notches adapted to receive two end strands of a necklace, and a coil spring on said intermediate pivot pin having oppositely extending terminal ends resiliently engageable with said clasp bar and said catch member when in open and closed positions and contacting different portions of said clasp bar and catch member when they are in open and closed positions, respectively.

References Cited by the Examiner

UNITED STATES PATENTS

1,458,069	6/23	London	24—73.12
1,814,475	7/31	Kestenman.	
1,895,952	1/33	Wachenheimer	24—73.12
2,211,018	8/40	Levine	24—241
2,355,926	8/44	Rodriguez	24—241
2,599,321	6/52	Doran	63—2
3,094,754	6/63	Wayne	24—73

FOREIGN PATENTS

262,178	9/49	Switzerland.

DONLEY J. STOCKING, *Primary Examiner.*